Computer Desk

Assembly Instructions

If any parts are missing or damaged, please contact our customer service for assistance.

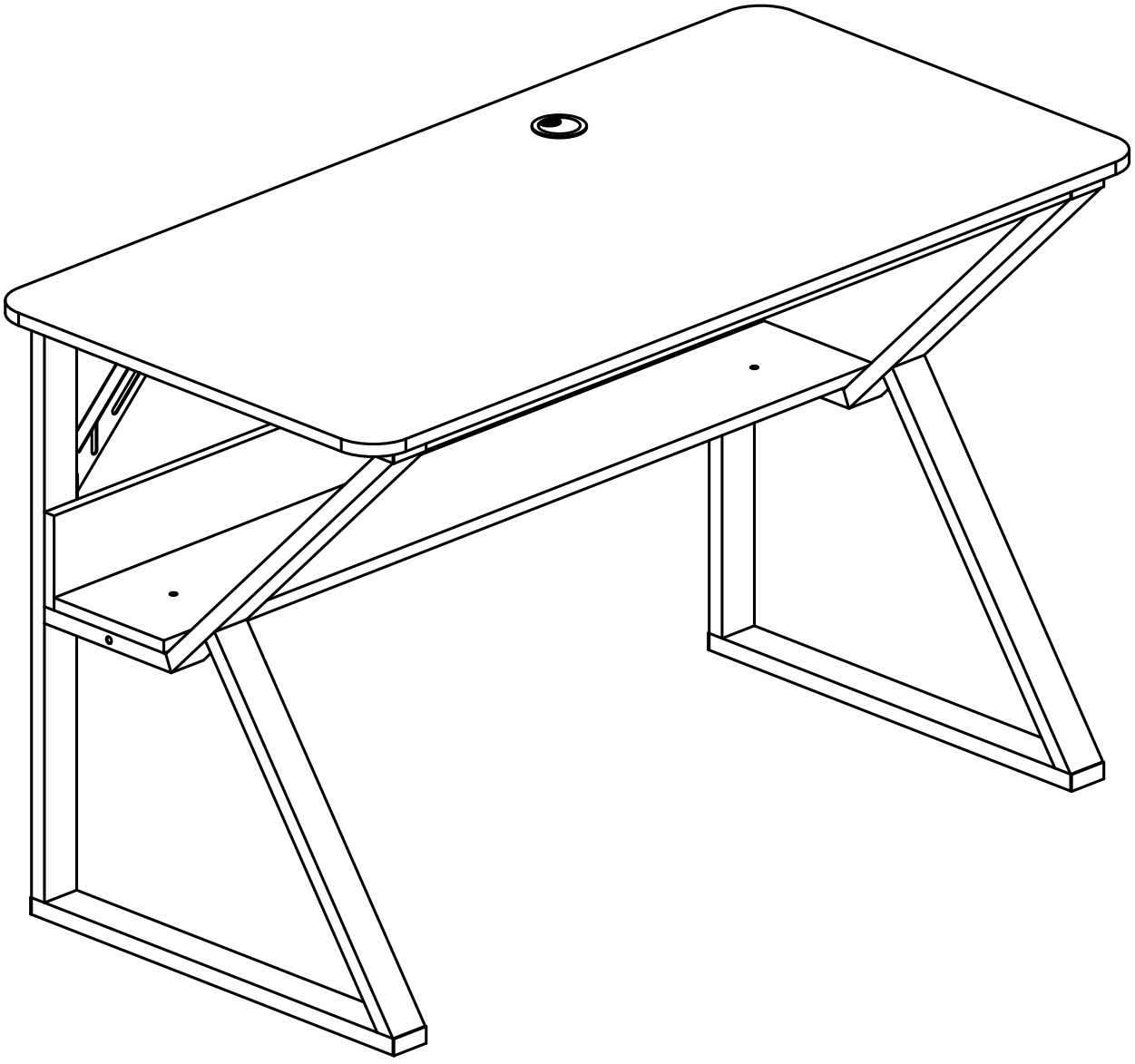

Assembly List

Please check all components and hardware against the parts list after opening the package. To avoid damage, we recommend preparing a padded area or spreading a carpet on the floor prior to assembly. For safety, **we recommend two people assemble this product together.**

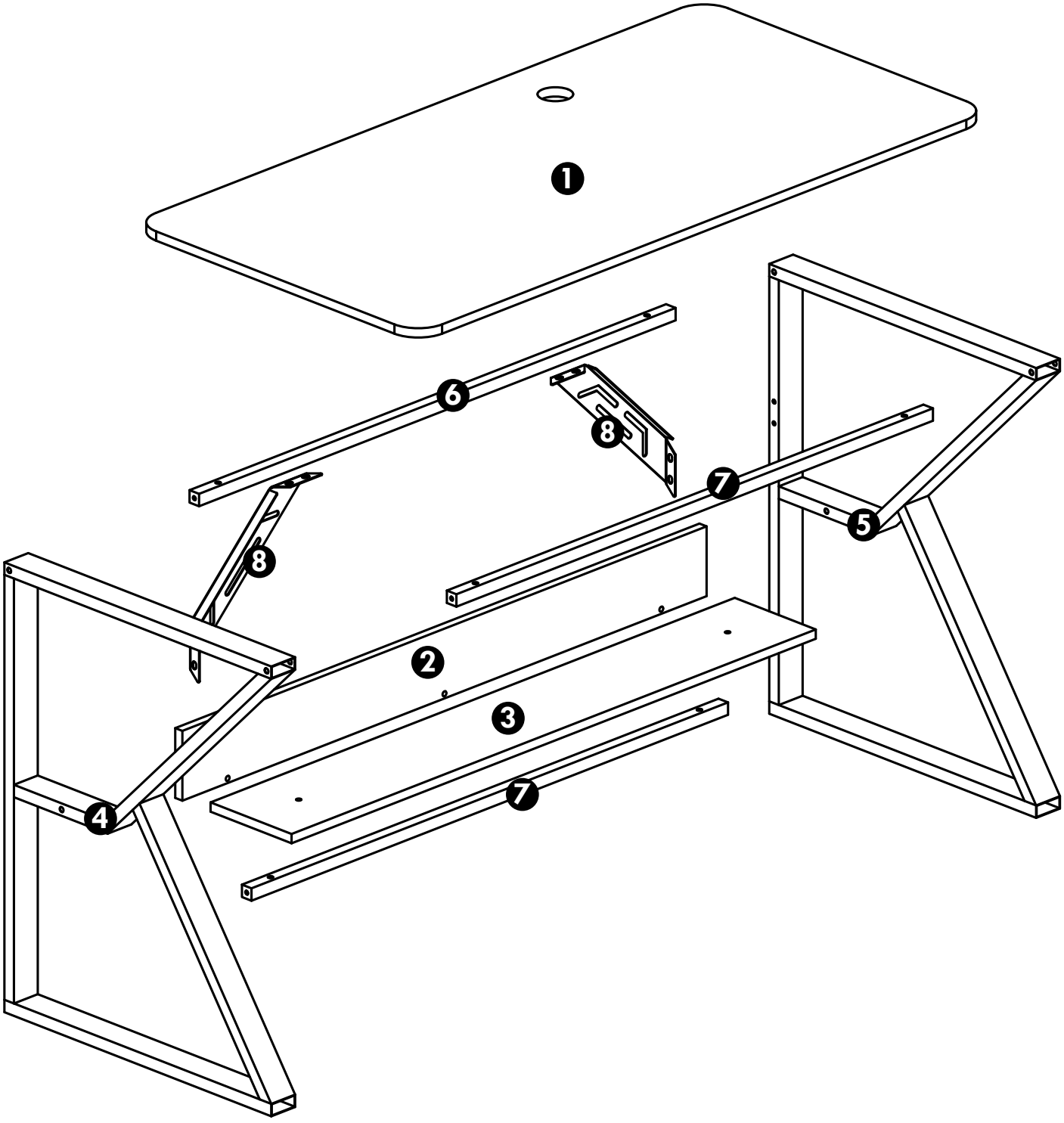

Hardware List (Please ensure all components are included before assembly)

A x6

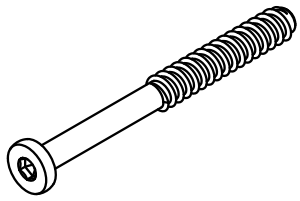

Long Screw

B x6

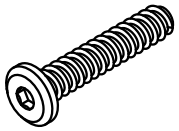

M6×35mm Bolt

C x8



M8×16mm Bolt

D x2



Nut

E x3

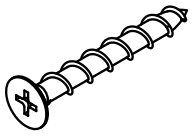

Screw

F x8

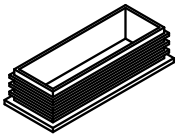

Plug

G x4

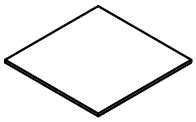

Anti-slip Pads

H x1

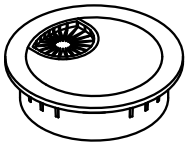

Cable Grommet Cover

I x1

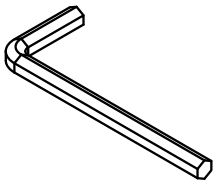

5#
Allen Key

J x1

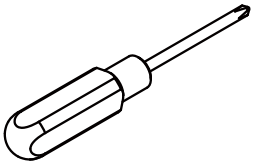

Screwdriver

Tips for Tightening Screws

If multiple screws are required in the same step, do not fully tighten them until all screws have been properly inserted and aligned. Once everything is in place, tighten them securely.

Step 1

First, insert 8 pieces of Component F into Steel Frames No. 4 and No. 5, then attach 4 Anti-slip Pads (G) to the bottom of Steel Frames No. 4 and No. 5.

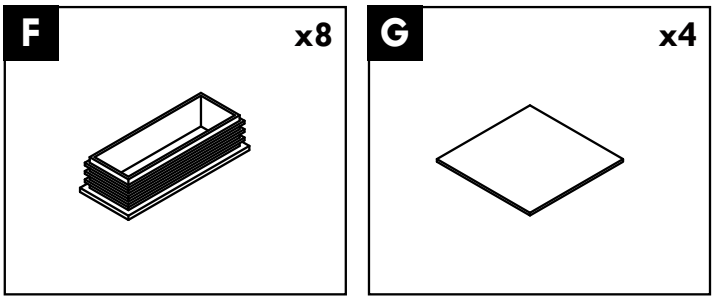

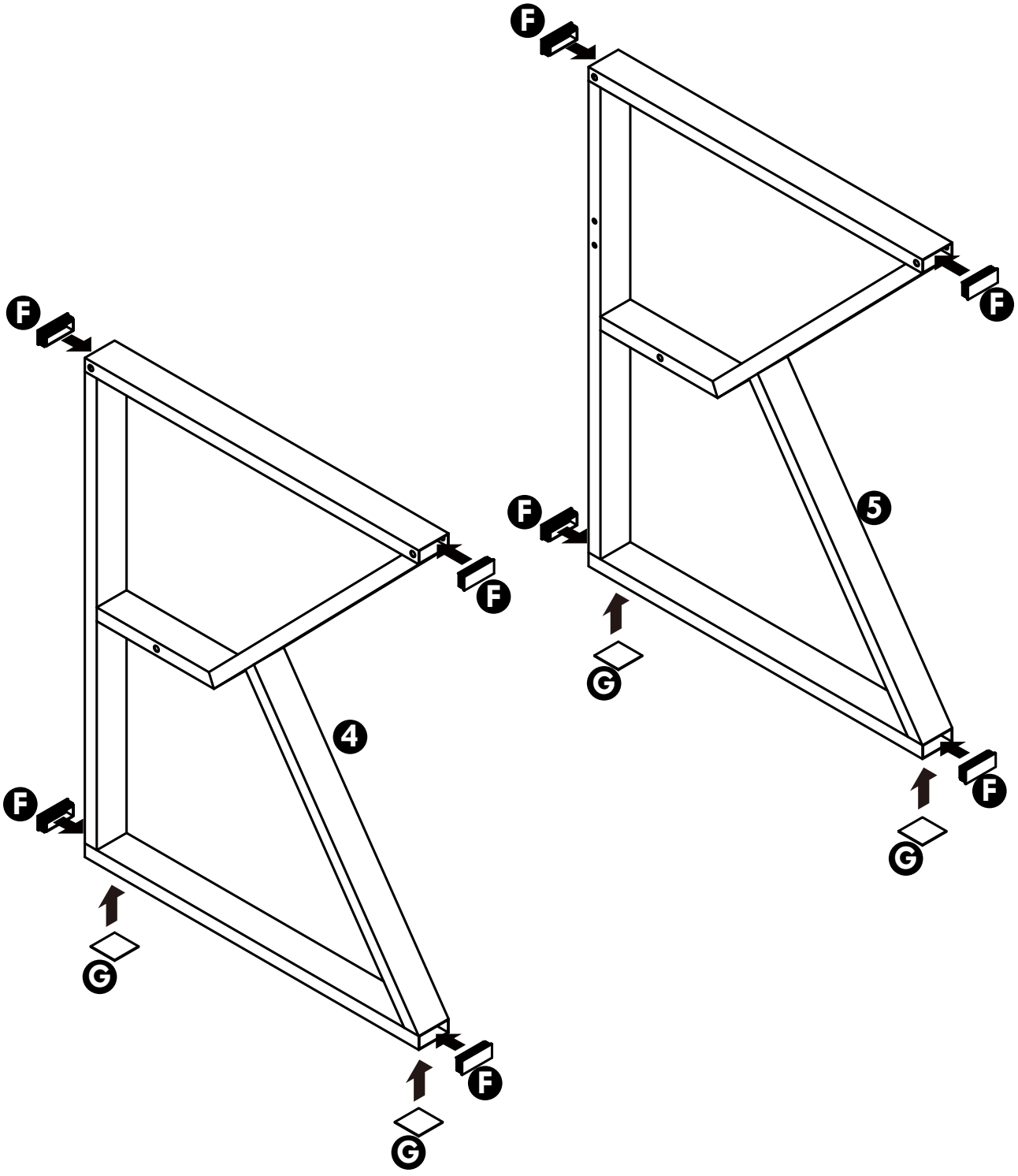

Step 2

Use 6 Long Screws (A) to connect the Support Rods (6 & 7) to the Side Frames (4 & 5).

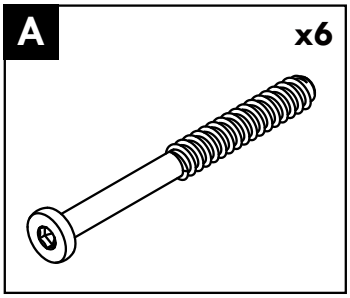

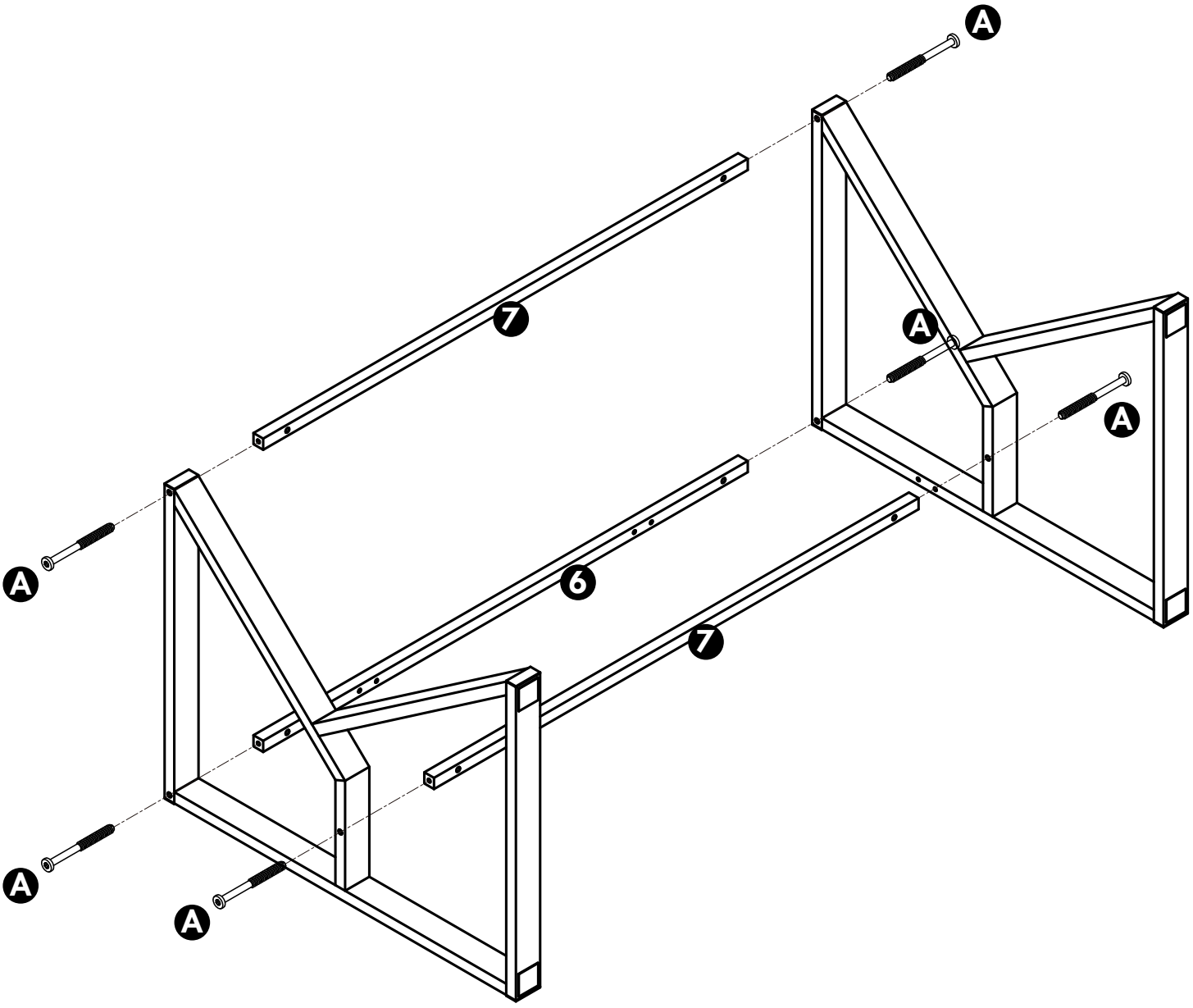

⚠ Attention

Do not fully tighten the screws until the frame assembly is complete.

Step 3

Use 8 Screws (C) to secure the support frame to the crossbars and steel frames.

C x8



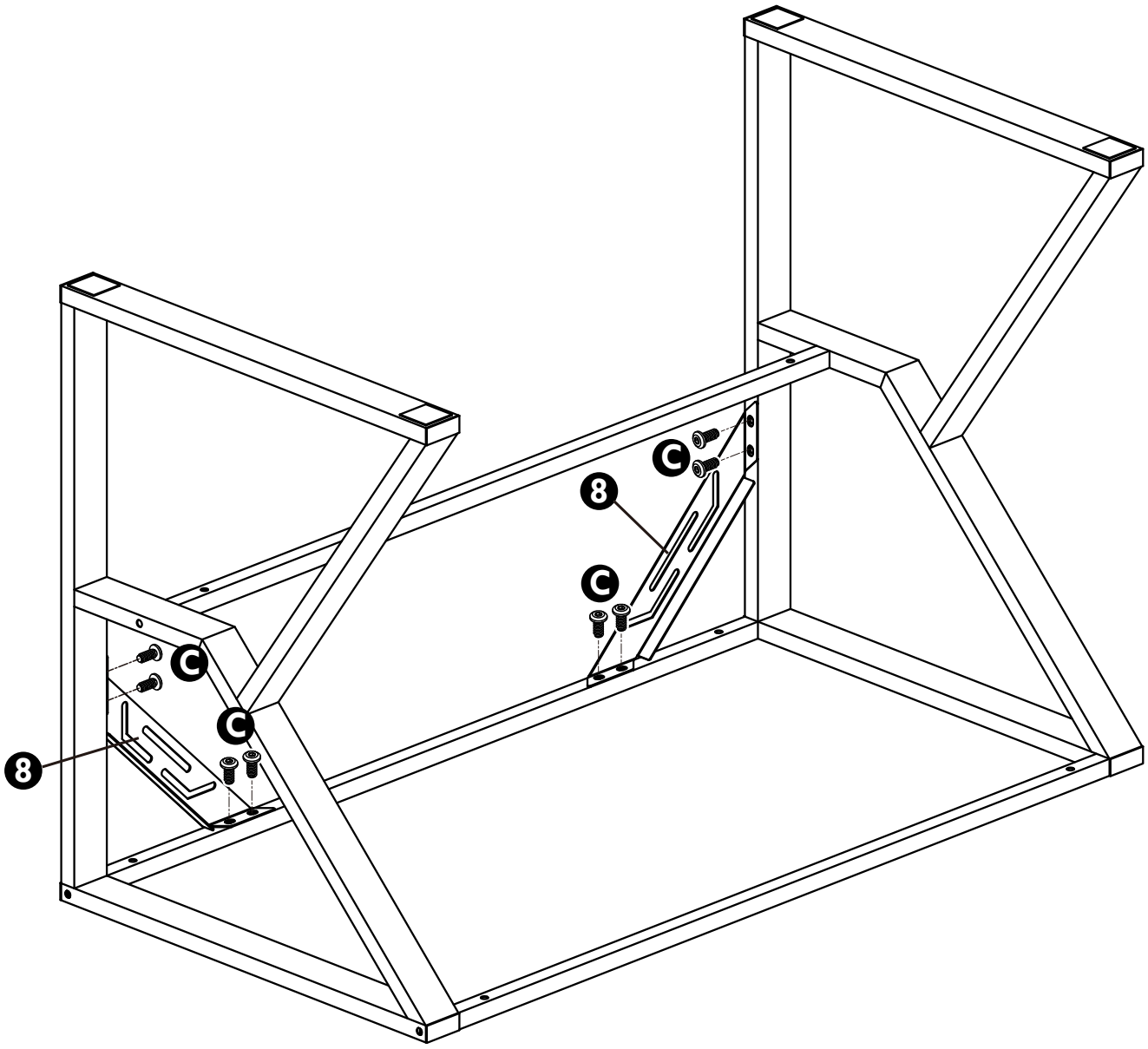

⚠ Attention

Do not fully tighten the screws until the frame assembly is completely finished.

Step 4

Use 3 Screws (E) to connect Component No. 2 and Component No. **3**.

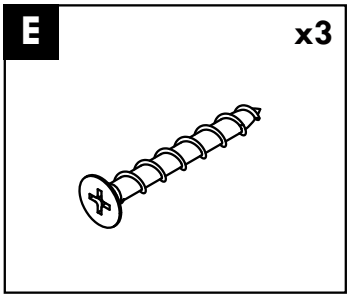

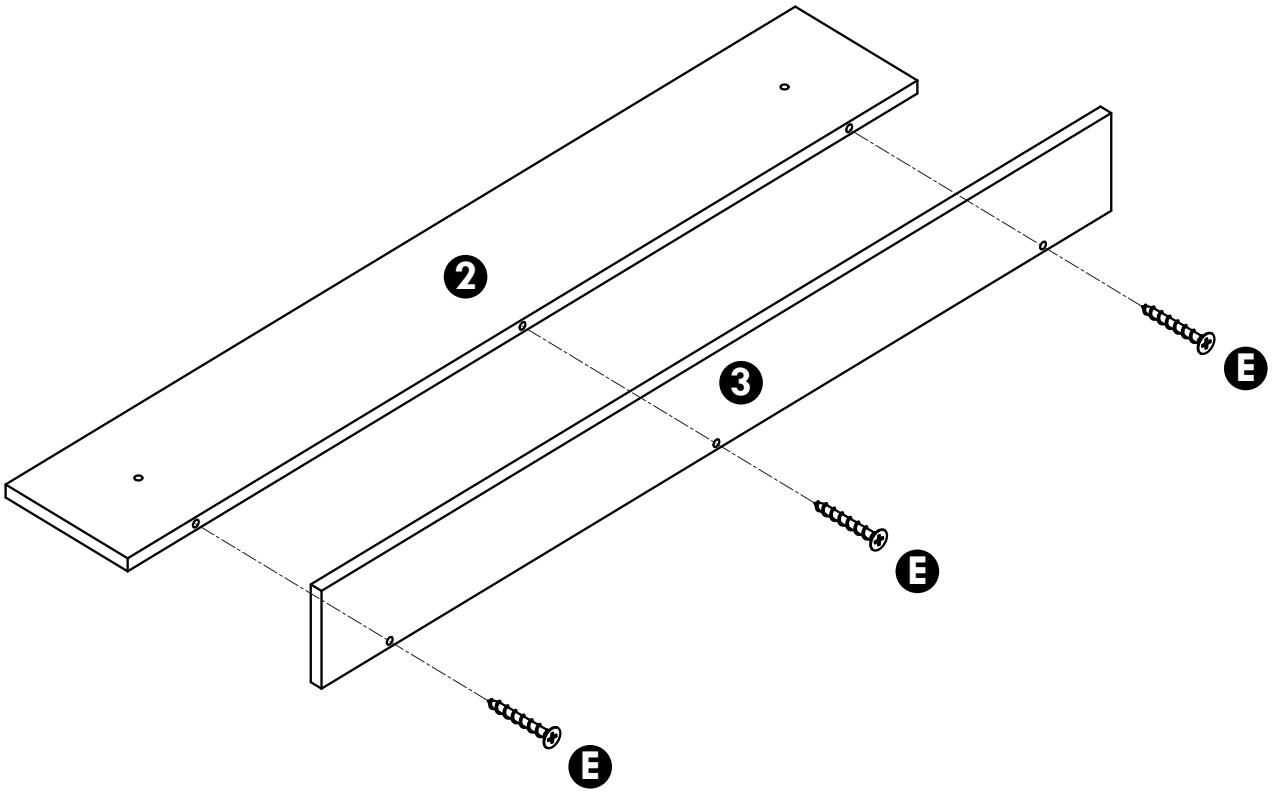

Step 5

Use 2 Screws (B) and 2 Nuts (D) to attach the Back Panel (3) to the frame.

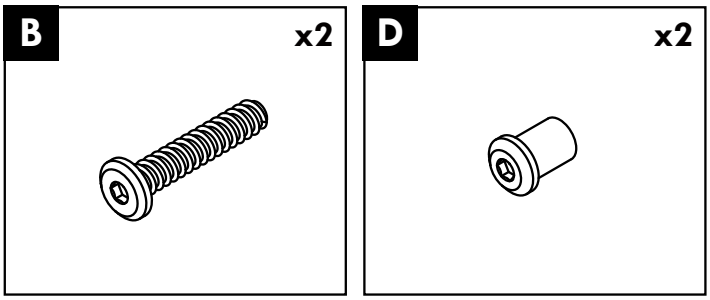

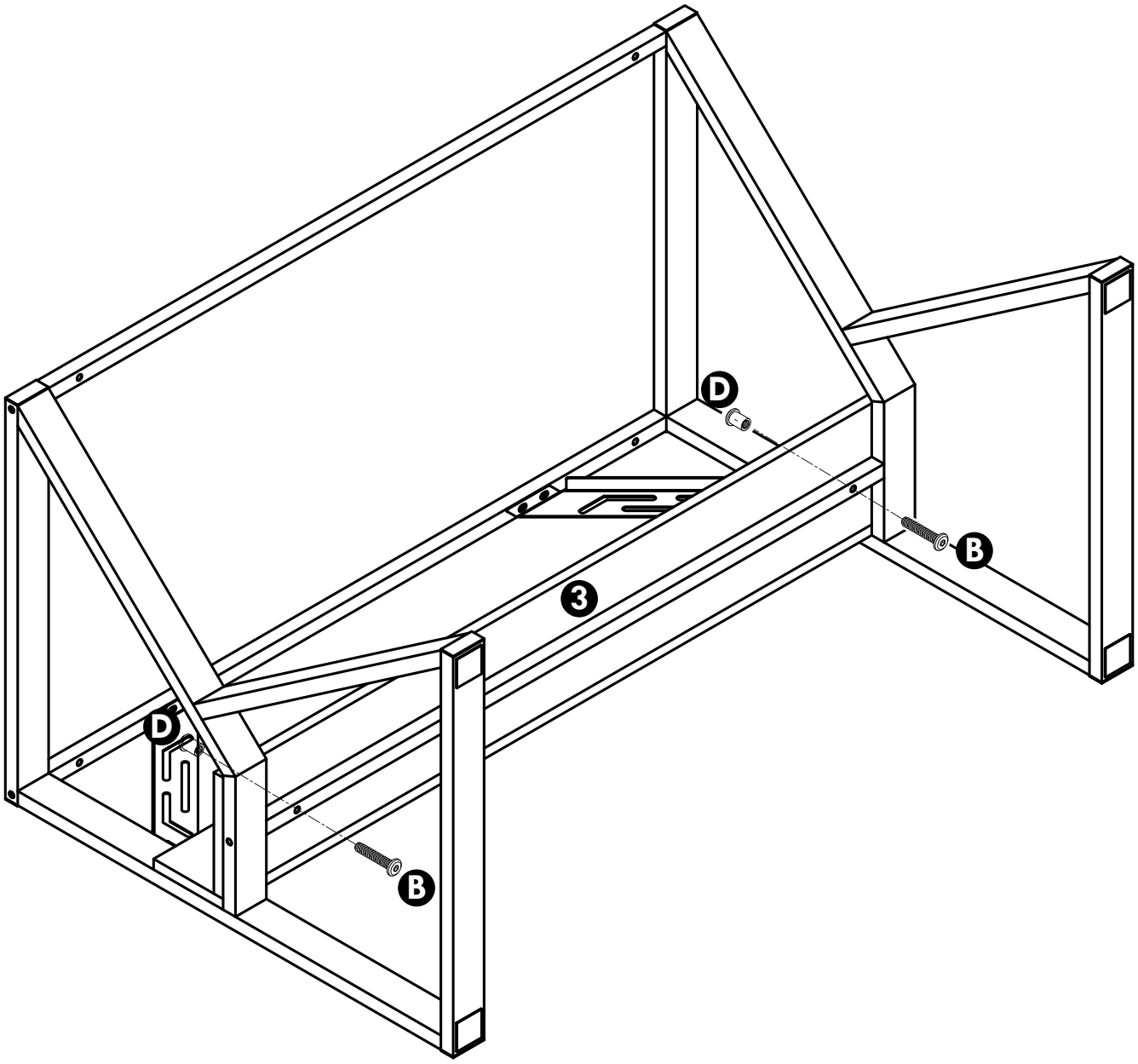

⚠ Attention

Do not fully t**ighten** the screws until the frame assembly is complete.

Step 6

Use 4 Screws (B) to connect Component No. 1 to the steel frame.

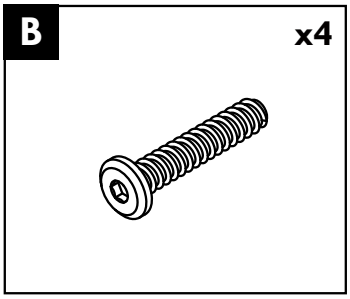

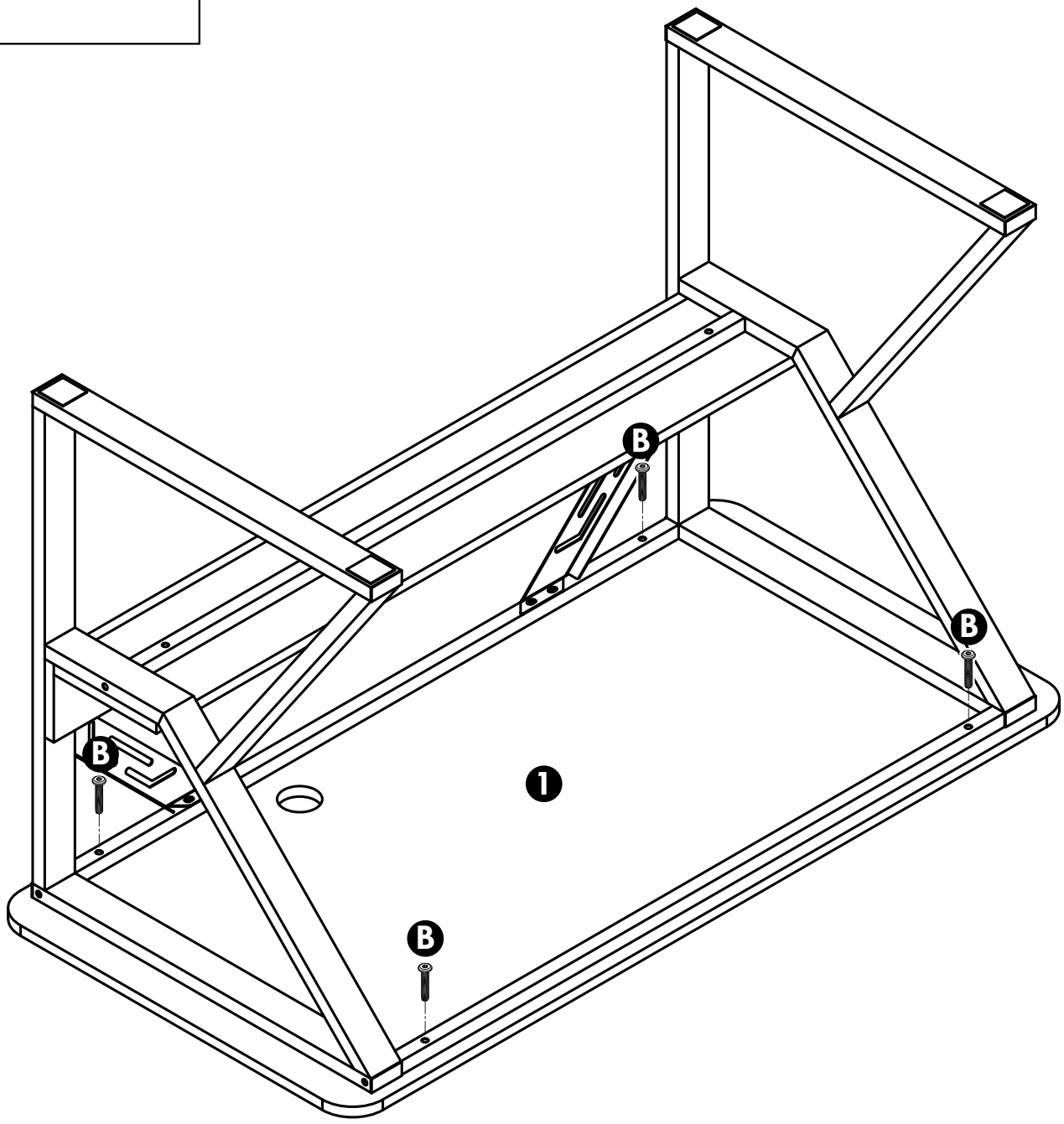

⚠ Attention

The frame assembly is now complete. Please fully tighten all screws.

Step 7

Install the Cable Grommet Cover (H) into the designated hole on Tabletop 1.

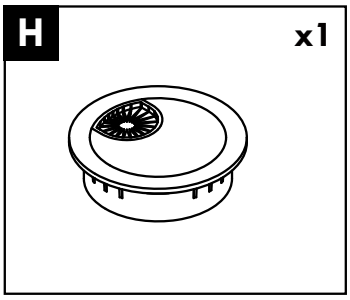

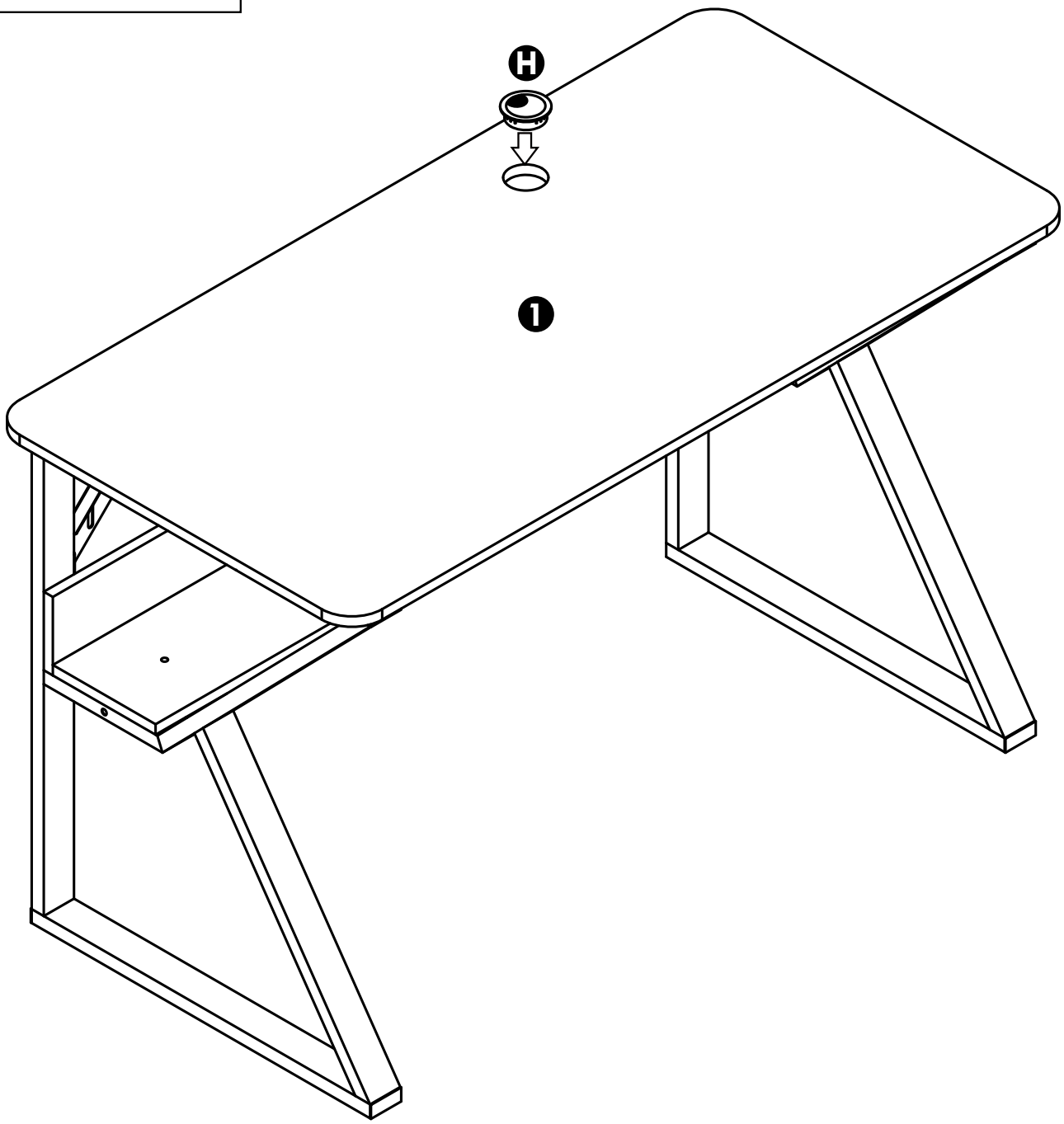

⚠ Attention

Assembly is now complete. Enjoy your new desk!