ASSEMBLY INSTRUCTIONS

HOD02- Executive Desk

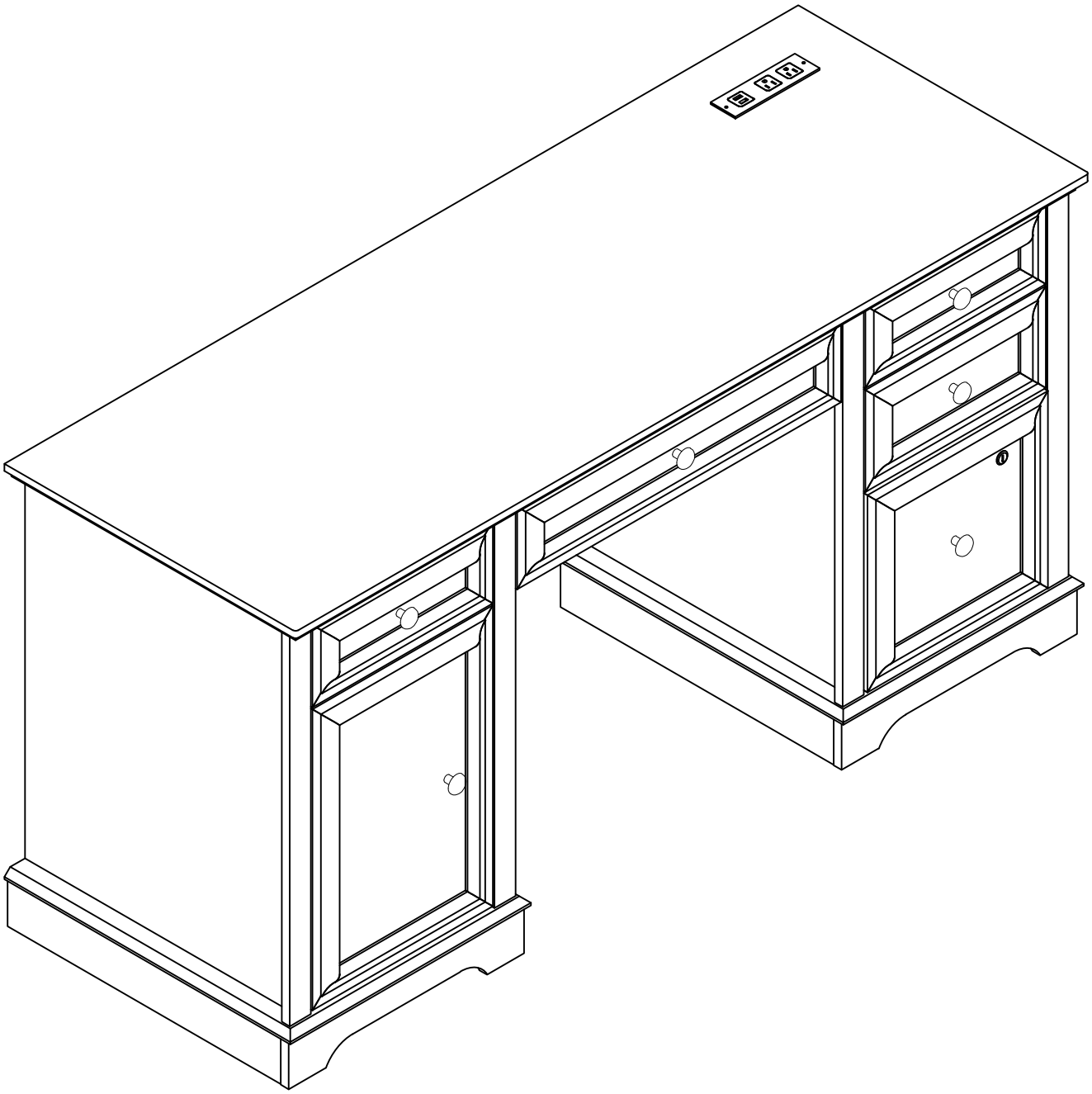

Thank you for purchasing our product!

Please refer and use this assembly instruction to assemble the product.

Contact our customer service department in case there are any missing or damaged parts or hardware.Please also tell us your "Order ID", We will solve for you as soon as possible.

EMAIL: support-cs@hkfoam.com

ASSEMBLY PREPARATION:

1. Remove all packaging materials, staples and packing straps from the carton.
2. Refer to Parts List and Hardware List and ensure they are correct before assembly.Contact customer service for missing parts.

3. Place all wooden parts on a clean, flat and soft surface (e.g. carpet or rug) to prevent parts from getting scratched.

SAFETY PRECAUTION:

1. Keep all hardware parts out of reach of children.

2. Dispose plas c packaging material immediately to avoid any risk of suffoca on to children and animals..

TIPS FOR ASSEMBLY:

1. Allow ample room for assembly and in close proximity to where product will be placed.

2. Assemble the product on a surface that does not scratch or damage the exterior gloss and finish of the furniture.

3. Iden fy all of the parts, hardware and quan es required for each step.

4. During assembly, do not over- ghten any fi ngs as this may cause damage.

5. DO NOT USE POWER TOOLS TO ASSEMBLE THIS PRODUCT.

6. Always place the product on a flat, level surface.

7. Do not sit or stand on the par ally assembled product; only use the product for which it is intended.

CARE AND MAINTENANCE:

- Use a slightly damp cloth to clean the product. Do not use bleach or abrasive cleaning material.

- Check all the fi ngs periodically and re- ghten as necessary. Do not use the product if any of the parts is damaged or broken.

- Never allow any kind of liquid to remain on your furniture. Absorp on can cause wood to warp or delaminate.

- Do not place hot items (e.g. hot drinks) directly onto the wood surface.

Part List

Please check if all the pieces listed below are received

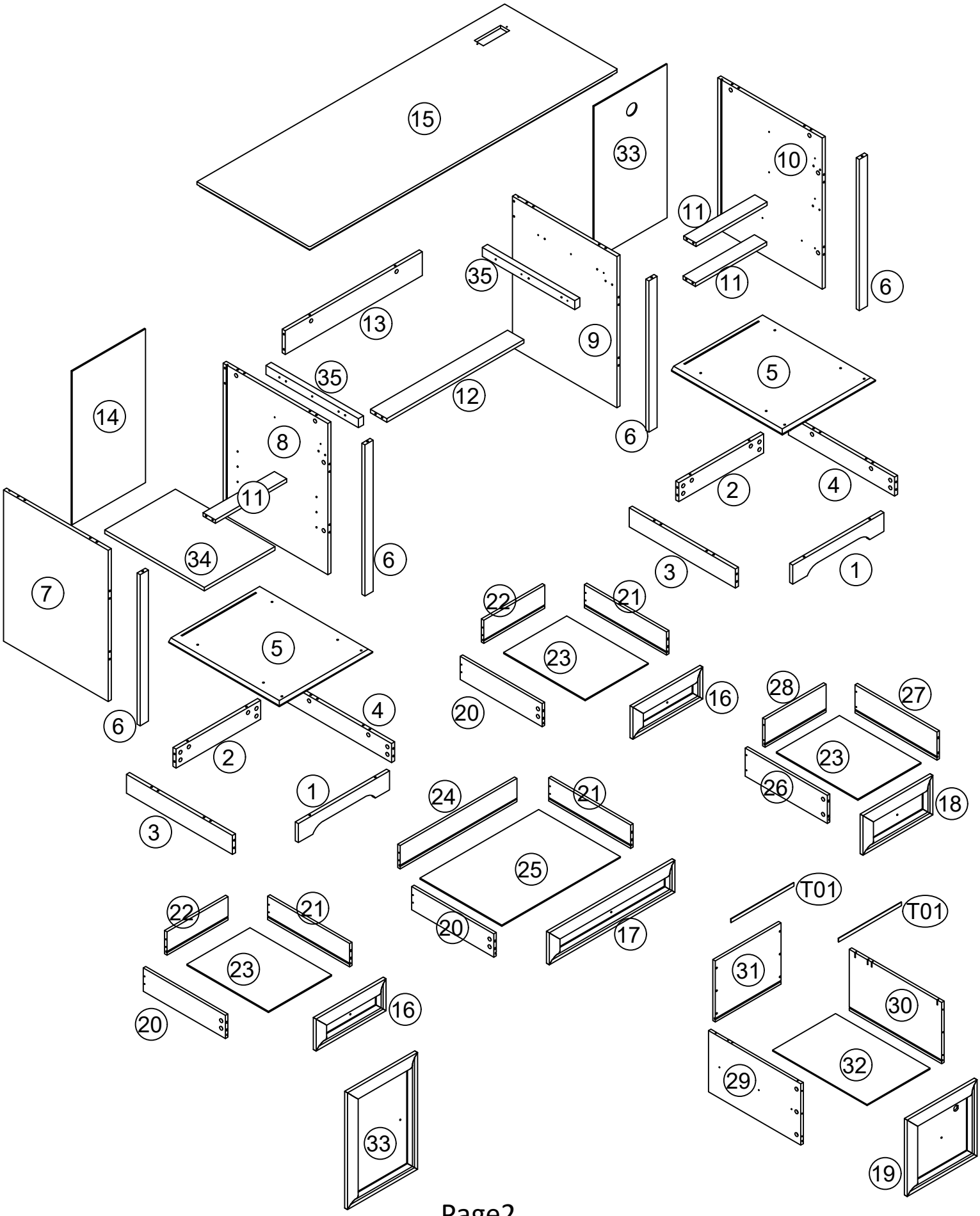

Hardware List

Please check if all the pieces listed below are received

A 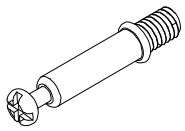 Cam Bolt Ø6*35mm Qty: 82+5	B 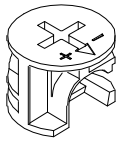 Cam Lock Ø15*9mm Qty: 82+5	C 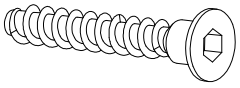 Screw D5*40mm Qty: 34+3	D 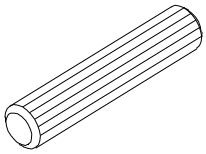 Wood Dowel Ø6*30mm Qty: 42+4	E 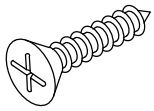 Screw D3.5*12mm Qty:62+5
F 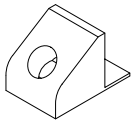 Plastic wedge Qty: 8+1	G 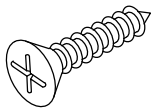 Screw D3*16mm Qty:8+1	H 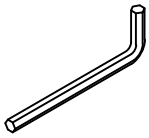 Hex screwdriver #3 Qty: 1	J 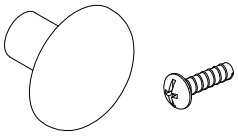 Handle Qty: 6	K  Screwdriver Qty: 1
L 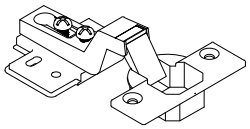 Cabinet hinge Qty: 2	M 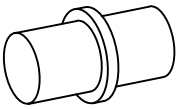 Shelf support Qty: 4	N 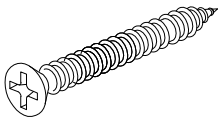 Shelf support D3.5*35mm Qty: 6	O 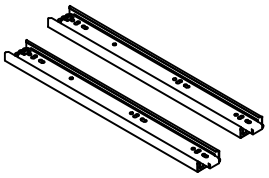 Slide rail Qty: 1	P 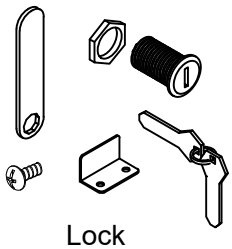 Lock Qty: 1
Q 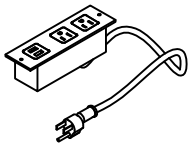 Power strip Qty: 1	DR 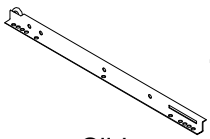 Drawer Slides Qty: 4	CR 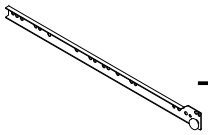	DL 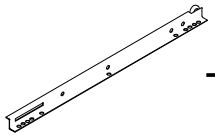	CL 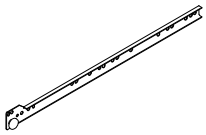 DR, CR, DL, and CL are all marked on the slide rail, and you can easily identify which is DR, CR, DL, and CL by these labels.

ASSEMBLY REQUIREMENTS

3-4 Hours Assembly Time (Approximate)

2 -Person Assembly

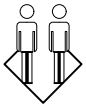

Tools Required (Not Provided):

Power Drill



How the knock down assembly system works

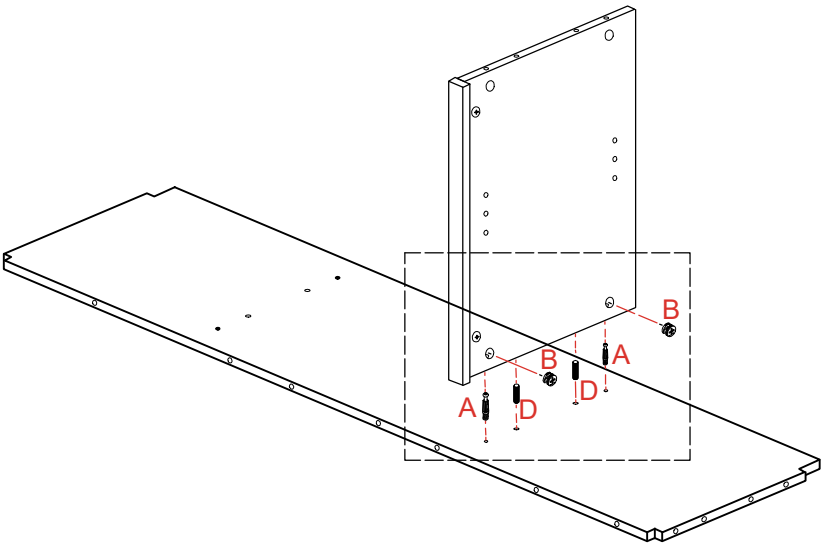

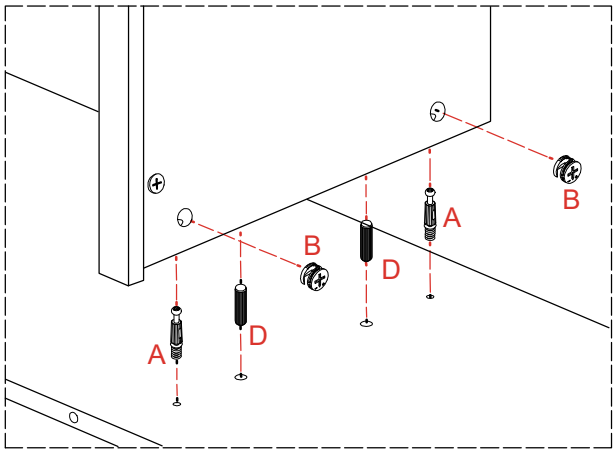

How to Install Wood Dowel

Insert the wood dowel (D) at least half wat by tapping lightly with a rubber mallet,IF NECESSARY.

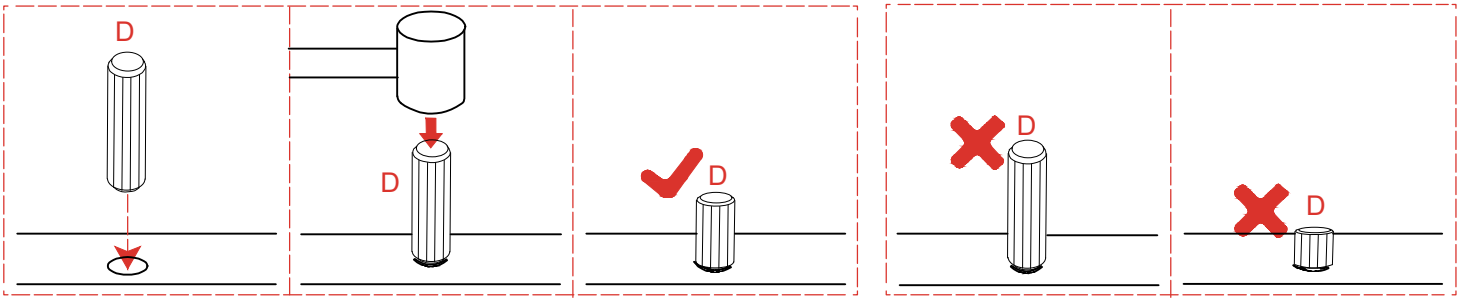

CAM LOCK SYSTEM OPERATION

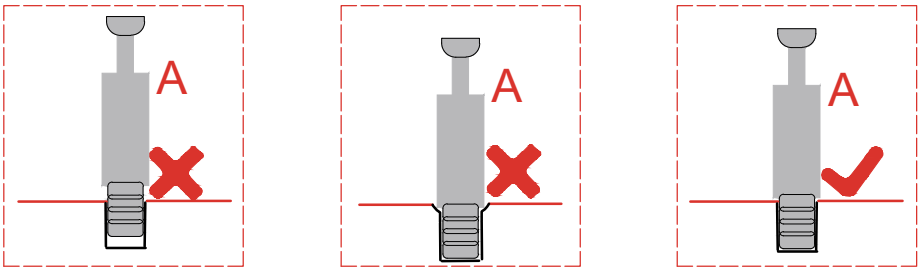

1.Screw the cam bolt (A) into the threaded insert on the panel.
2.Connect both panels together making sure cam bolt (A) goes into the pre-drilled large gole on the end of panel for cam lock (B).
3.Insert the cam lock (B) into the pro-drilled large hole on the panel. Make sure the cross slot of cam lock (B) faces out (The arrow should point towards Screw No. A) .
4.Rotate the cam lock (B) clockwise with a self-supplied phillips screwdriver to lock the cam bolt (A) in place (Rotate 100-180 degrees until tight) .

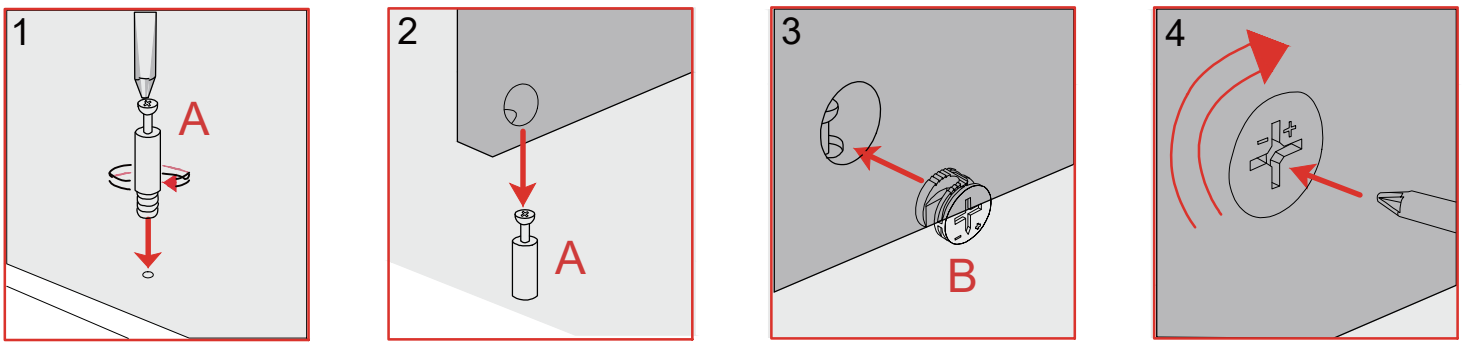

Step 1

l. As shown in the illustration, use a screwdriver to insert the cam bolt (A) into the corresponding holes on panels (6).

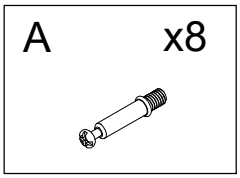

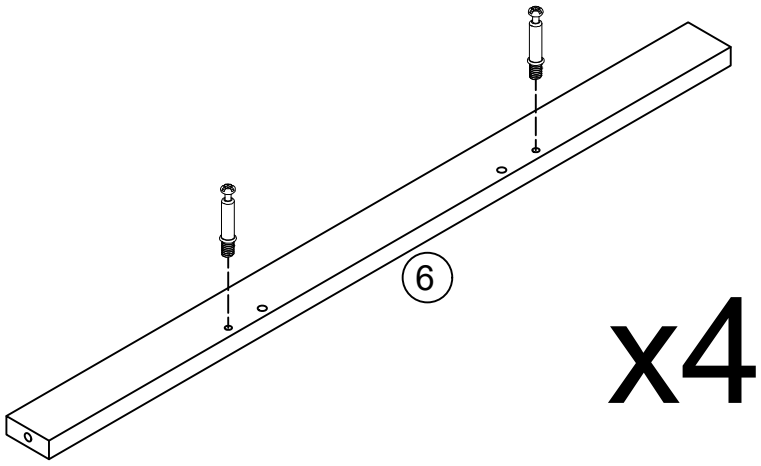

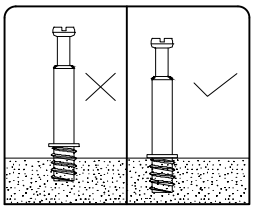

Step 2

l. Insert the wood dowel (D) into the panels (7 and 8).
ll. As shown in the illustration, connect the panels (6 and 6) to panels (7 and 8), insert the cam lock (B) into the corresponding holes on panels (7 and 8), and then use a screwdriver to turn the cam lock (B) clockwise to secure the cam bolt (A).

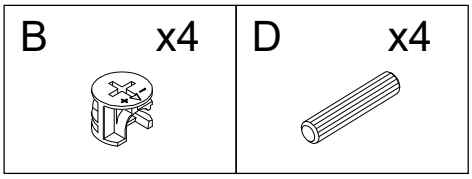

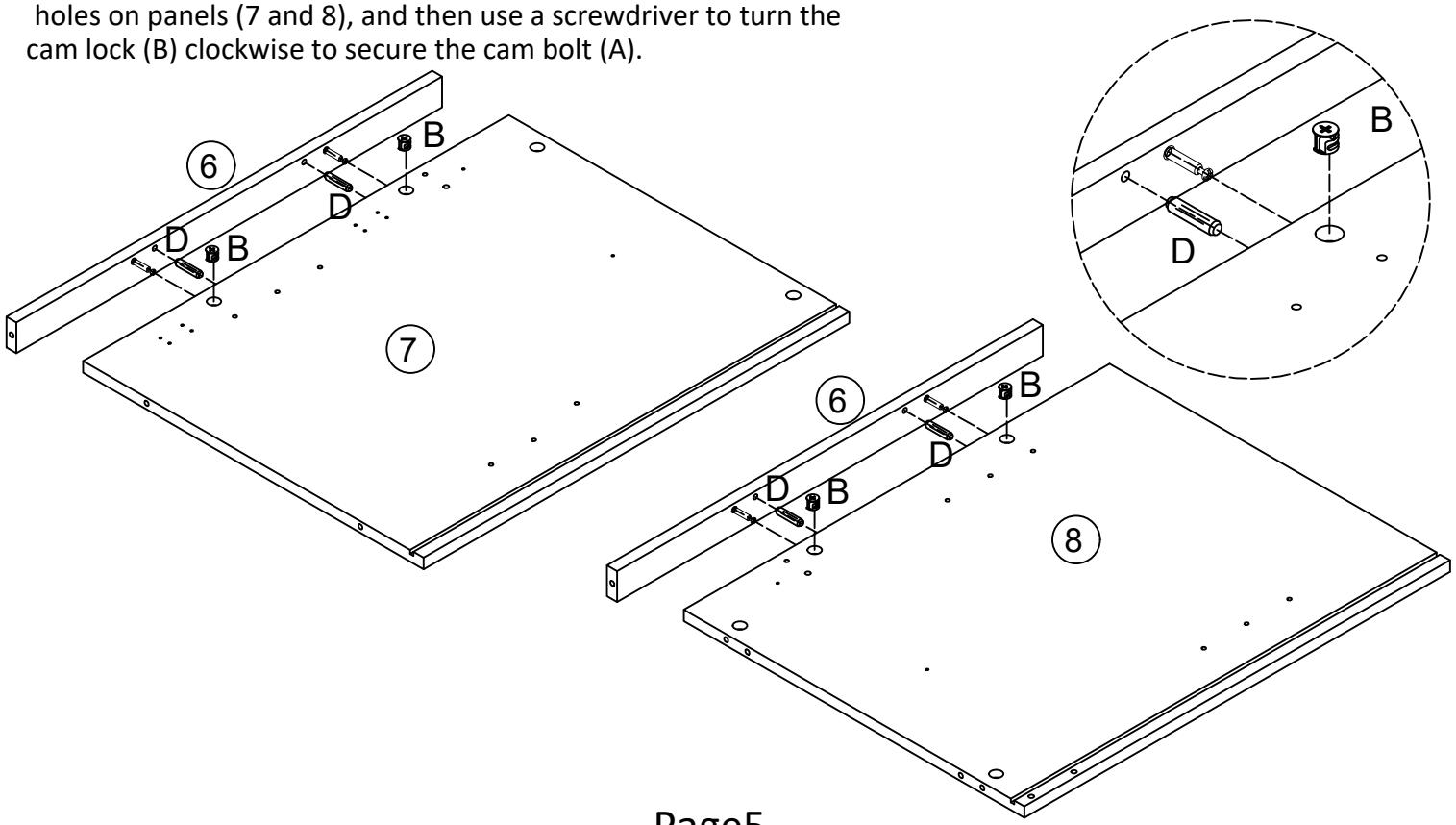

Step 3

l. Insert the wood dowel (D) into the panel (8).
ll. Use screws (N) to attach panel (35) to panel (8).

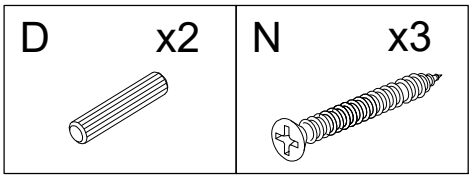

Note: As shown in the illustration, make sure the mounting holes of the sliding rail are facing upward.

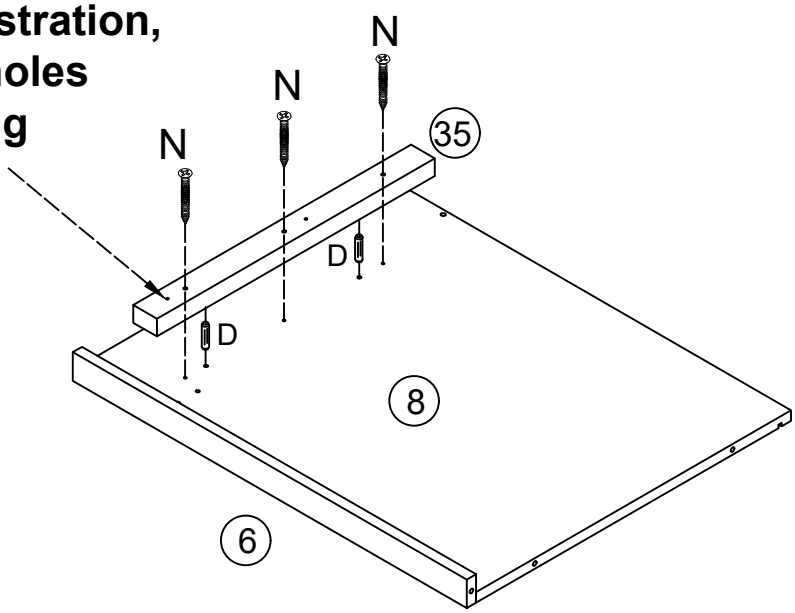

Step 4

l. Use screws (E) to attach the drawer slides (CL) to panel (35).
ll. Rotate panel (8) 180°. Use screws (E) to attach the drawer slides (CR) to panel (8).

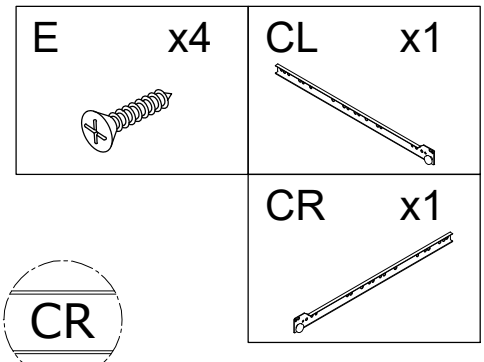

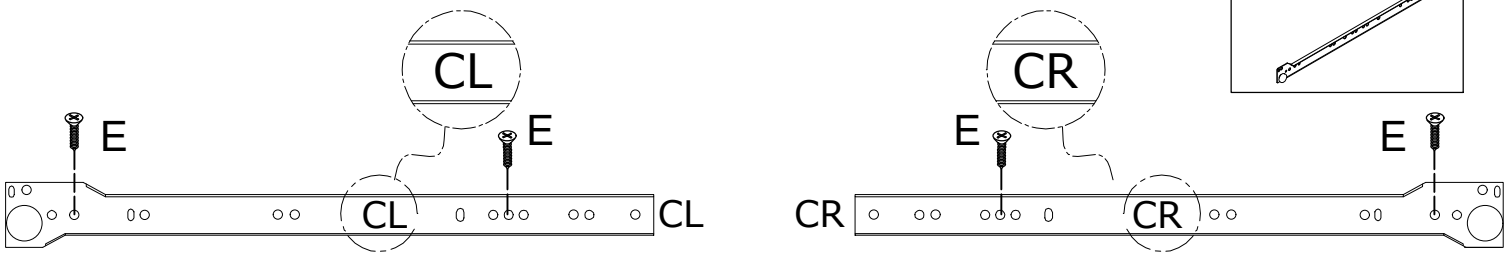

Note: CL CR is printed on the slide rail.
You can identify the slide rail as CL CR.

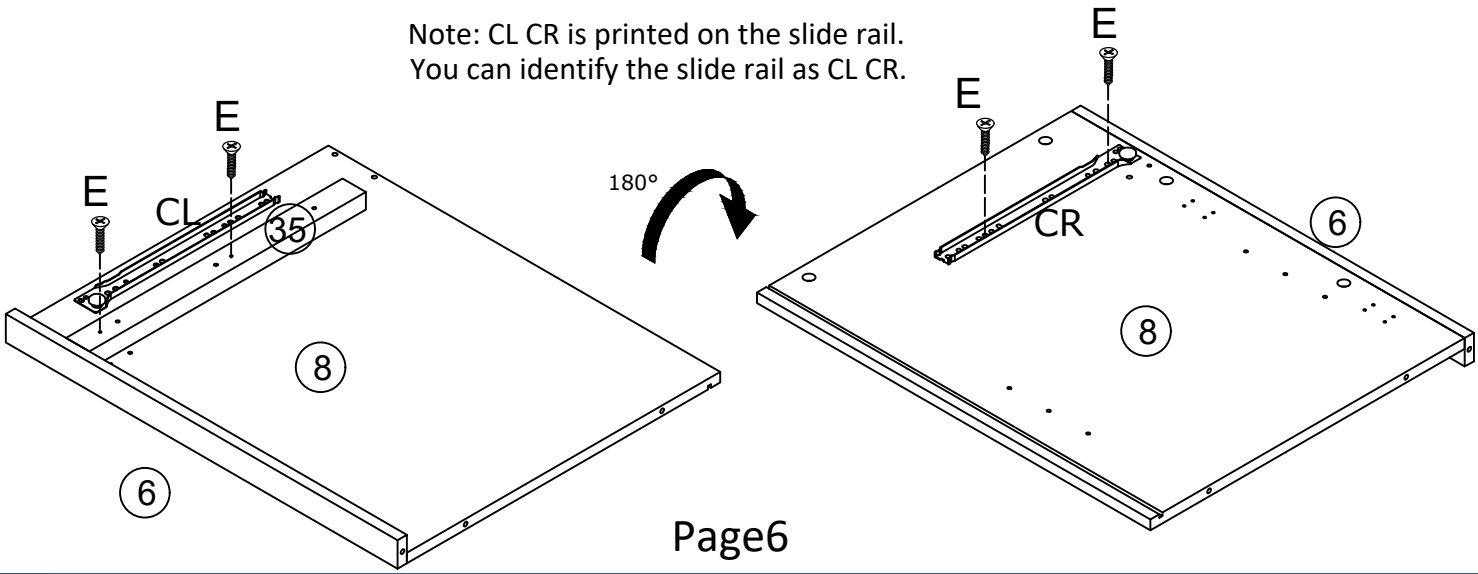

Step 5

l. Use screws (E) to attach the drawer slides (CL) to panels (7).

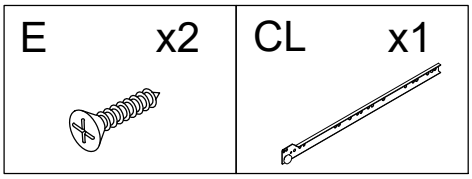

Note: CL is printed on the slide rail.
You can identify the slide rail as CL.

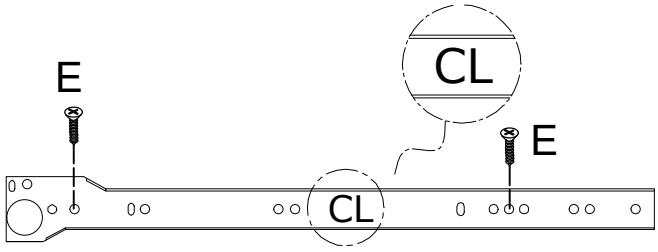

CL

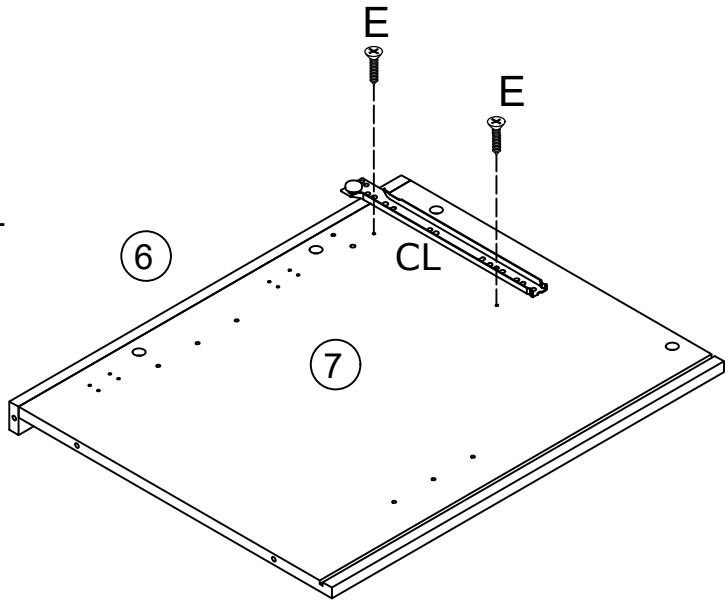

Step 6

l. As shown in the illustration, use a screwdriver to
insert the cam bolt (A) into the corresponding holes on panels (7).

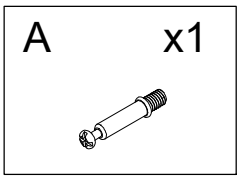

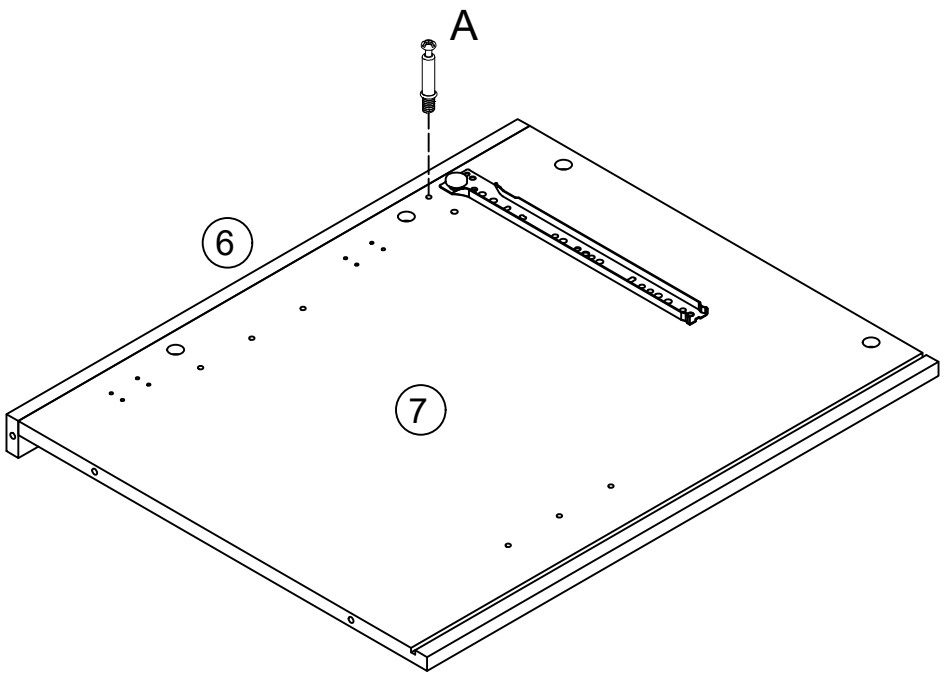

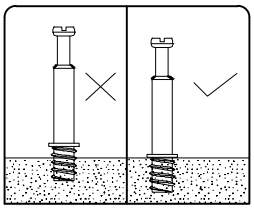

Step 7

A	x3



I. As shown in the illustration, use a screwdriver to insert the cam bolt (A) into the corresponding holes on panel (8).

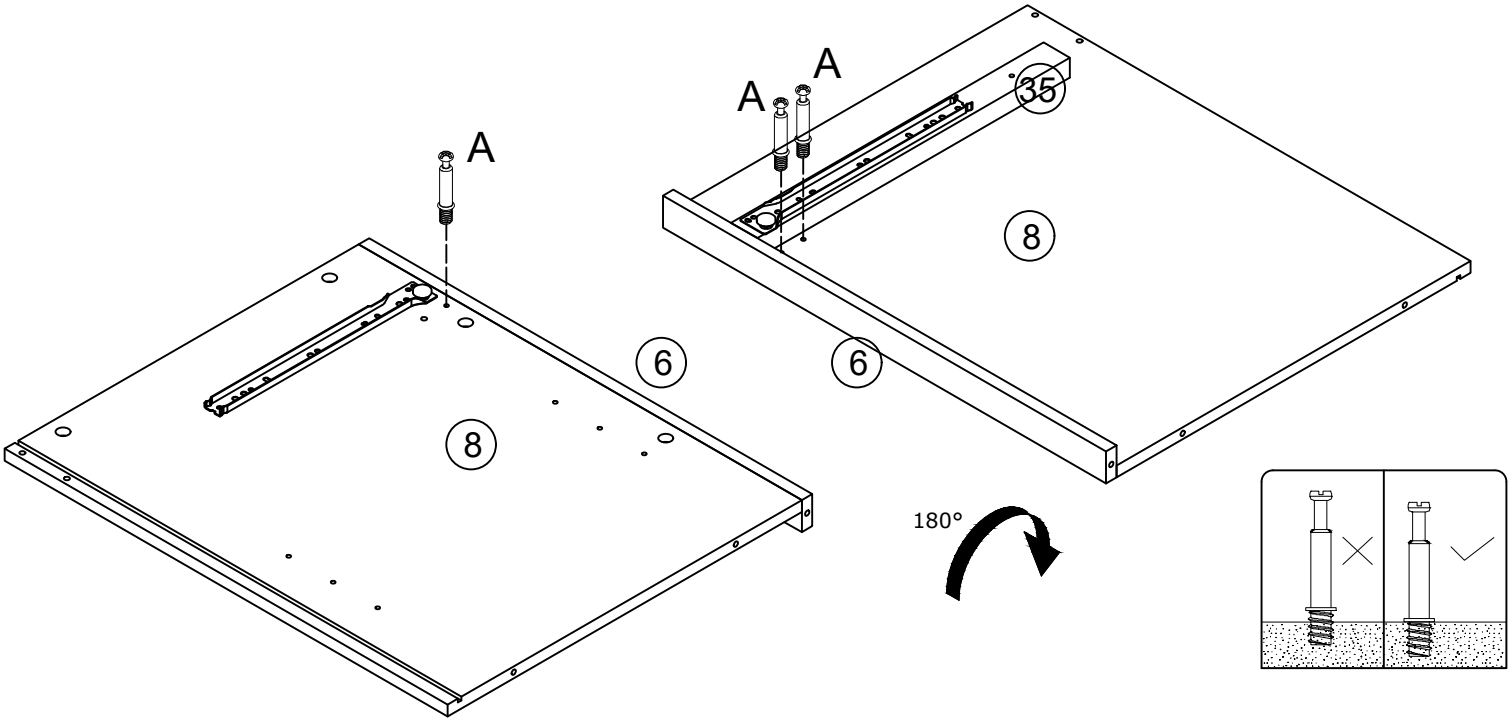

Step 8

B	x1	D	x1



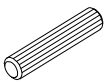

I. Insert the wood dowel (D) into the panel (8).
II. As shown in the illustration, connect the panel (11) to panel (8), insert the cam lock (B) into the corresponding holes on panel (11), and then use a screwdriver to turn the cam lock (B) clockwise to secure the cam bolt (A).

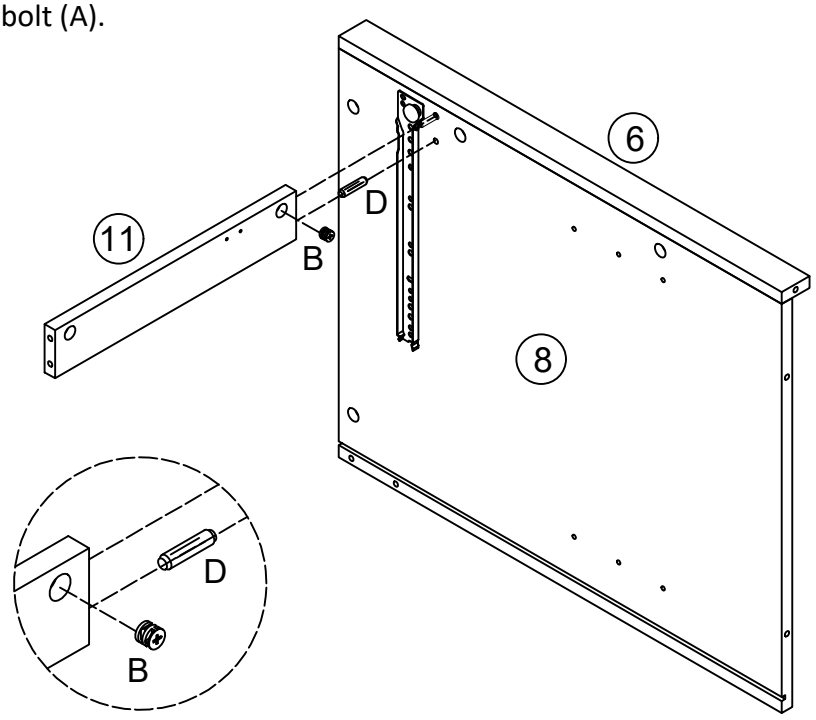

Step 9

B x1	D x1
	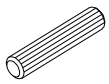

l. Insert the wood dowel (D) into the panel (7).
ll. As shown in the illustration, connect the panel (7) to panel (11), insert the cam lock (B) into the corresponding holes on panel (11), and then use a screwdriver to turn the cam lock (B) clockwise to secure the cam bolt (A).

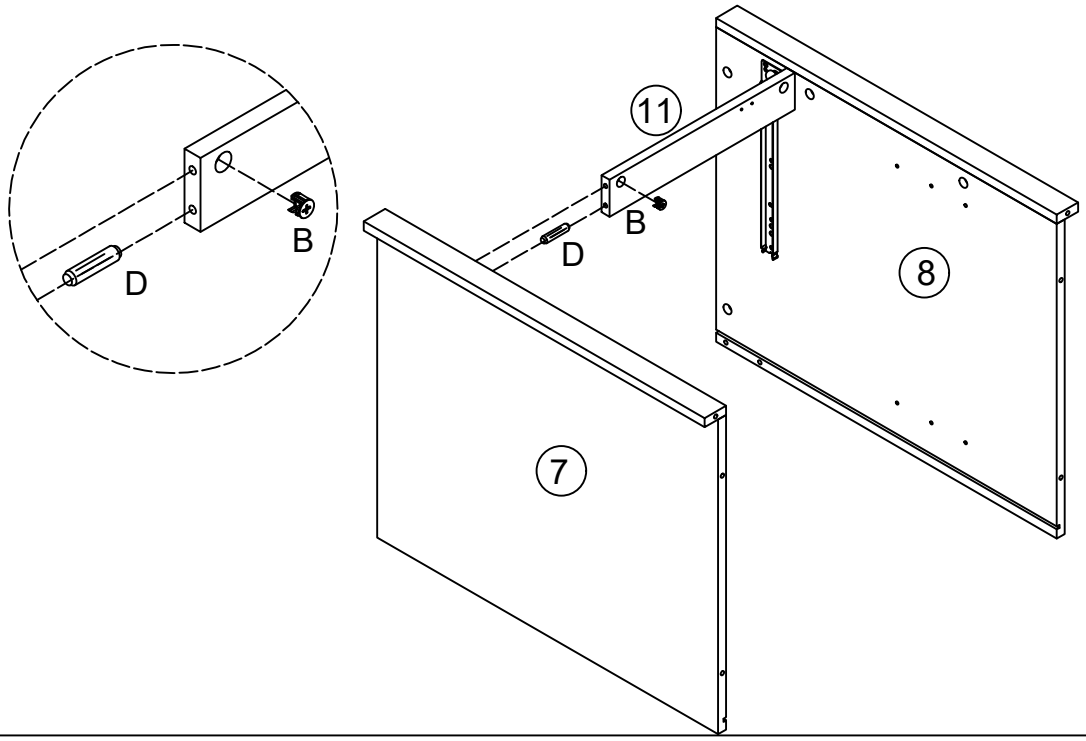

Step 10

C x4	H x1
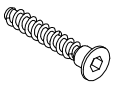	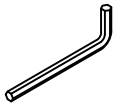
	D x2
	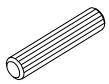

l. Insert the wood dowel (D) into the panels (6 and 6).
ll. Use screws (C) to attach panel (5) to panels (7 and 8).

Step 11

A x16

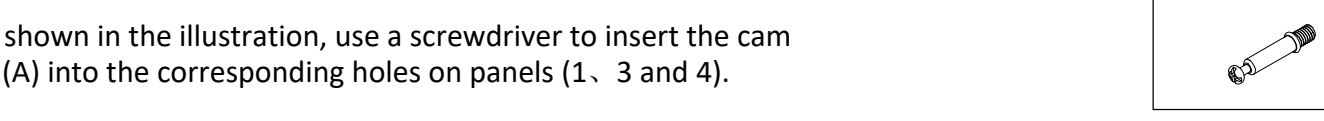

l. As shown in the illustration, use a screwdriver to insert the cam bolt (A) into the corresponding holes on panels (1、3 and 4).

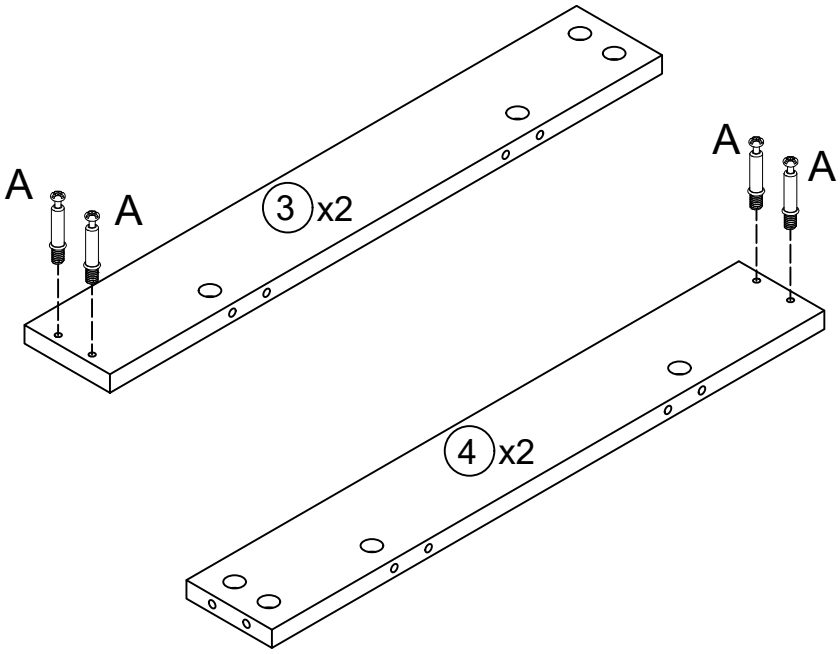

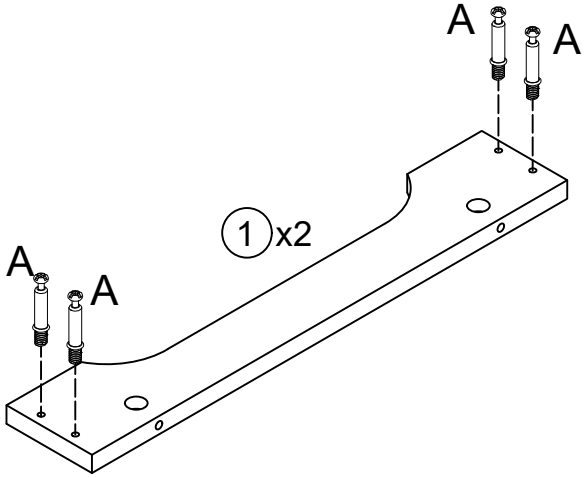

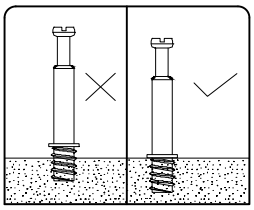

Step 12

B x8



l. As shown in the illustration, connect the panels (3 and 4) to panel (2), insert the cam lock (B) into the corresponding holes on panel (2), and then use a screwdriver to turn the cam lock (B) clockwise to secure the cam bolt (A).

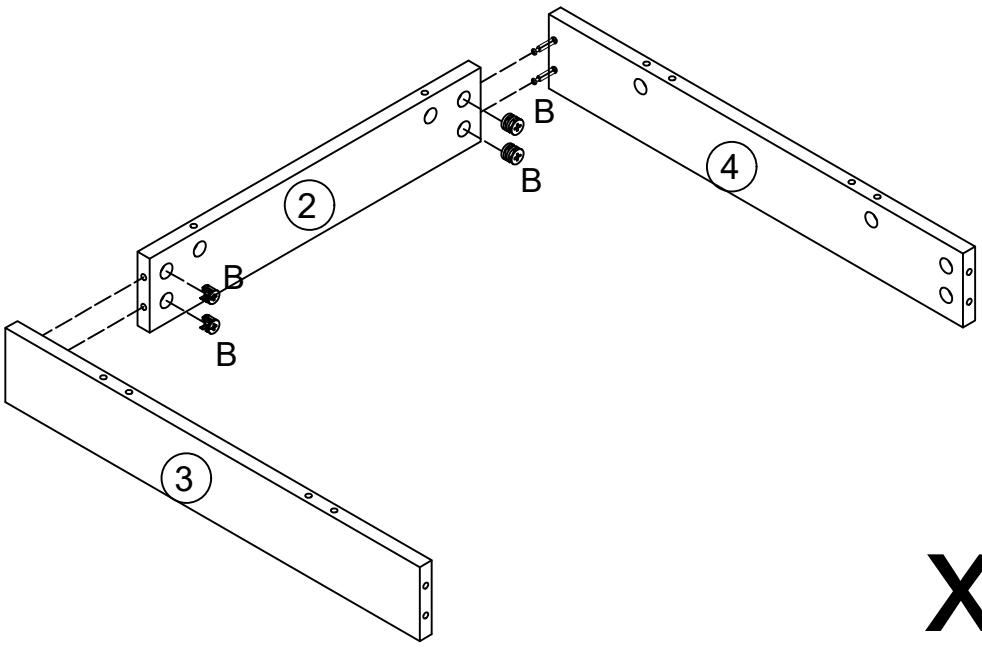

x2

Step 13

B x8



l. As shown in the illustration, connect the panel (1) to panels (3 and 4), insert the cam lock (B) into the corresponding holes on panels (3 and 4), and then use a screwdriver to turn the cam lock (B) clockwise to secure the cam bolt (A).

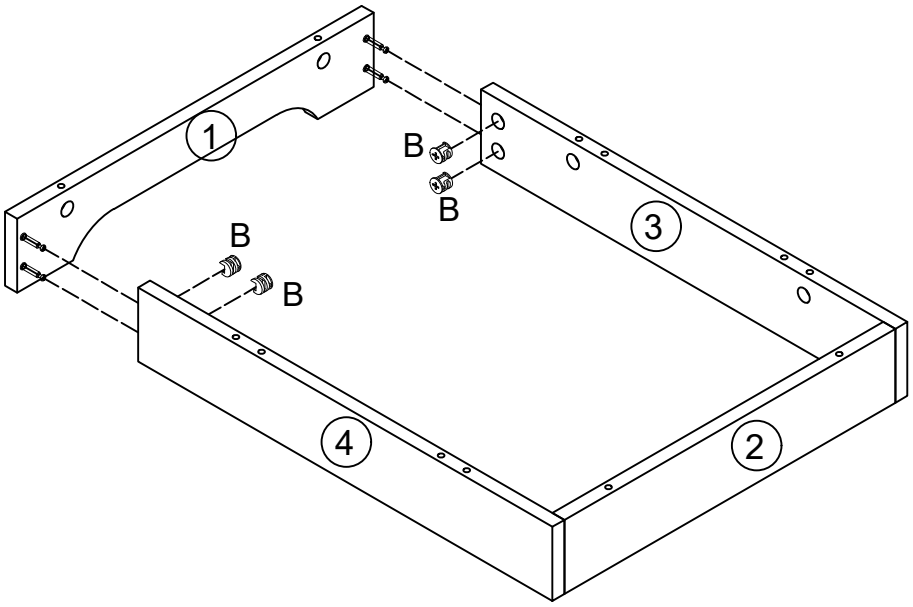

x2

Step 14

A x8



l. As shown in the illustration, use a screwdriver to insert the cam bolt (A) into the corresponding holes on panel (5).

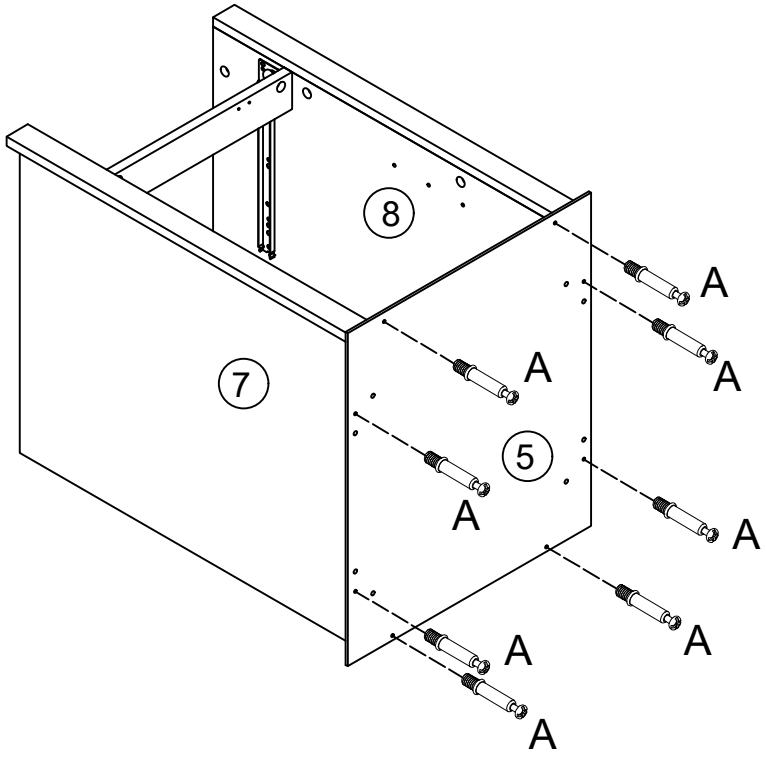

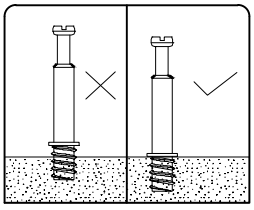

Step 15

B x8	D x4
	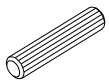

l. Insert the wood dowel (D) into the panel (5).
ll. As shown in the illustration, connect the assembled panels (1、2、3 and 4) to panel (5), insert the cam lock (B) into the corresponding holes on panels (1、2、3 and 4), and then use a screwdriver to turn the cam lock (B) clockwise to secure the cam bolt (A).

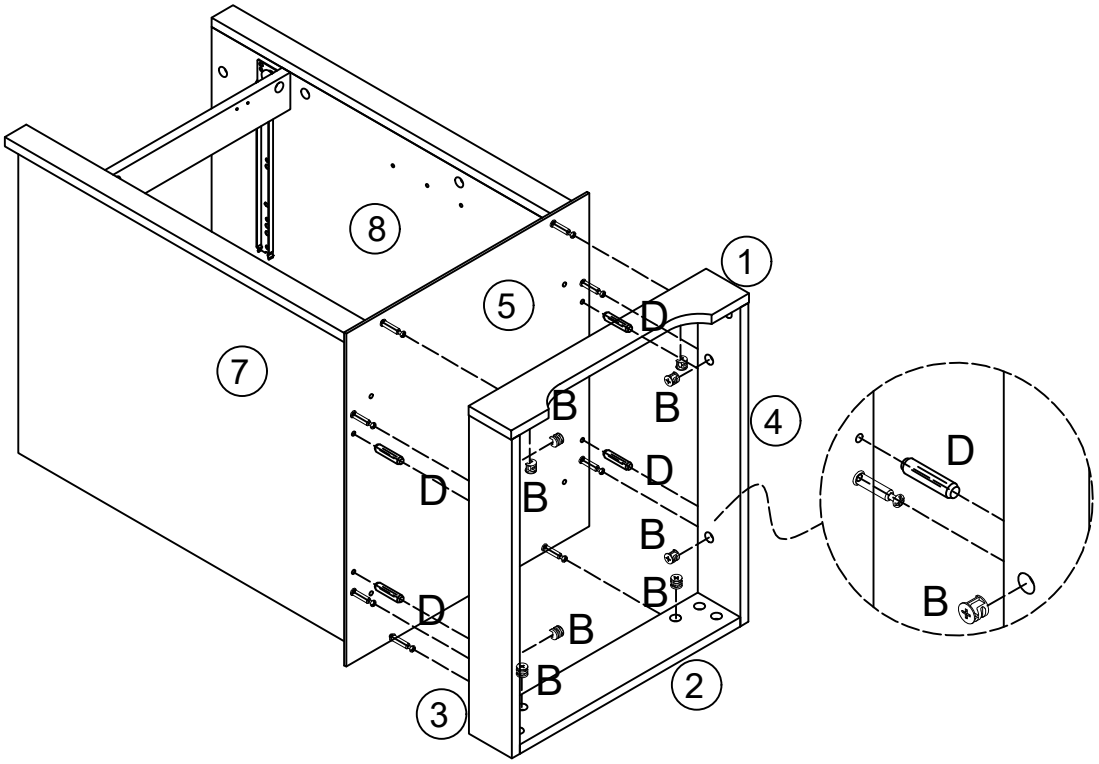

Step 16

B x4	D x4
	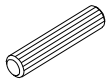

l. Insert the wood dowel (D) into the panels (9 and 10).
ll. As shown in the illustration, connect the panels (6 and 6) to panels (9 and 10), insert the cam lock (B) into the corresponding holes on panels (9 and 10)), and then use a screwdriver to turn the cam lock (B) clockwise to secure the cam bolt (A).

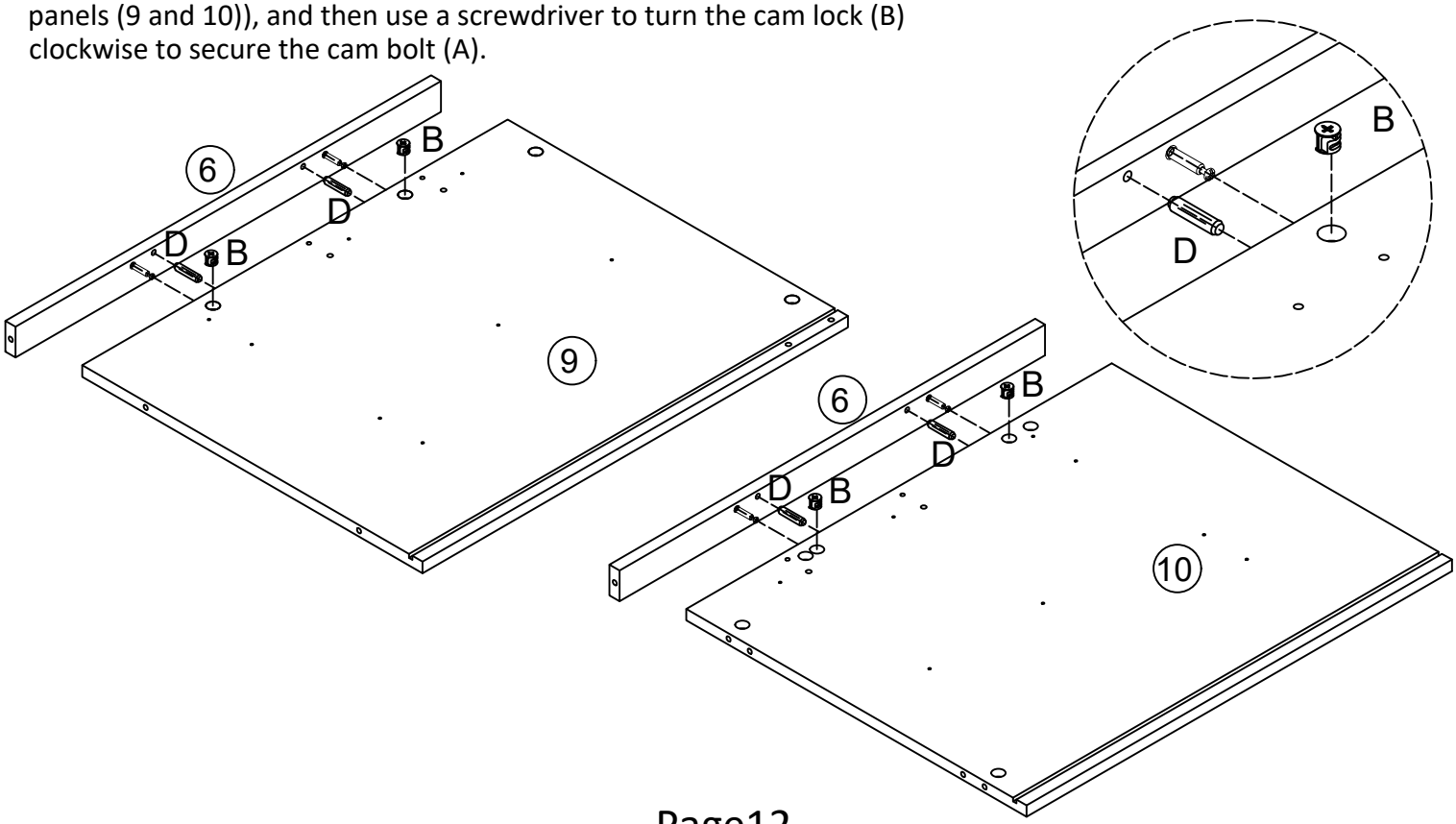

Step 17

I. Insert the wood dowel (D) into the panel (9).
II. Use screws (N) to attach panel (35) to panel (9).

D x2	N x3

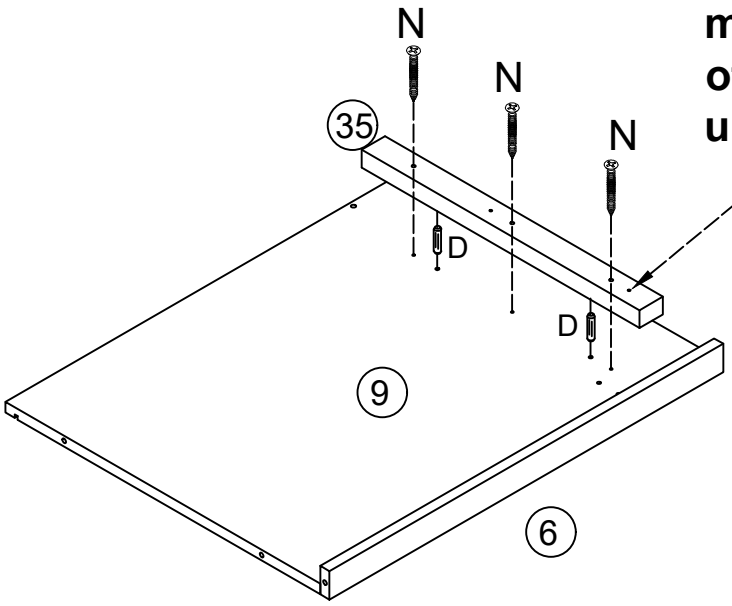

Note: As shown in the illustration, make sure the mounting holes of the sliding rail are facing upward.

Step 18

I. Use screws (E) to attach the drawer slides (CL) to panel (9).
II. Rotate panel (9) 180°. Use screws (E) to attach the drawer slides (CR) to panel (35).

E x6	CL x2
	CR x1

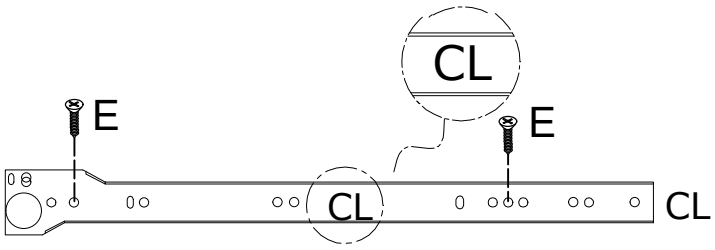

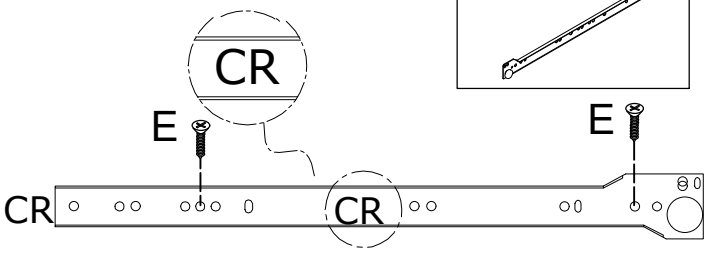

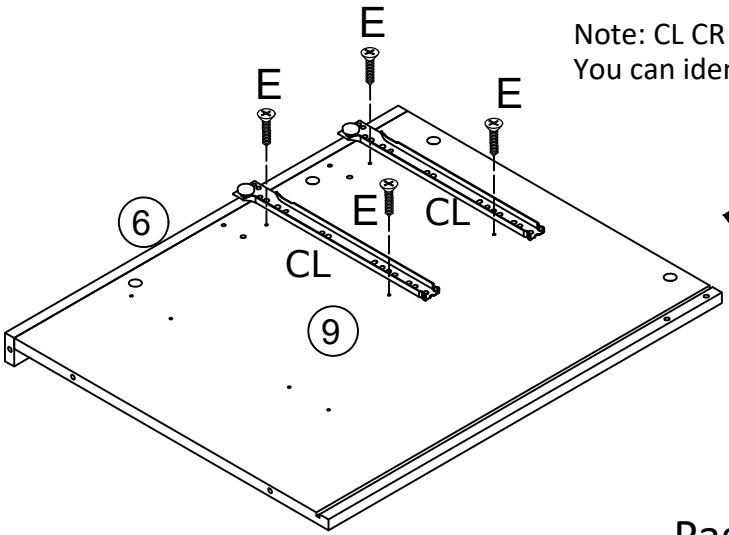

Note: CL CR is printed on the slide rail.
You can identify the slide rail as CL CR.

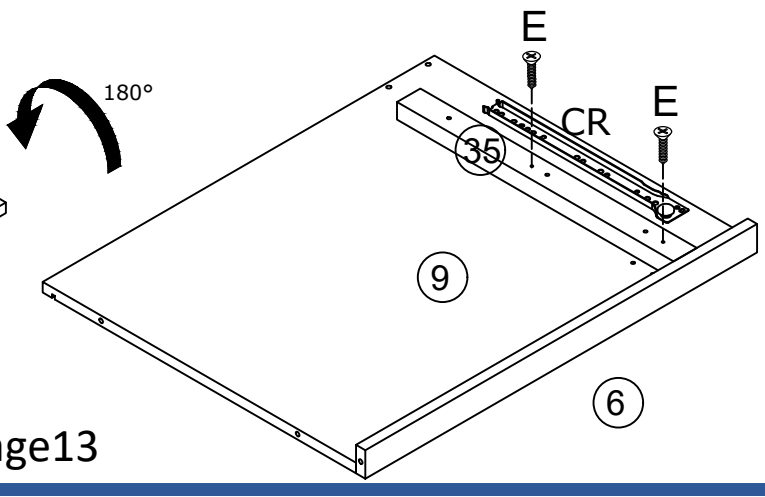

Step 19

Hardware installation demonstration

- Before installing the drawer rails,you need to split rail No.O into outer rail No.O1 and inner rail No.O2

1.Place the rail No.O as shown in picture, Then Pull out the O2

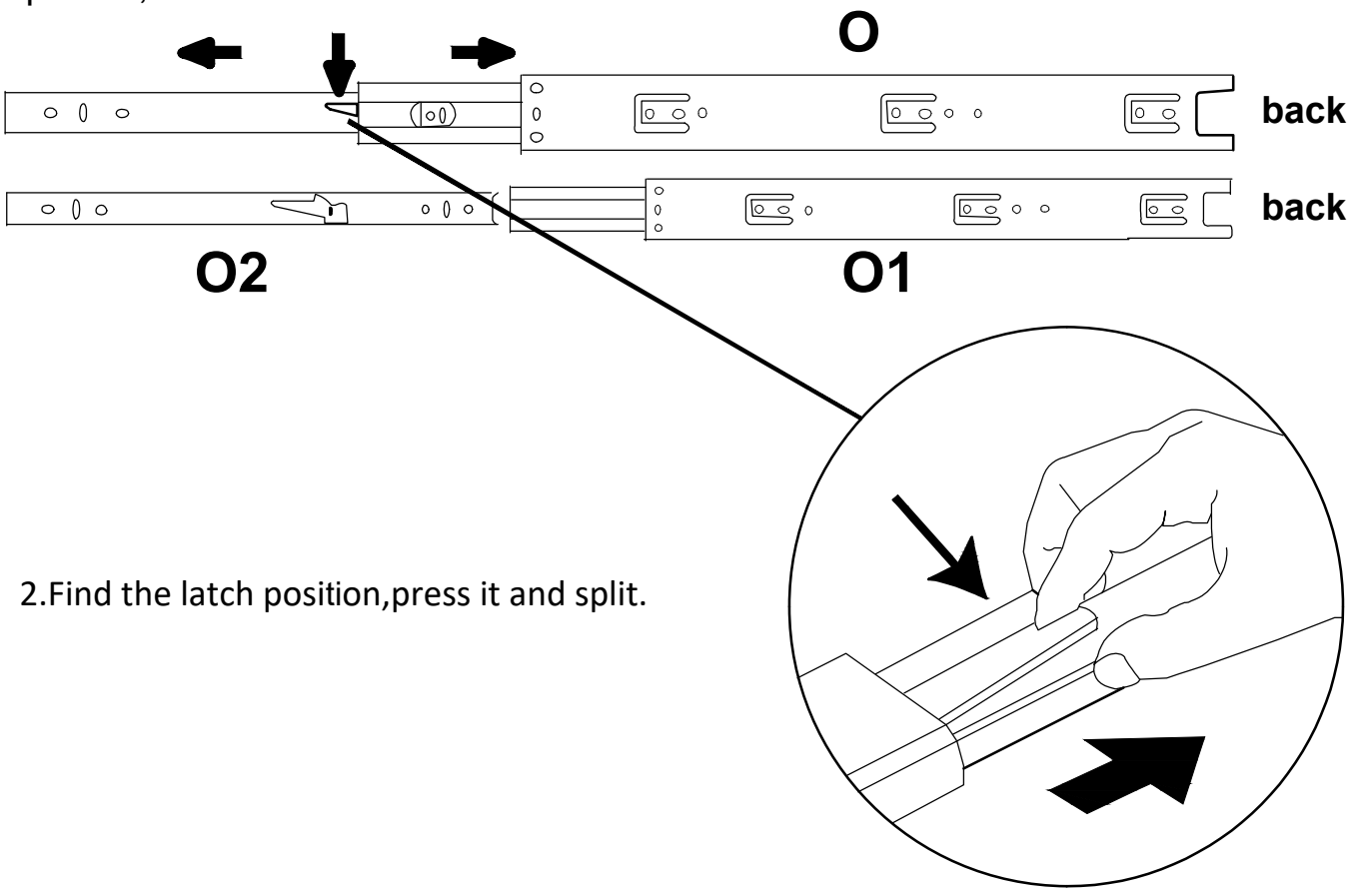

2.Find the latch position,press it and split.

Warm Reminder:Press it and split

Step 20

E x4	O 1 x1

l. Use screws (E) to attach the slide rail (O1) to panel (9).

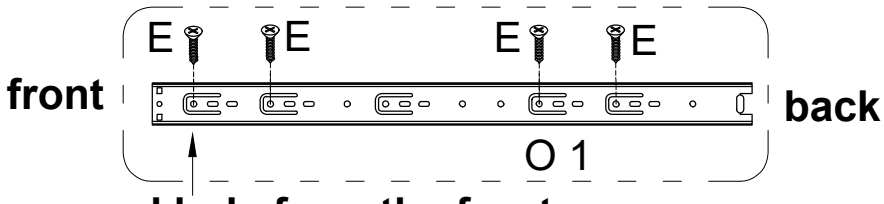

The second hole from the front.

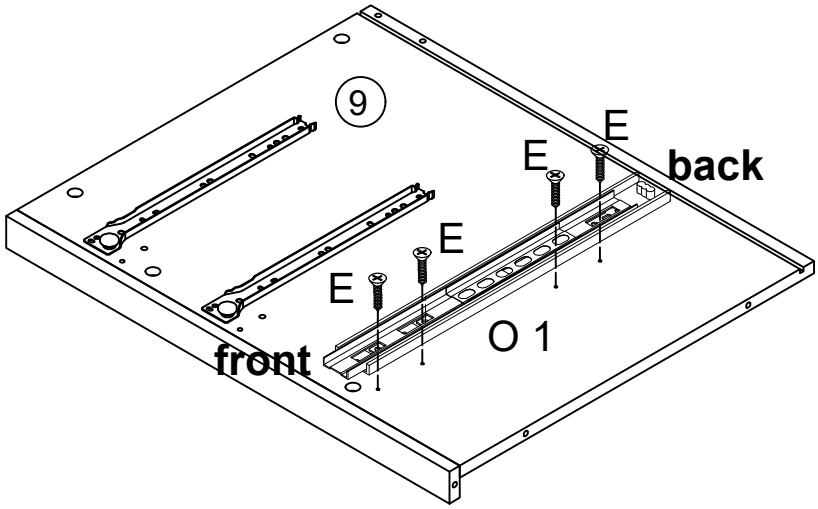

Step 21

E x4	CR x2

l. Use screws (E) to attach the drawer slides (CR) to panel (10).

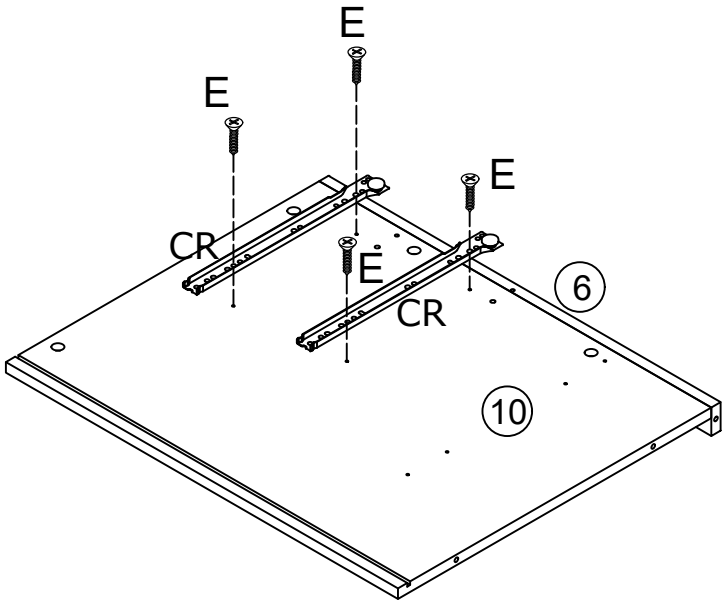

Note: CR is printed on the slide rail.
You can identify the slide rail as CR.

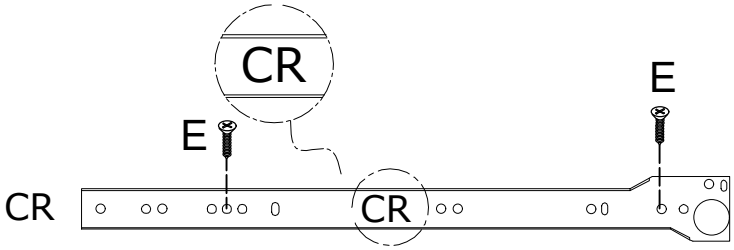

Step 22

l. Use screws (E) to attach the slide rail (O1) to panel (10).

E x4	O 1 x1

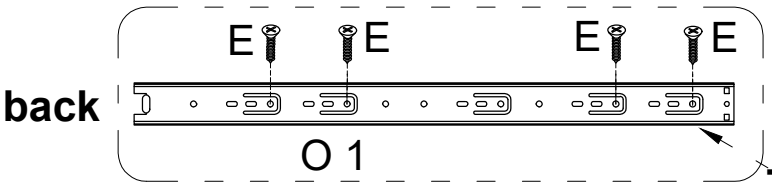

The second hole from the front.

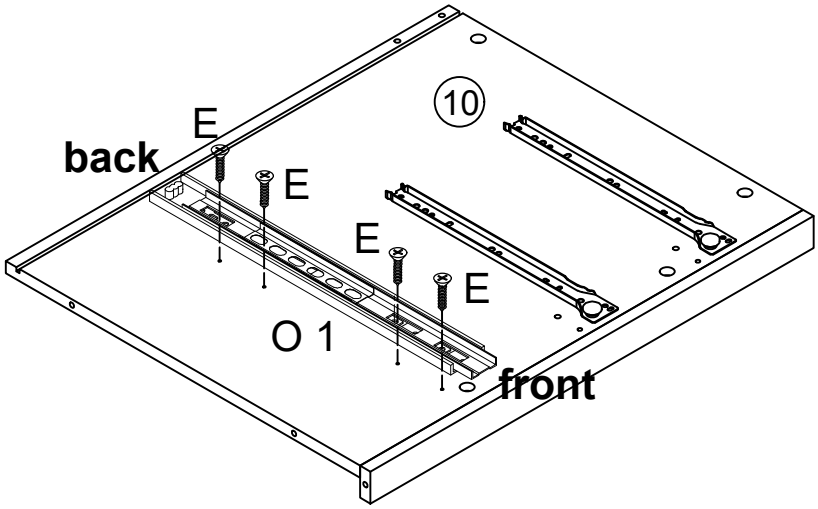

Step 23

l. As shown in the illustration, use a screwdriver to insert the cam bolt (A) into the corresponding holes on panel (10).

A x2

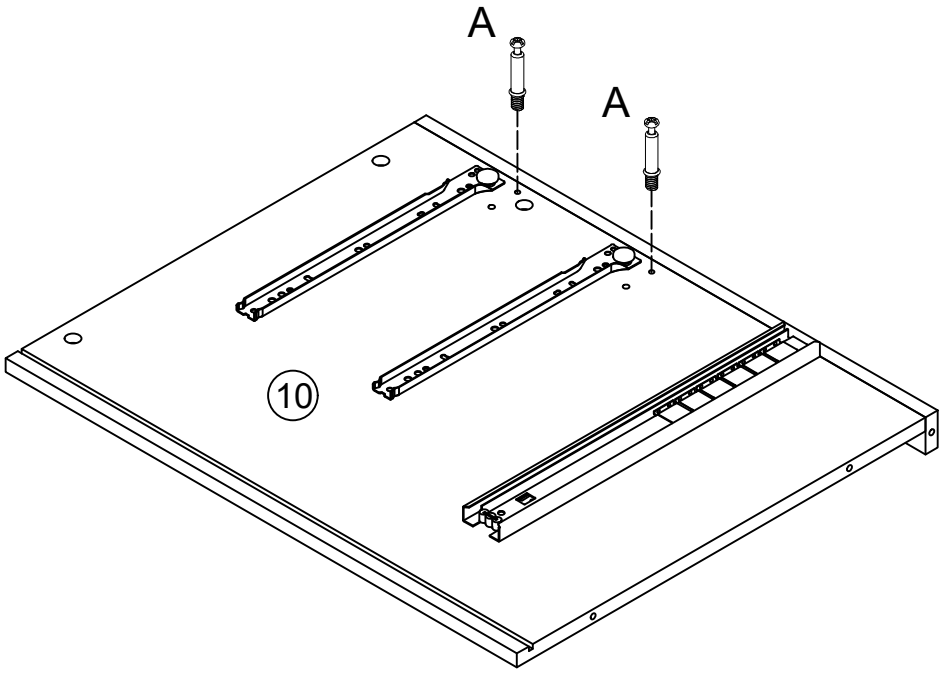

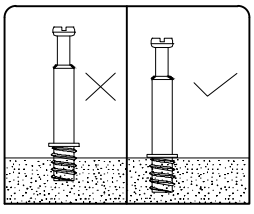

Step 24

l. As shown in the illustration, use a screwdriver to insert the cam bolt (A) into the corresponding holes on panel (9).

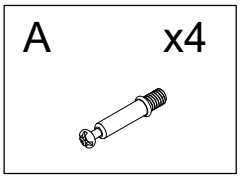

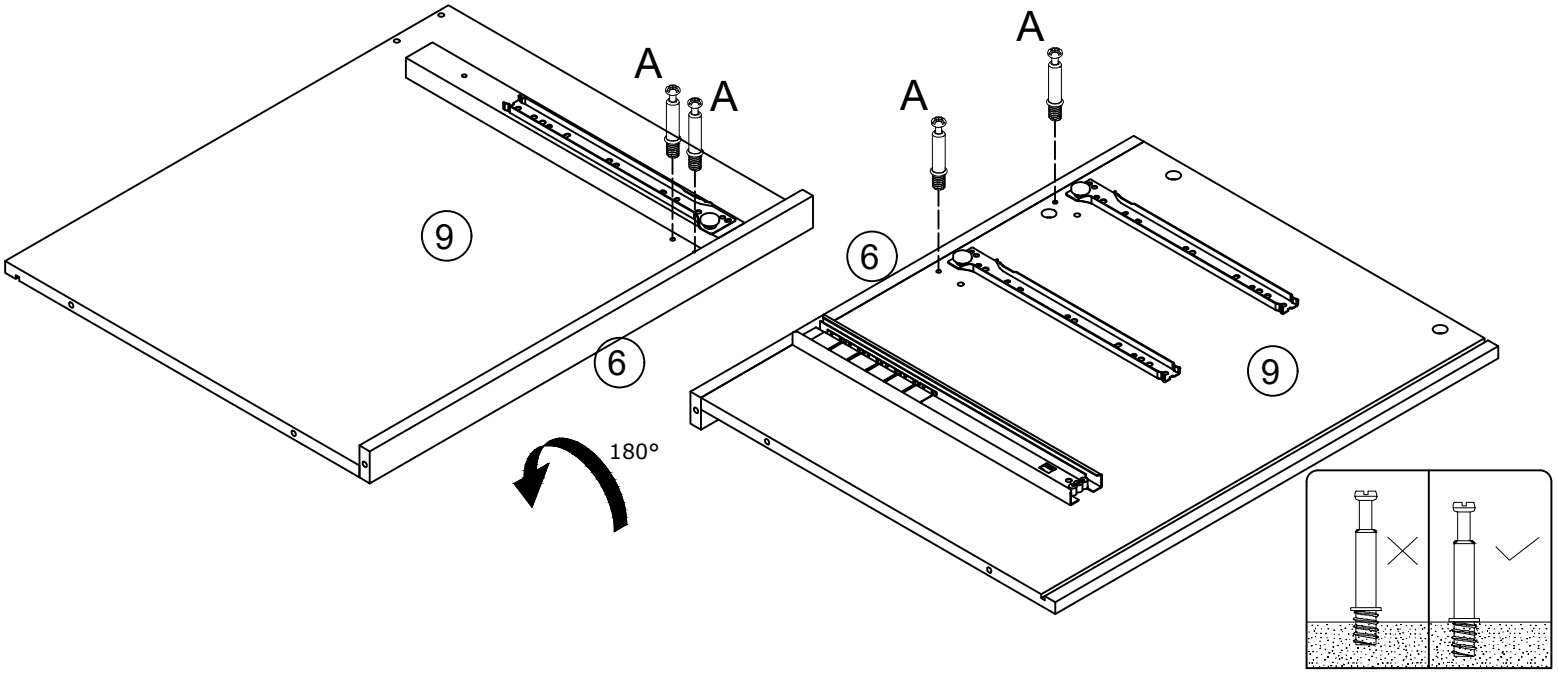

Step 25

l. Insert the wood dowel (D) into the panel (10).
ll. As shown in the illustration, connect the panels (11 and 11) to panel (10), insert the cam lock (B) into the corresponding holes on panels (11 and 11), and then use a screwdriver to turn the cam lock (B) clockwise to secure the cam bolt (A).

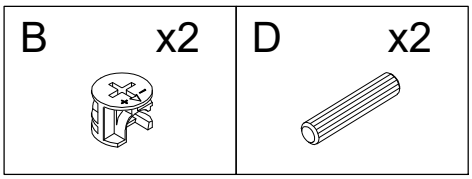

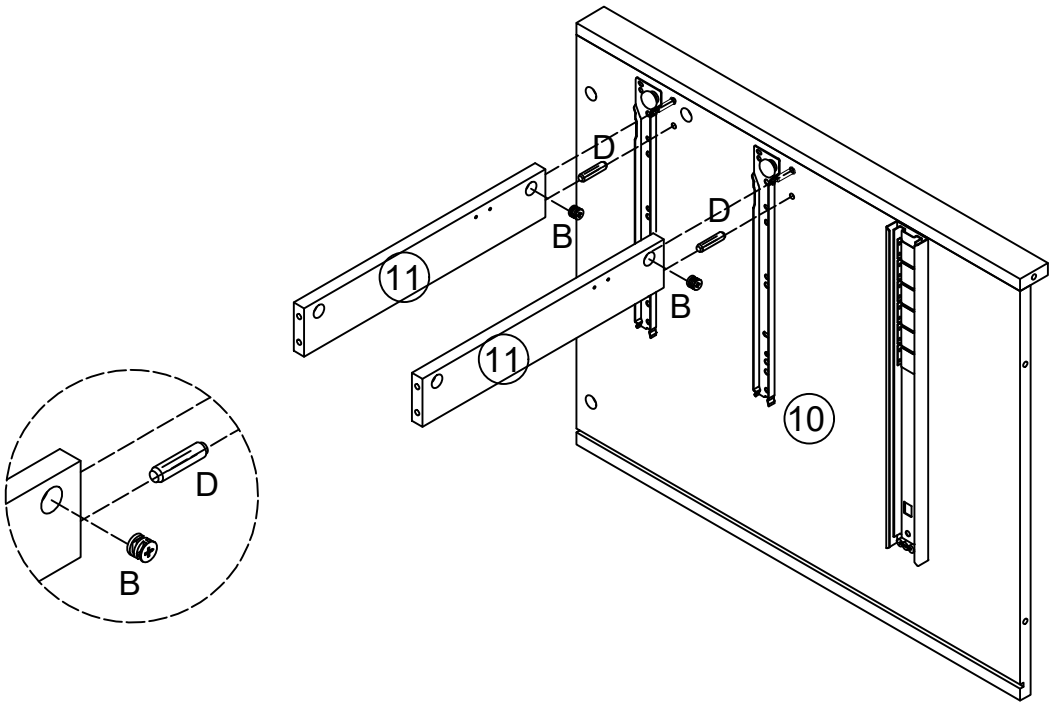

Step 26

B x2	D x2
	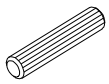

l. Insert the wood dowel (D) into the panel (9).
ll. As shown in the illustration, connect the panels (11 and 11) to panel (9), insert the cam lock (B) into the corresponding holes on panels (11 and 11), and then use a screwdriver to turn the cam lock (B) clockwise to secure the cam bolt (A).

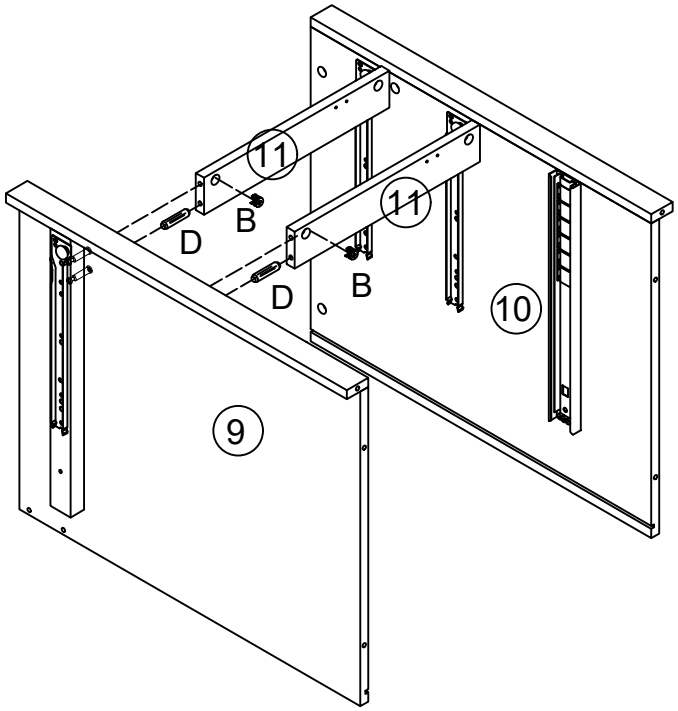

Step 27

C x4	H x1
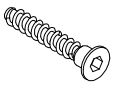	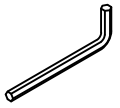
	D x2
	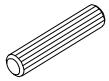

l. Insert the wood dowel (D) into the panels (6 and 6).
ll. Use screws (C) to attach panel (5) to panels (9 and 10).

Step 28

l. As shown in the illustration, use a screwdriver to insert the cam bolt (A) into the corresponding holes on panel (5).

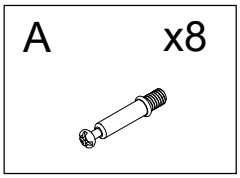

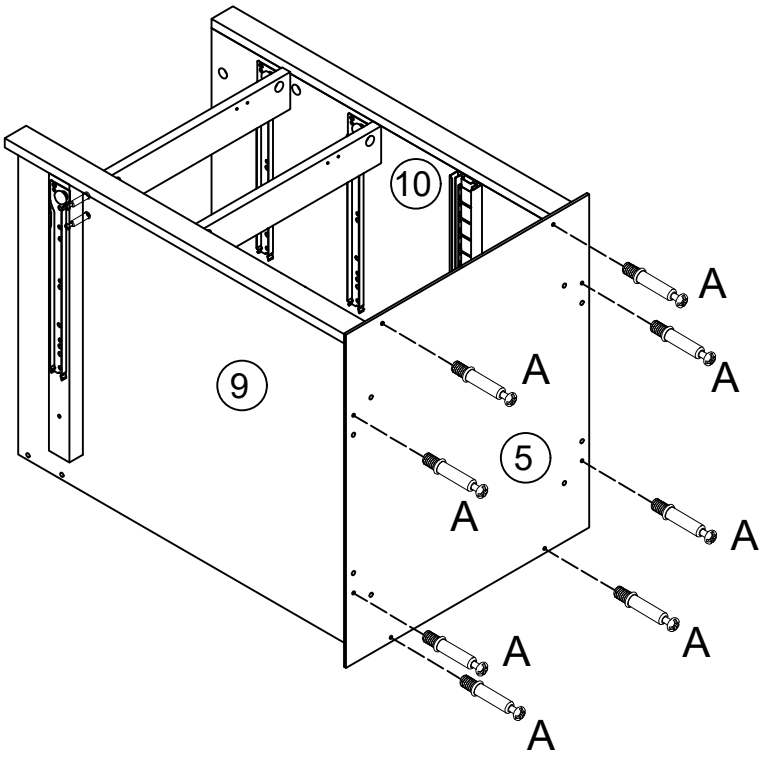

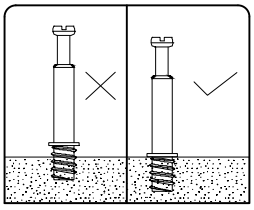

Step 29

l. Insert the wood dowel (D) into the panel (5).
ll. As shown in the illustration, connect the assembled panels (1、2、3 and 4) to panel (5), insert the cam lock (B) into the corresponding holes on panels (1、2、3 and 4), and then use a screwdriver to turn the cam lock (B) clockwise to secure the cam bolt (A).

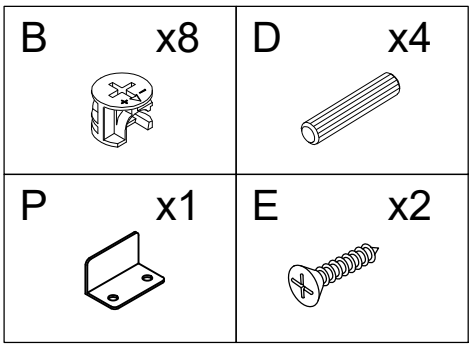

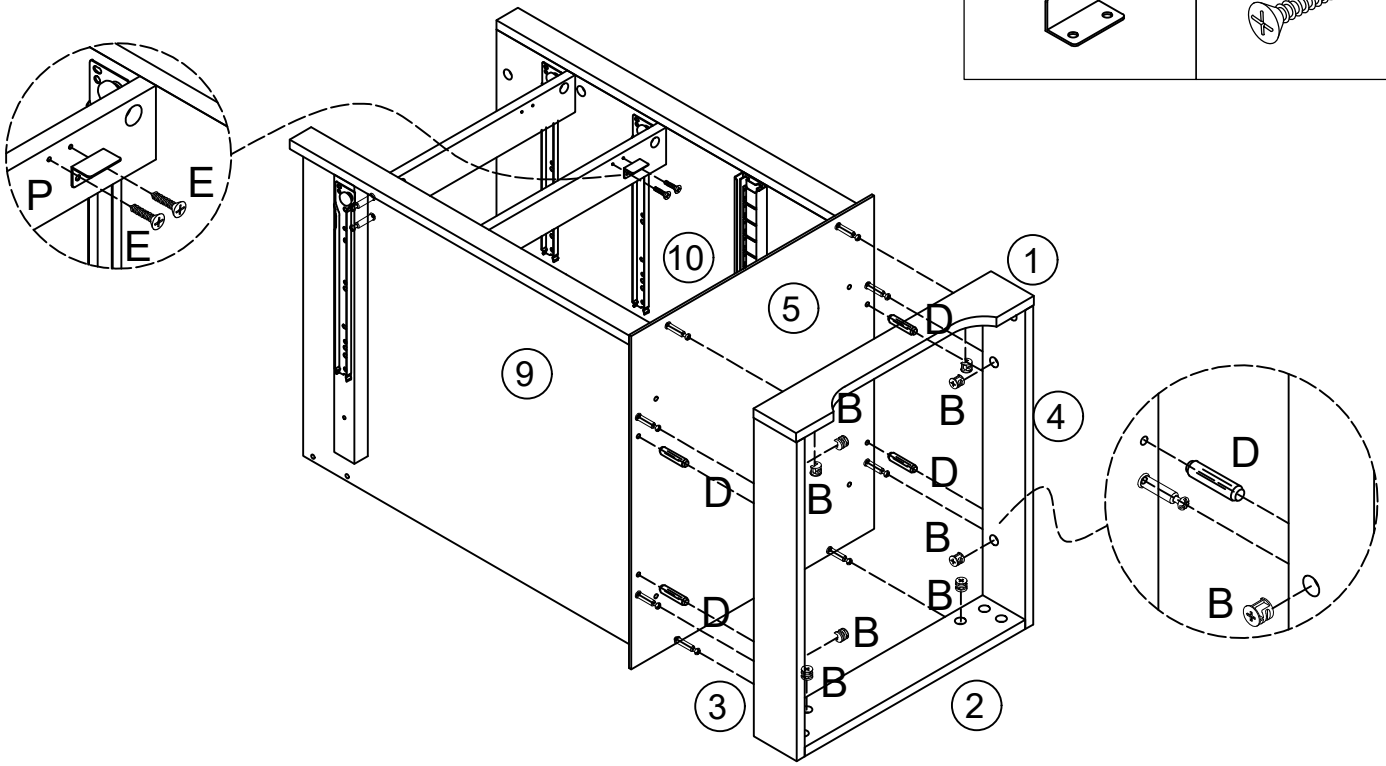

Step 30

l. As shown in the illustration, connect the panel (12) to panel (8), insert the cam lock (B) into the corresponding holes on panel (12), and then use a screwdriver to turn the cam lock (B) clockwise to secure the cam bolt (A).
ll. Use screws (C) to attach panel (13) to panel (8).

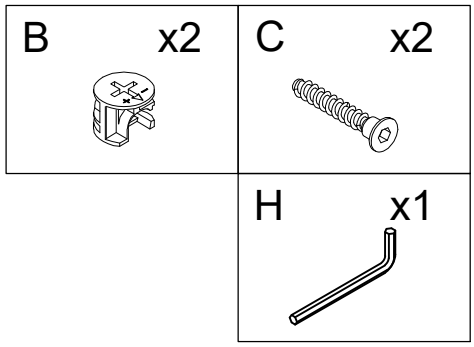

Note: As shown in the illustration, the holes on panel (13) should be facing upward.

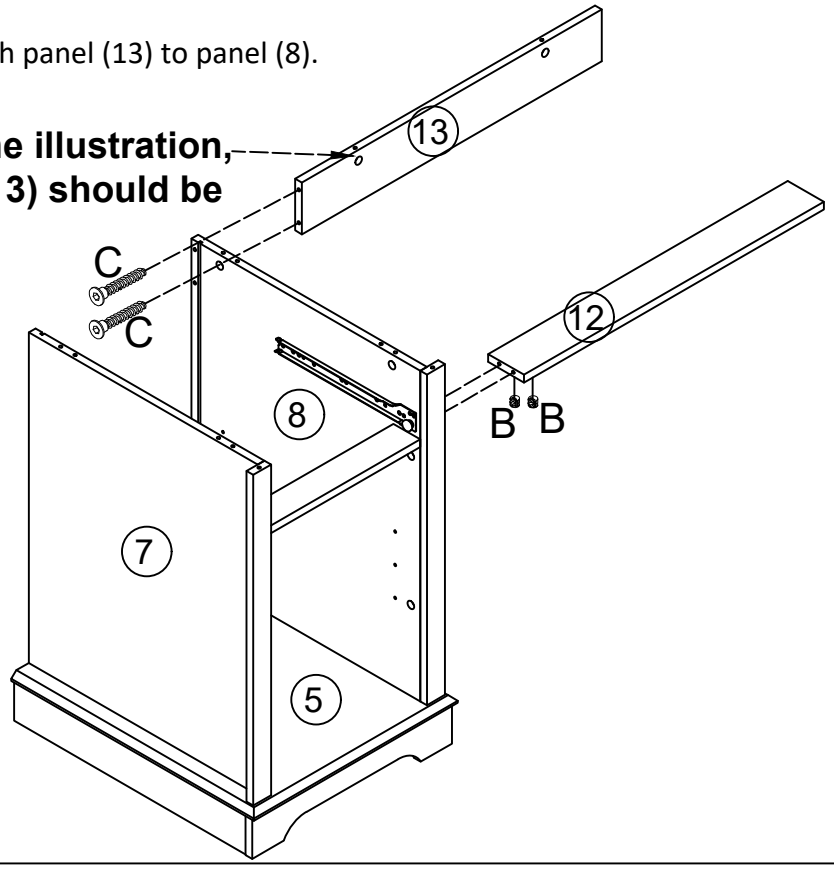

Step 31

l. As shown in the illustration, connect the panel (12) to panel (9), insert the cam lock (B) into the corresponding holes on panel (12), and then use a screwdriver to turn the cam lock (B) clockwise to secure the cam bolt (A).
ll. Use screws (C) to attach panel (13) to panel (9).

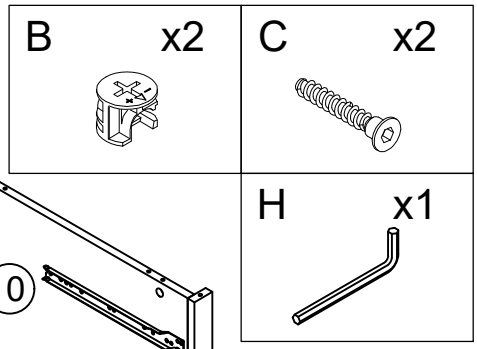

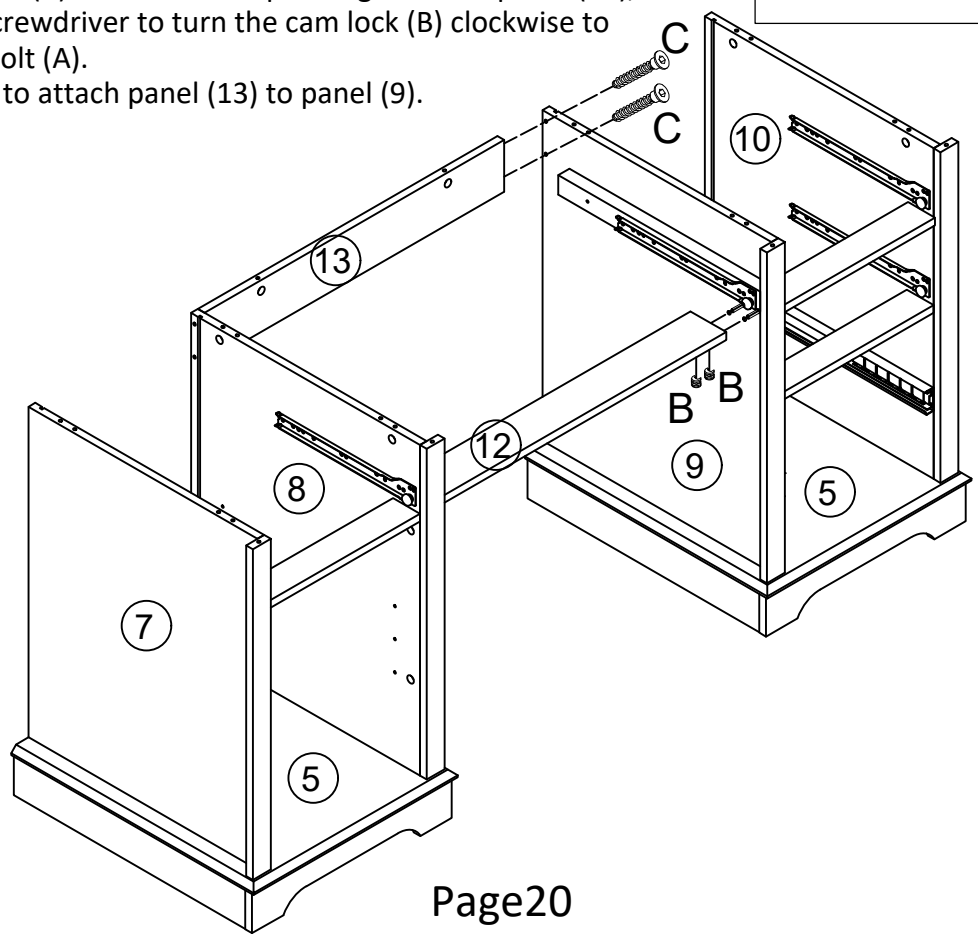

Step 32

l. Install panels (14 and 14) as per diagram and slide them into the grooves until they are fully seated.

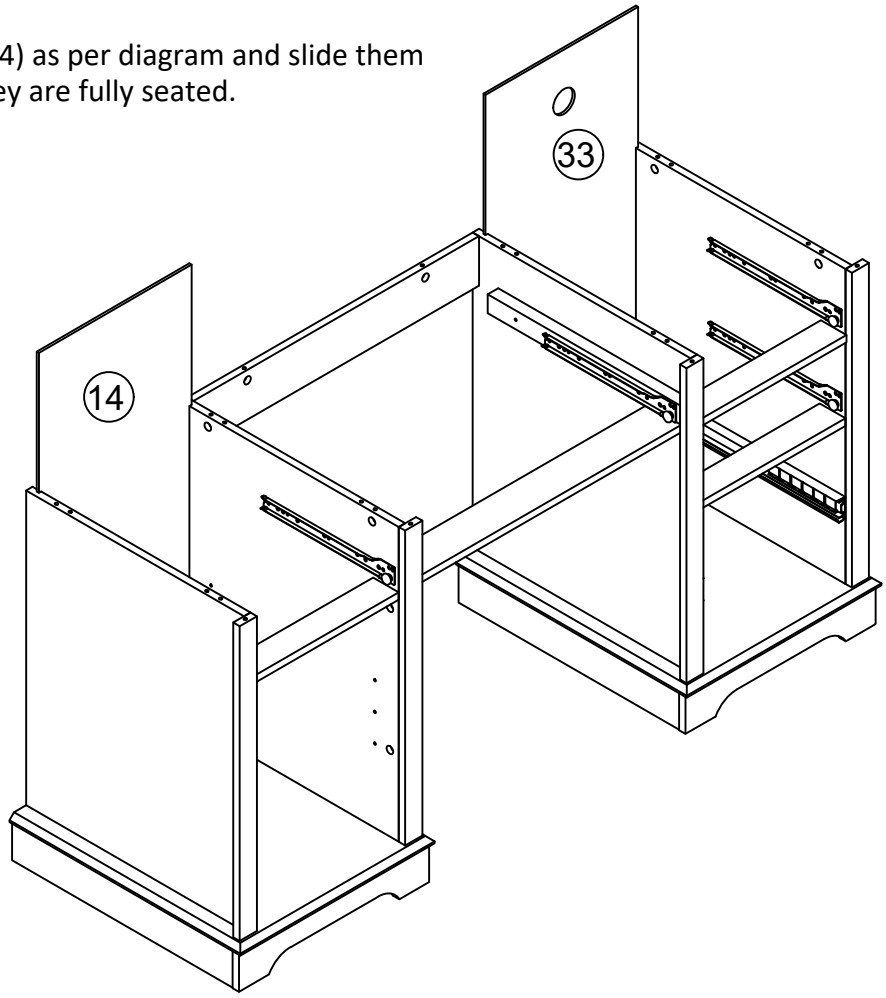

Step 33

l. As shown in the illustration, use a screwdriver to insert the cam bolt (A) into the corresponding holes on panel (15).

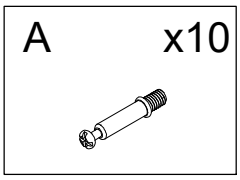

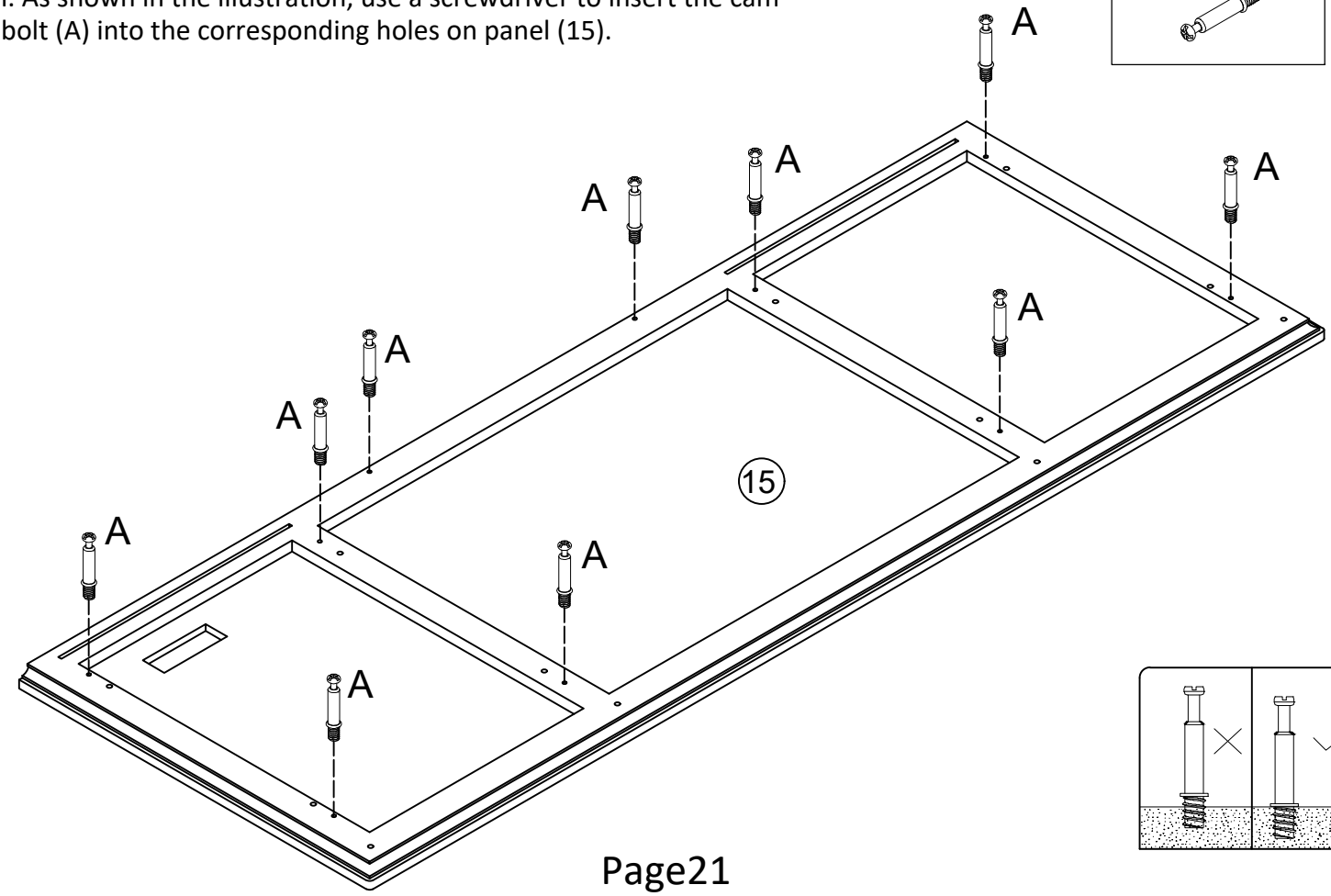

Step 34

B x10	D x12
	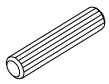

l. Insert the wood dowel (D) into the panel (6、7、8、9 and 10).
ll. As shown in the illustration, connect the panel (15) to panels (7、8、9、10 and 13), insert the cam lock (B) into the corresponding holes on panels (7、8、9、10 and 13), and then use a screwdriver to turn the cam lock (B) clockwise to secure the cam bolt (A).

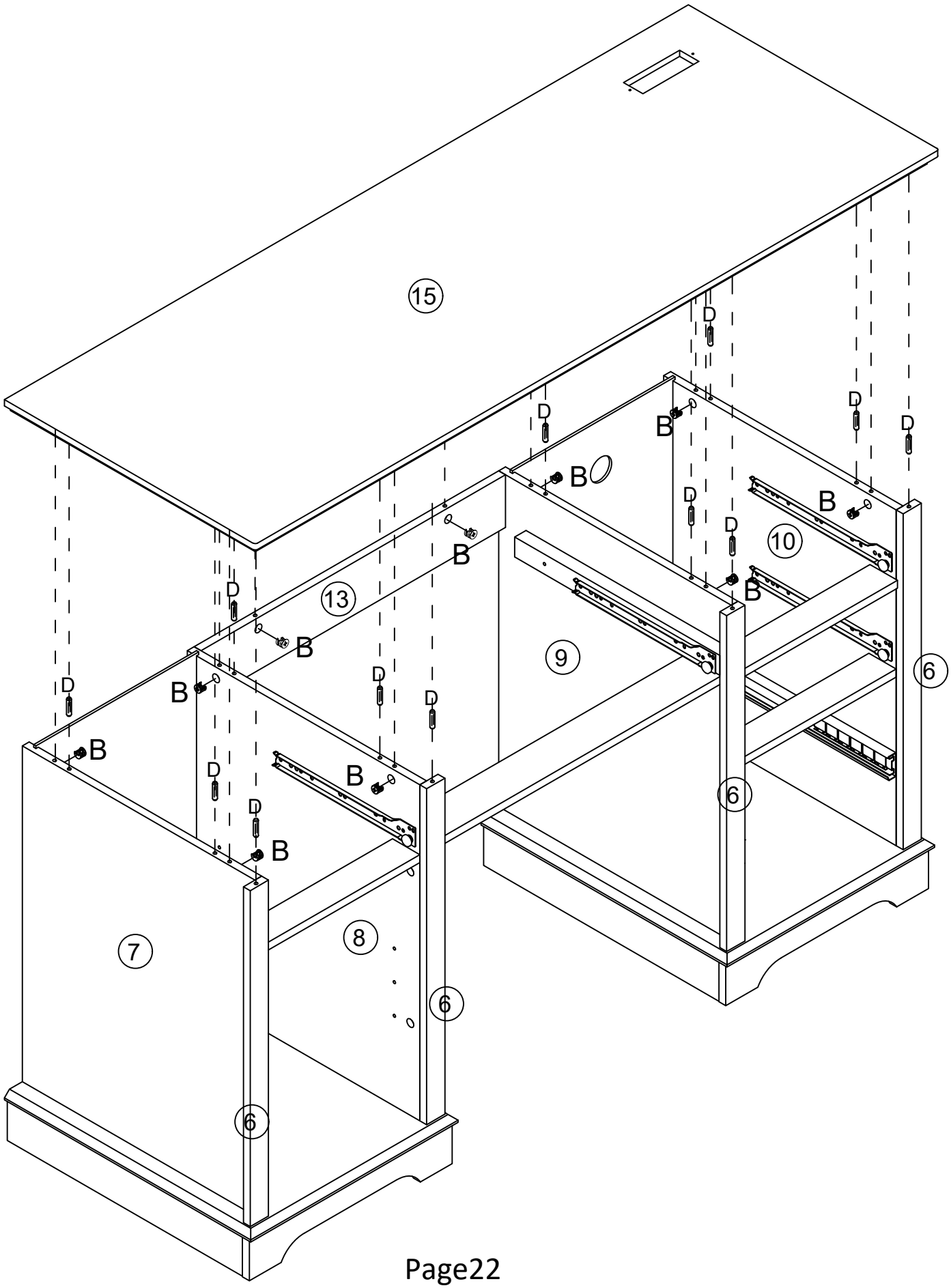

Step 35

l. Insert the thinnest side of the plastic wedge (F) into the gap between the back panel and the cabinet, then secure it with screws (G).

G	x8
F	x8
E	x2
Q	x1

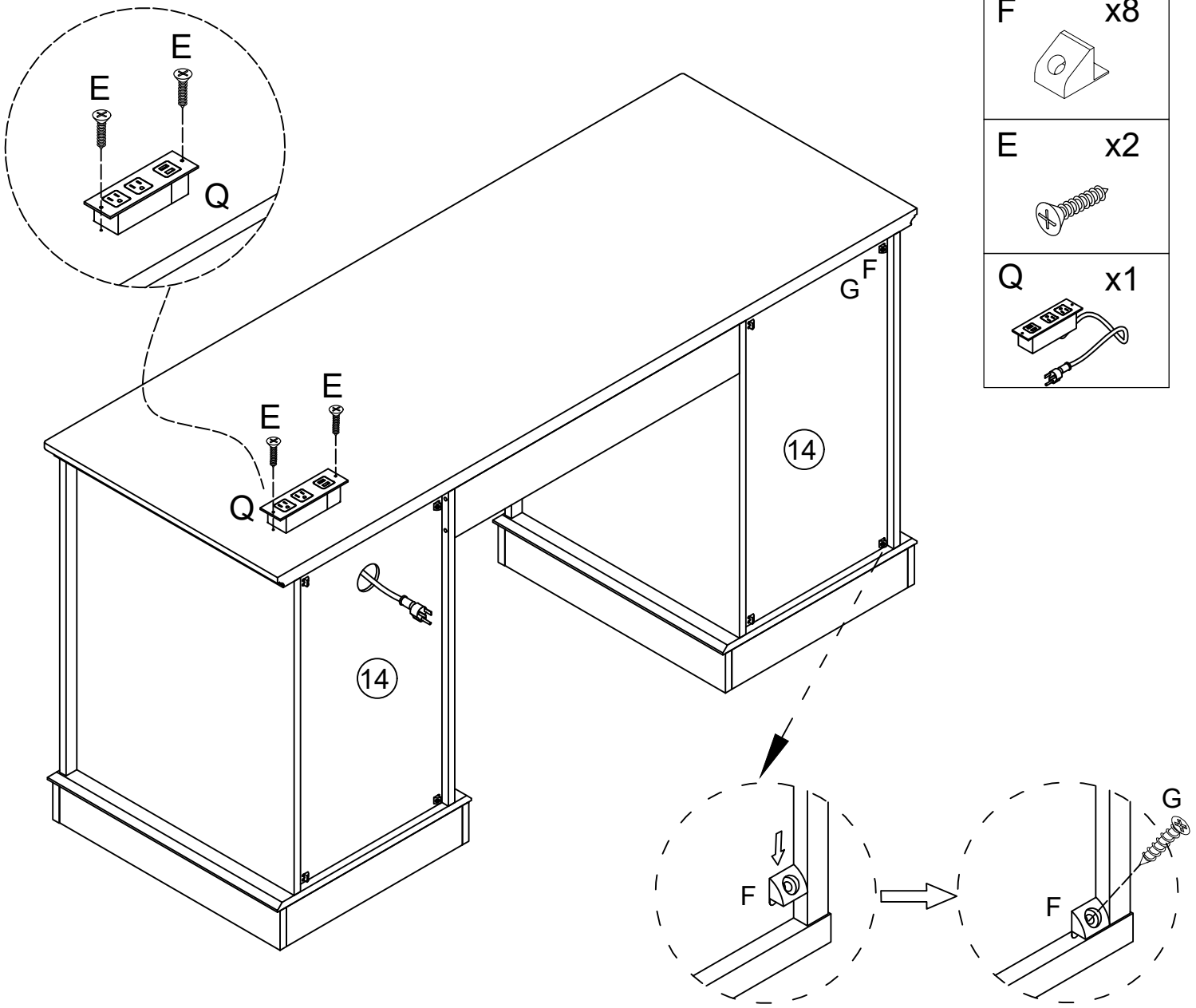

Step 36

M x4

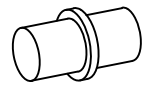

I. Insert the shelf support (M) into the corresponding holes on panels (7 and 8).
II. Then place panel (34) onto the shelf supports (M).

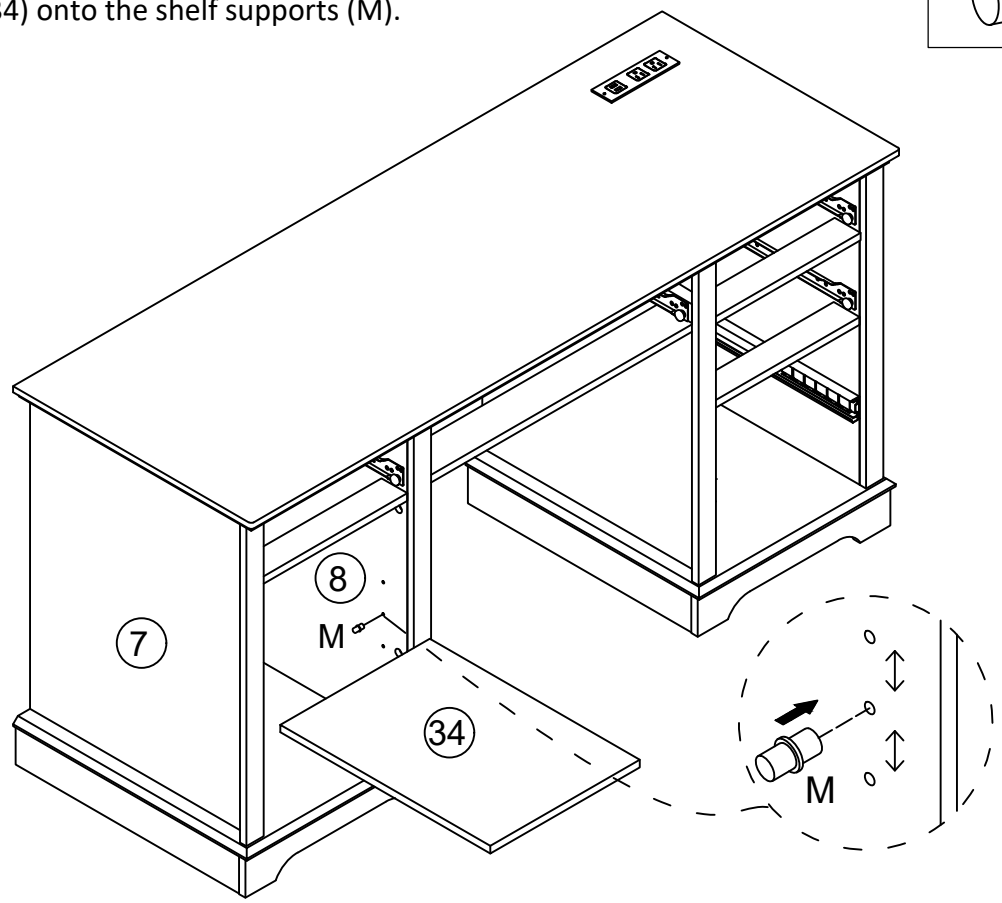

Step 37

L x2



E x4



J x1

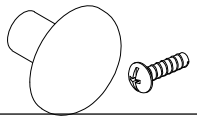

I. Use screws (J) to attach the handle (J) to panels (33).
II. As shown in the illustration, use screws (E) to secure the cabinet hinge (L) to panel (33).

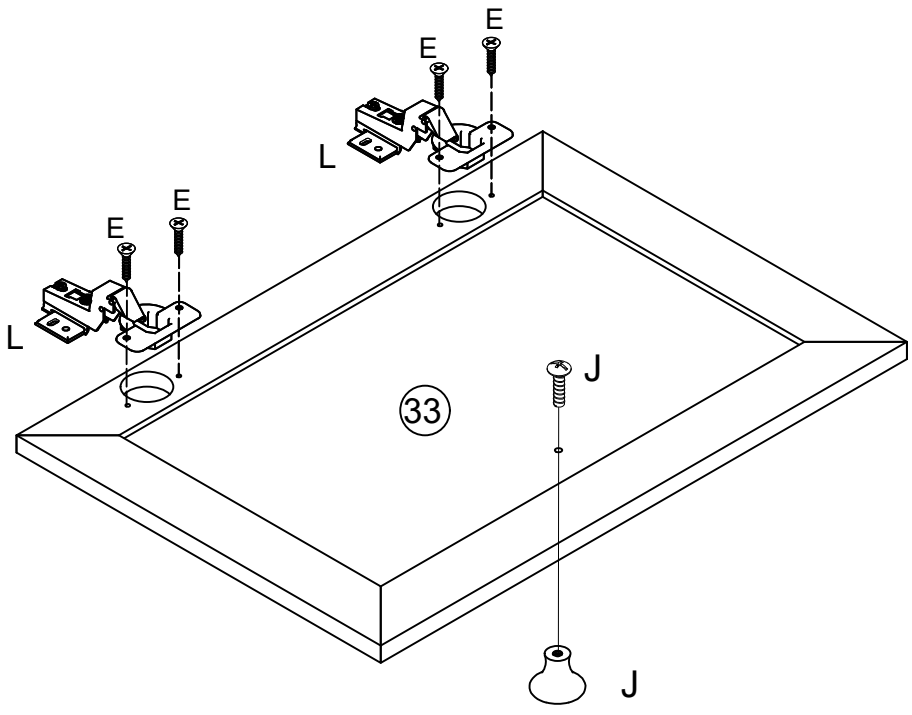

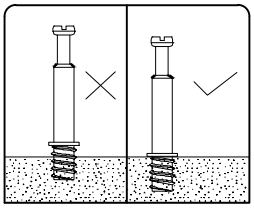

Step 38

l. As shown in the illustration, use screws (E) to secure the cabinet hinge (L) to panel (7).

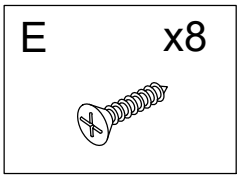

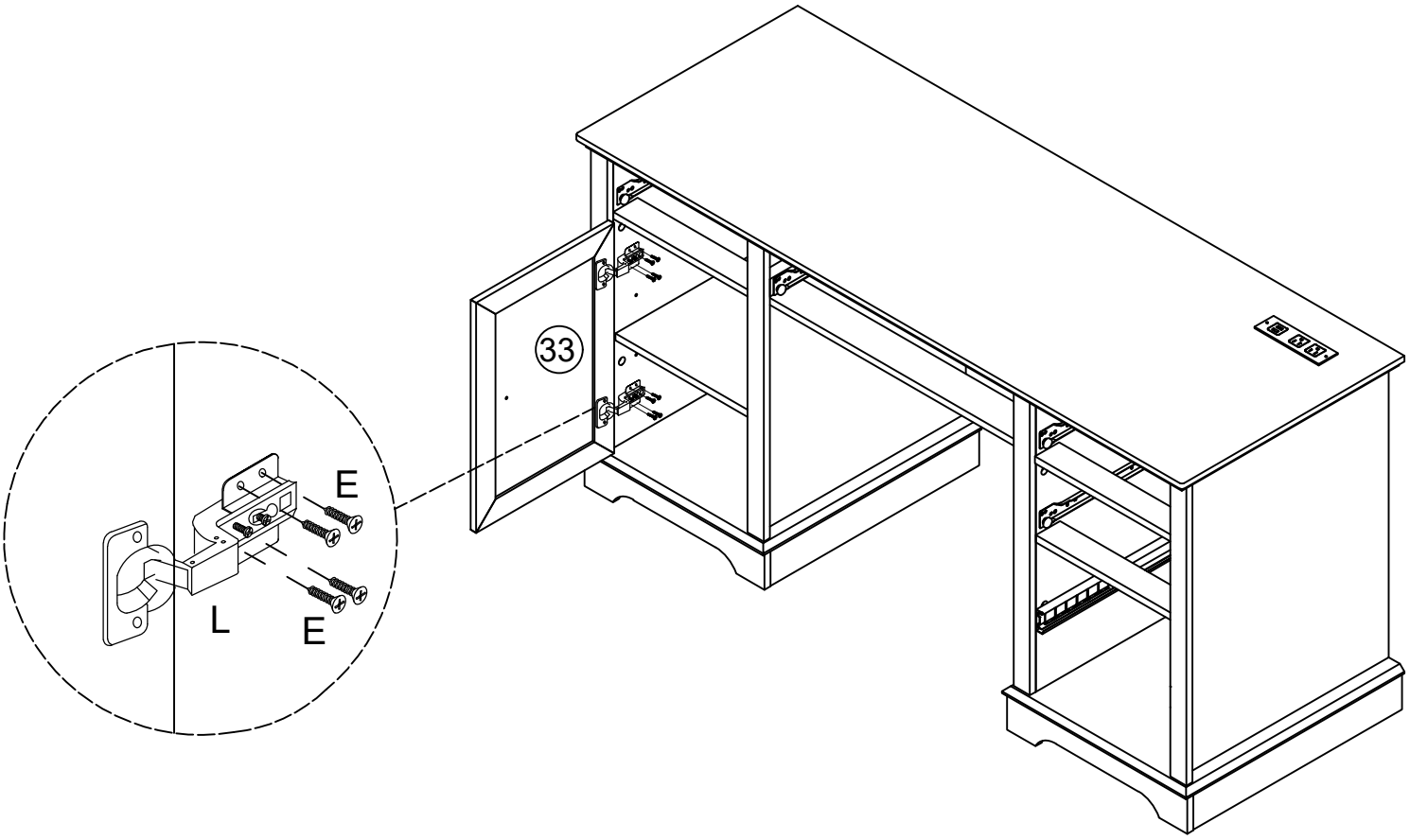

If the cabinet door appears uneven, misaligned left or right, has inconsistent gaps, does not close properly, or does not open and close smoothly, these issues can usually be resolved by adjusting the hinges. Please refer to page 26 for detailed instructions.

The ways to adjust the door

- Before adjusting the hinge, please check whether the cabinet is skewed.
- If the skew can not be repaired, please remove the anti-tipping device first, then adjust the cabinet to vertical position.
- Please adjust the hinge with the door open.
- Please operate it with more than 2 people, one person holds the door and the other one adjusts the screw.

Components Name

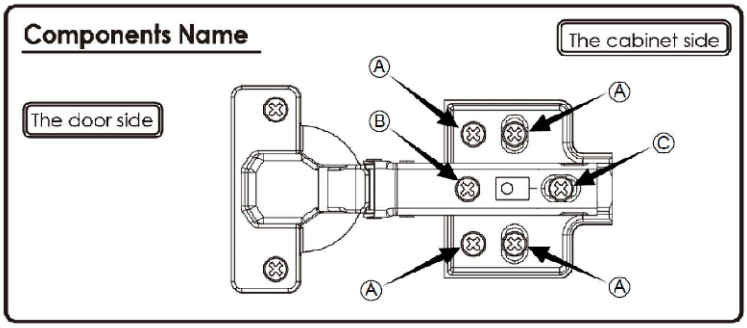

Adjust the depth: If the door is not parallel to the side of the cabinet



Adjust it according to the three steps on the right.

1 Inside the cabinet, turn both hinges to the left to loosen screw "C."

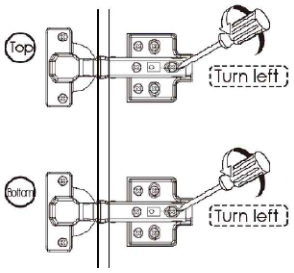

2 Then push the door slightly inward.

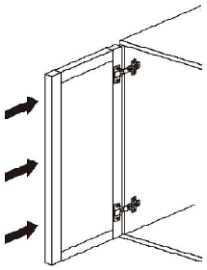

3 Finally, turn both hinges inside the cabinet to the right to tighten screw "C."

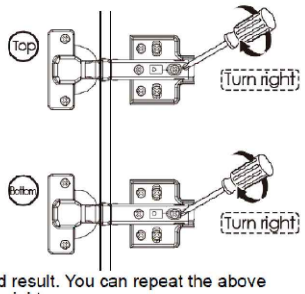

After adjusting screw "C" the door may improve slightly but still not reach the desired result. You can repeat the above steps to fine-tune the adjustment. If there is no change, slightly turn screw "B" to the right.

When door is leaning

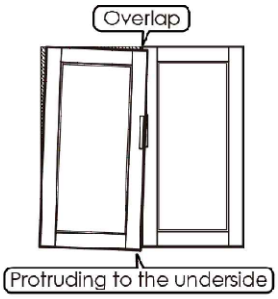

1 Turning screw "B" on the upper hinge inside the cabinet to the left will tilt the top of the door outward.

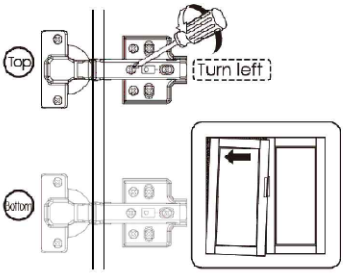

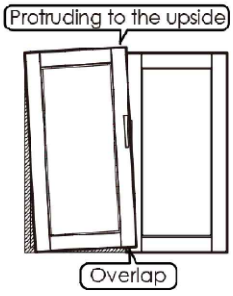

1 Turning screw "B" on the lower hinge inside the cabinet to the left will tilt the bottom of the door outward.

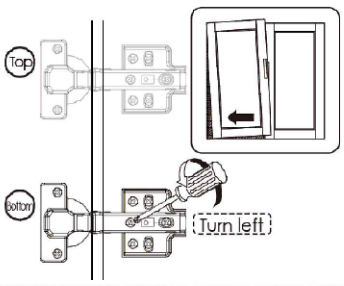

When 2 doors are not tight

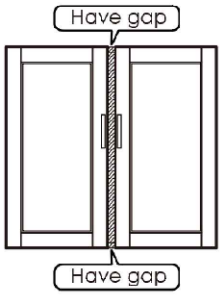

1 To adjust both the left and right doors, turn screw "B" inside the cabinet to the right to move the two doors closer together. Adjust the doors gradually.

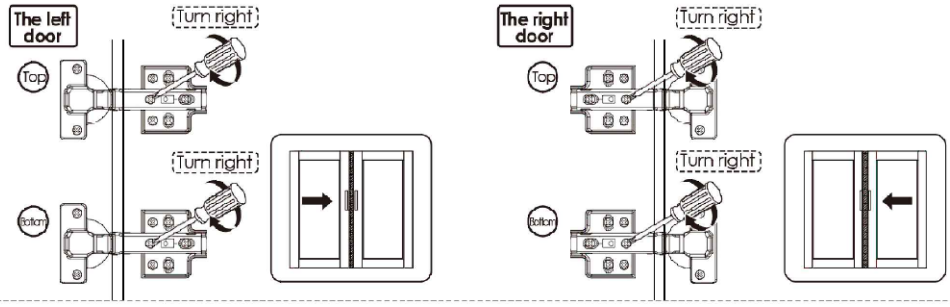

If the two doors overlap, turn screw "B" to the left.

When the door is higher on top

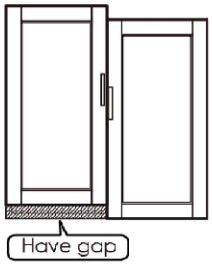

1 To adjust the left door, turn screw "A" on both hinges inside the cabinet to the left to loosen them slightly.

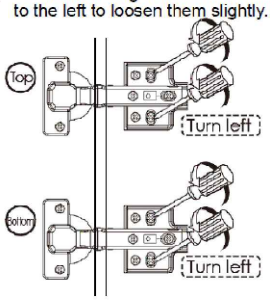

2 Push the left door downward to lower its height so that both doors are aligned at the same level.

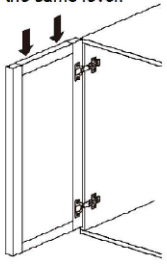

3 Then turn screw "A" to the right to tighten it.

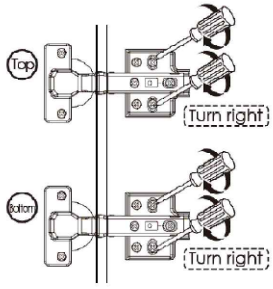

※ If the door is lower on bottom, please lift up the left door slightly on step 2

Step 39

I. Use screws (C) to attach panels (20 and 21) to panel (22).

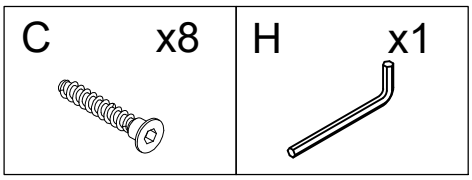

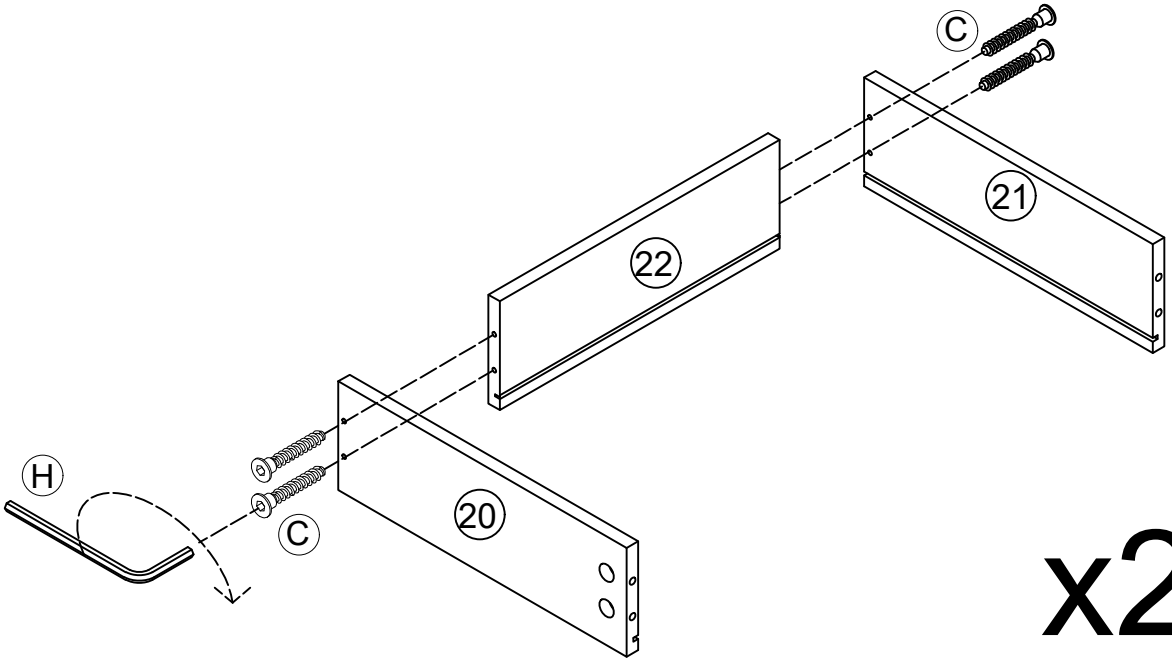

x2

Step 40

I. Install panel (23) as per diagram and slide them into the grooves until they are fully seated.

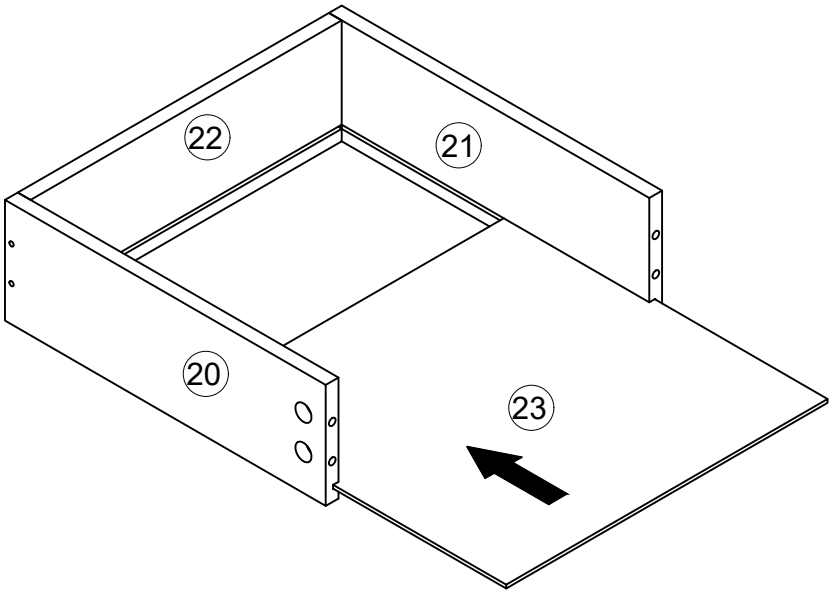

x2

Step 41

I. Use screws (J) to attach the handle (J) to panels (16).
II. As shown in the illustration, use a screwdriver to insert the cam bolt (A) into the corresponding holes on panel (16).

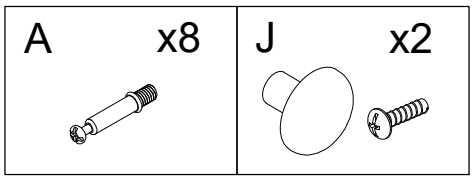

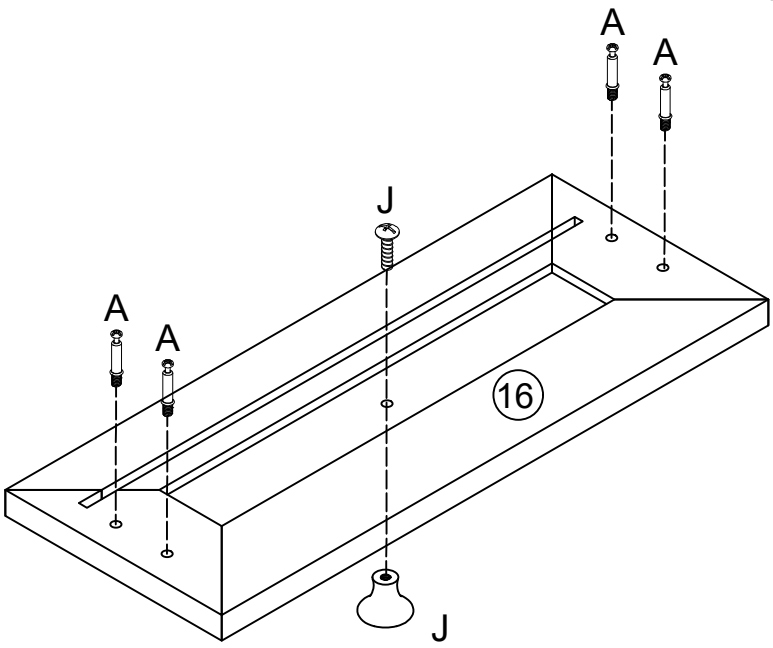

x2

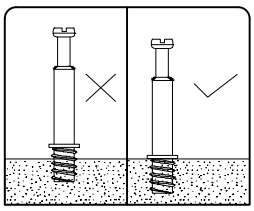

Step 42

I. As shown in the illustration, connect the panel (16) to panels (20 and 21), insert the cam lock (B) into the corresponding holes on panels (20 and 21), and then use a screwdriver to turn the cam lock (B) clockwise to secure the cam bolt (A).

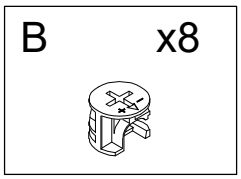

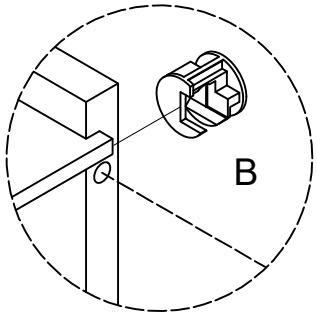

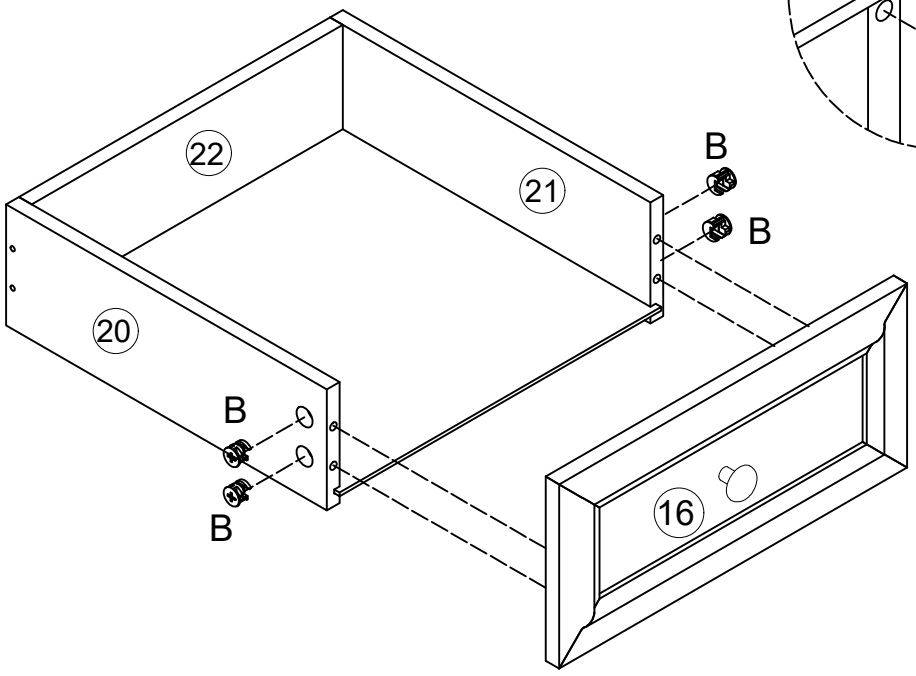

x2

Step 43

I. Use screws (E) to attach the drawer slides (DR) to panel (21).
II. Use screws (E) to attach the drawer slides (DL) to panel (20).

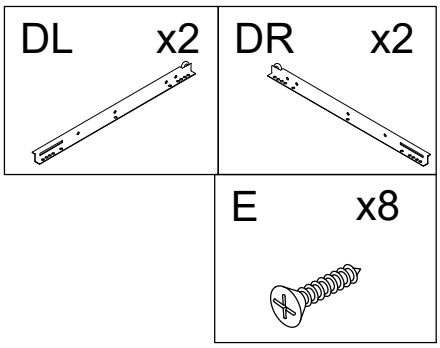

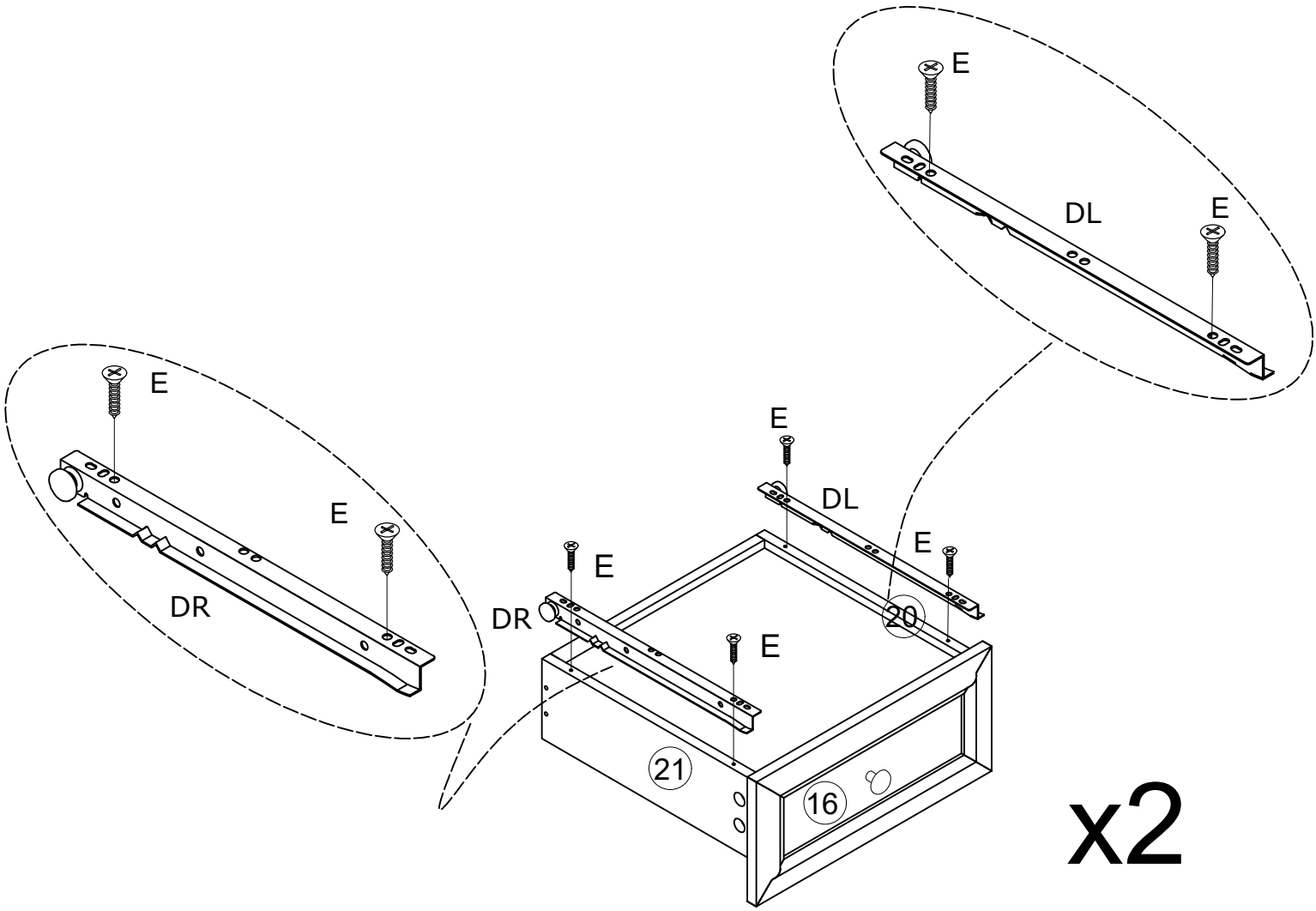

Step 44

I. Use screws (C) to attach panels (20 and 21) to panel (24).

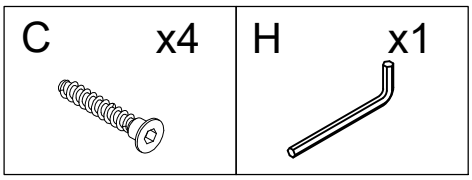

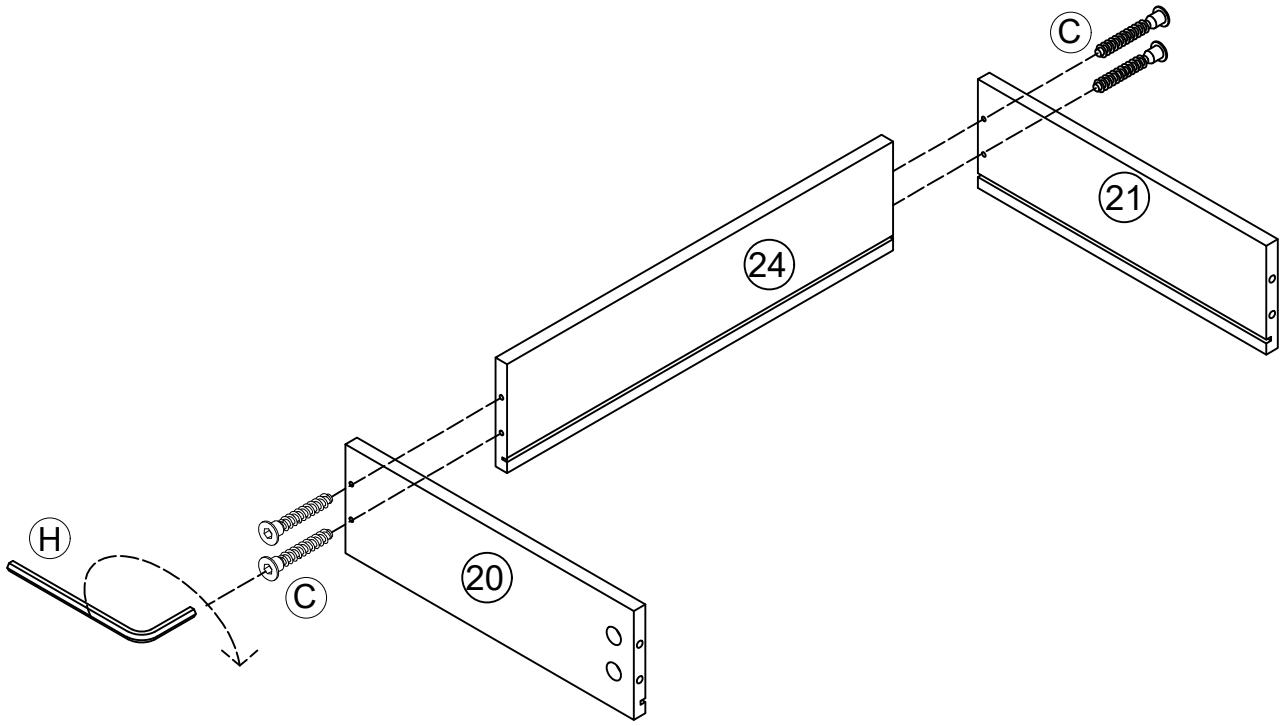

Step 45

I. Install panel (25) as per diagram and slide them into the grooves until they are fully seated.

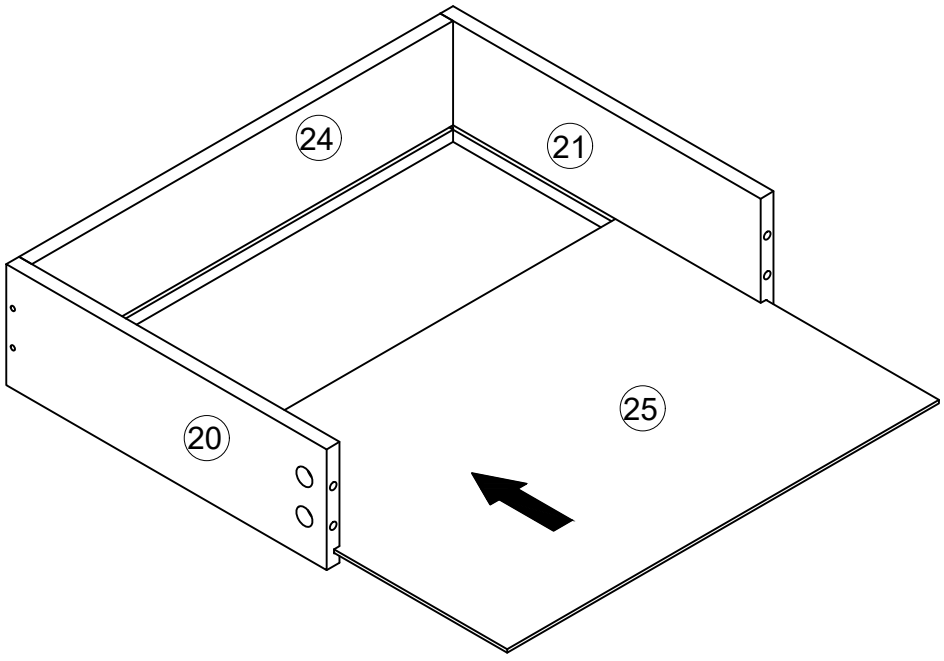

Step 46

I. Use screws (J) to attach the handle (J) to panels (17).
ll. As shown in the illustration, use a screwdriver to insert the cam bolt (A) into the corresponding holes on panel (17).

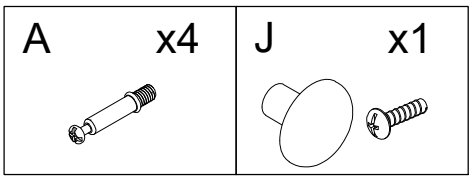

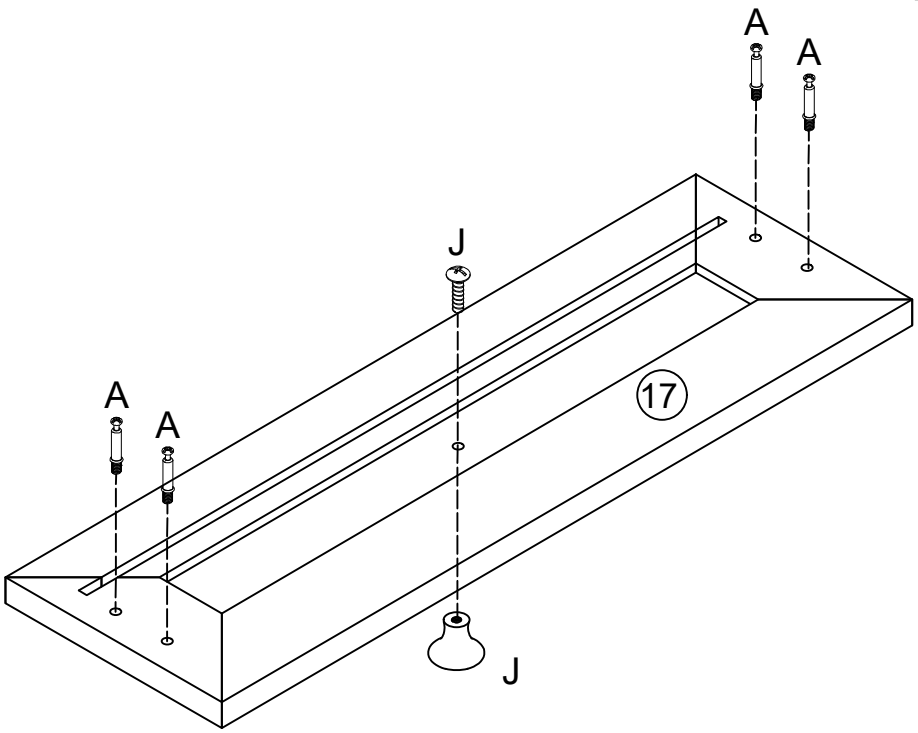

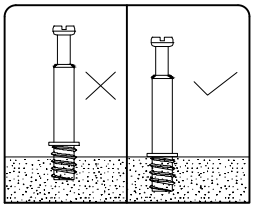

Step 47

I. As shown in the illustration, connect the panel (17) to panels (20 and 21), insert the cam lock (B) into the corresponding holes on panels (20 and 21), and then use a screwdriver to turn the cam lock (B) clockwise to secure the cam bolt (A).

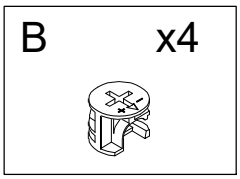

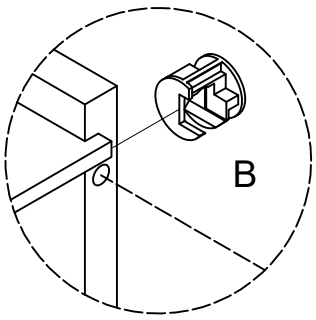

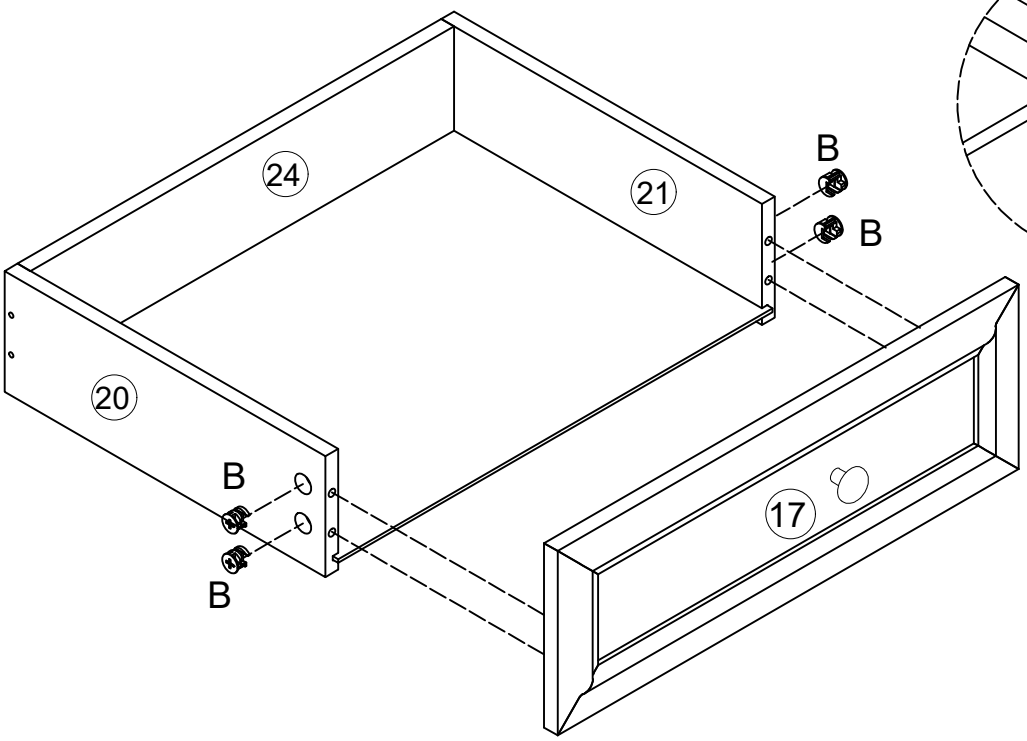

Step 48

I. Use screws (E) to attach the drawer slides (DR) to panel (21).
II. Use screws (E) to attach the drawer slides (DL) to panel (20).

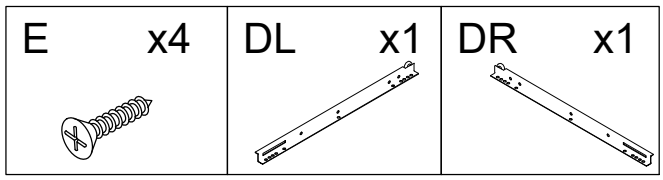

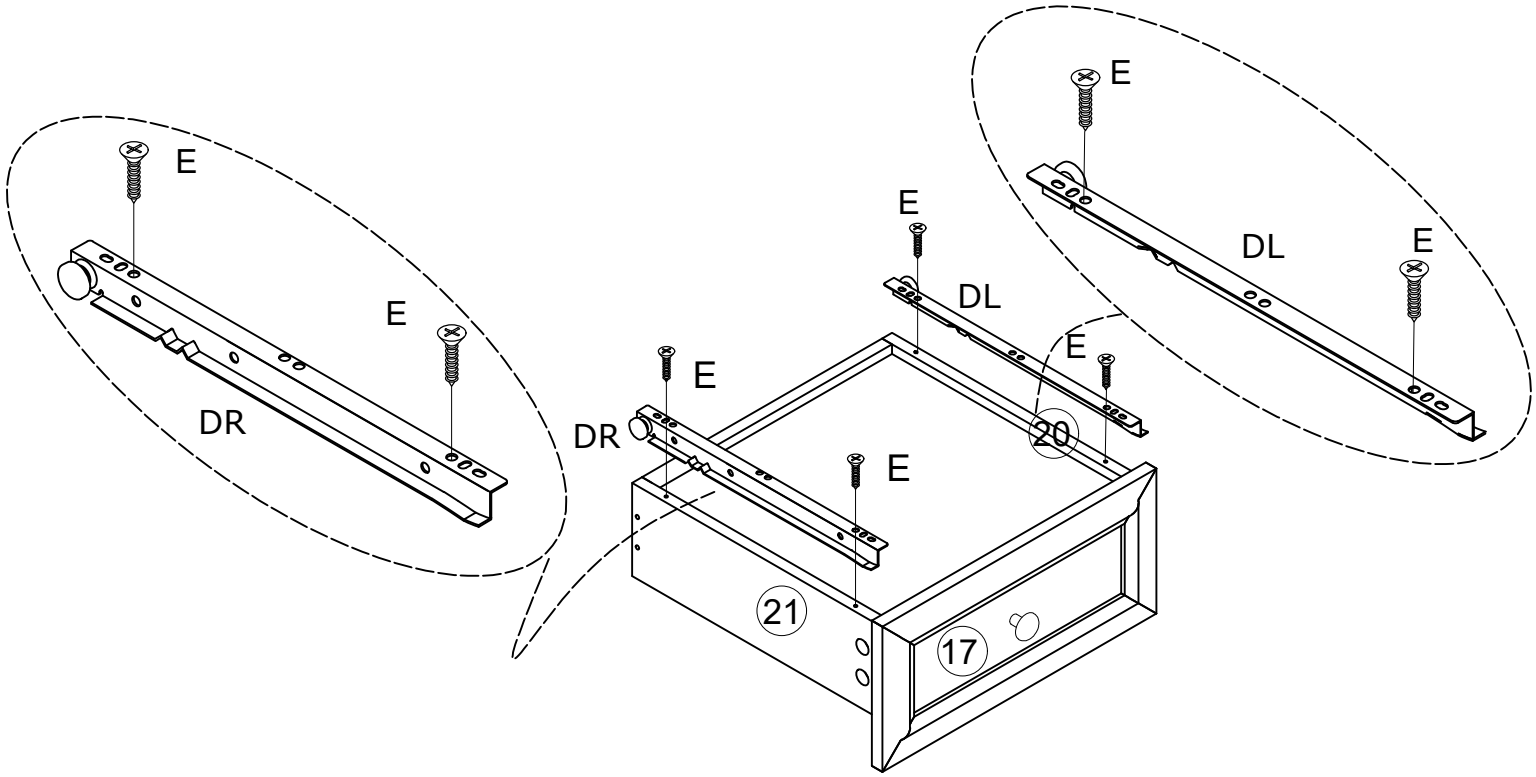

Step 49

I. Use screws (C) to attach panels (26 and 27) to panel (28).

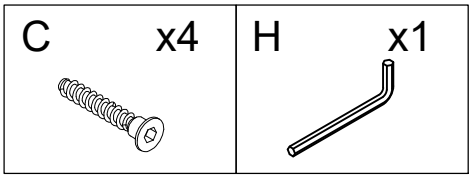

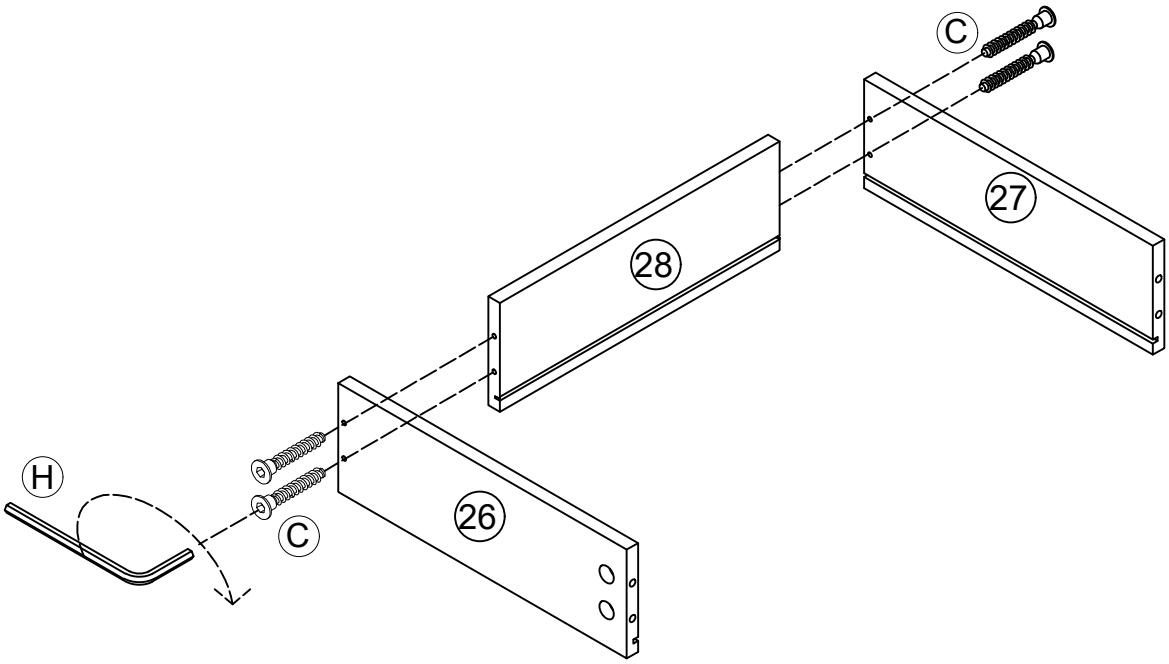

Step 50

I. Install panels (23) as per diagram and slide them into the grooves until they are fully seated.

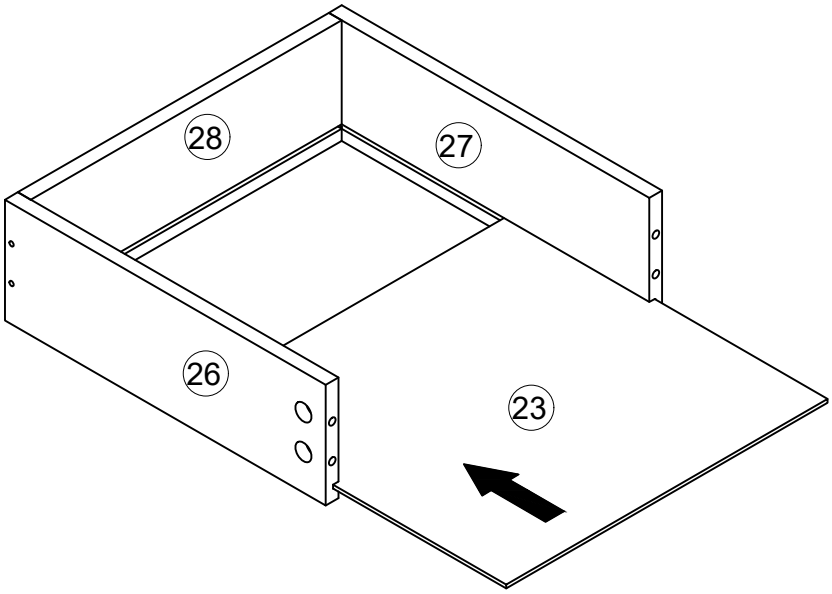

Step 51

I. Use screws (J) to attach the handle (J) to panels (18).
II. As shown in the illustration, use a screwdriver to insert the cam bolt (A) into the corresponding holes on panel (18).

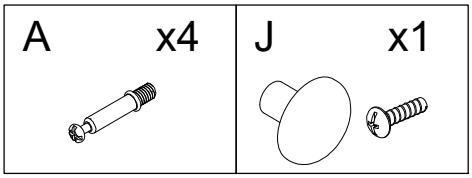

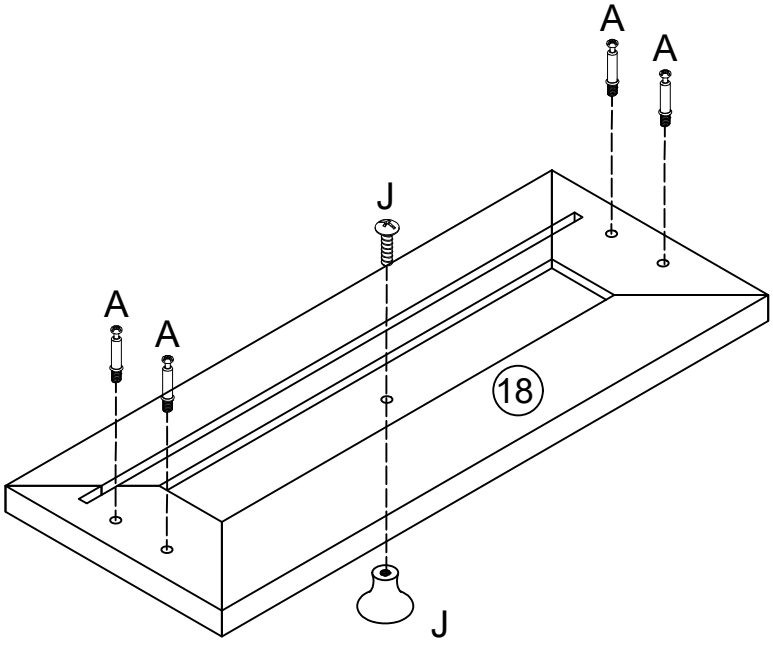

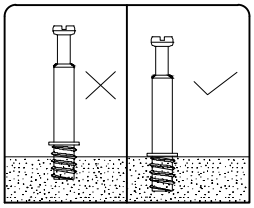

Step 52

B	x4

I. As shown in the illustration, connect the panel (18) to panels (20 and 21), insert the cam lock (B) into the corresponding holes on panels (20 and 21), and then use a screwdriver to turn the cam lock (B) clockwise to secure the cam bolt (A).

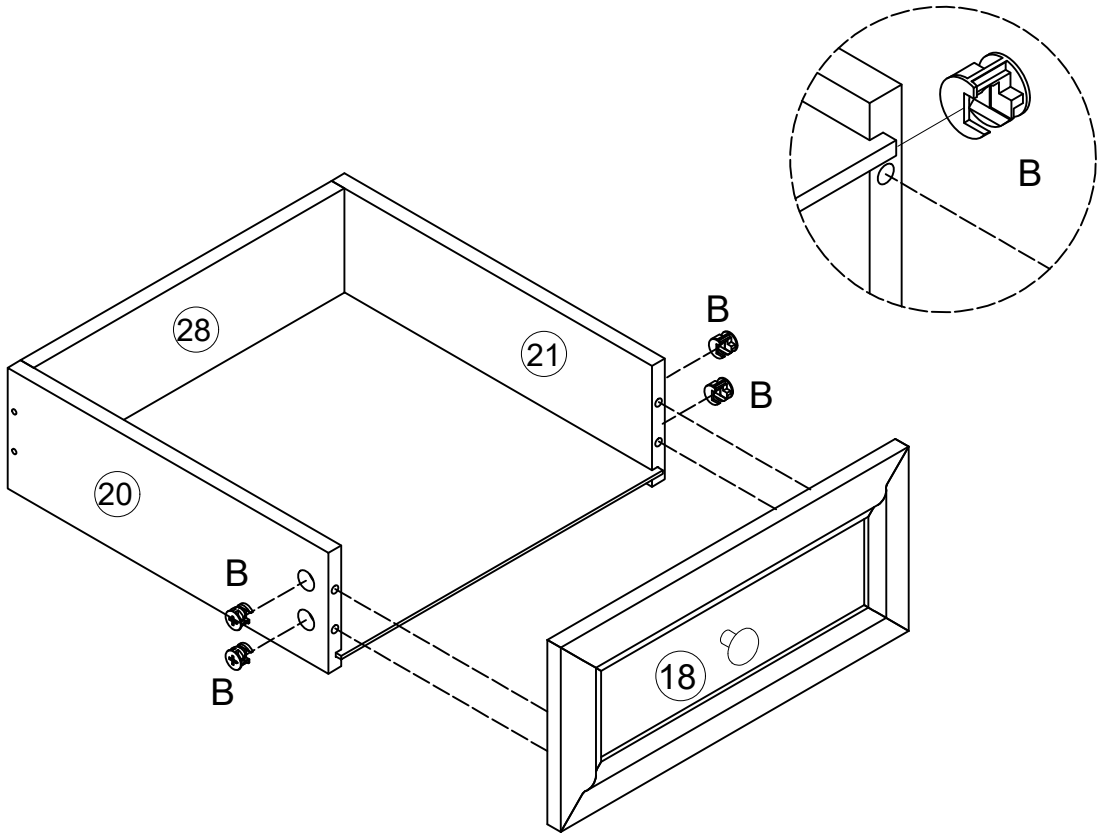

Step 53

E	x4	DL	x1	DR	x1

I. Use screws (E) to attach the drawer slides (DR) to panel (21).
II. Use screws (E) to attach the drawer slides (DL) to panel (20).

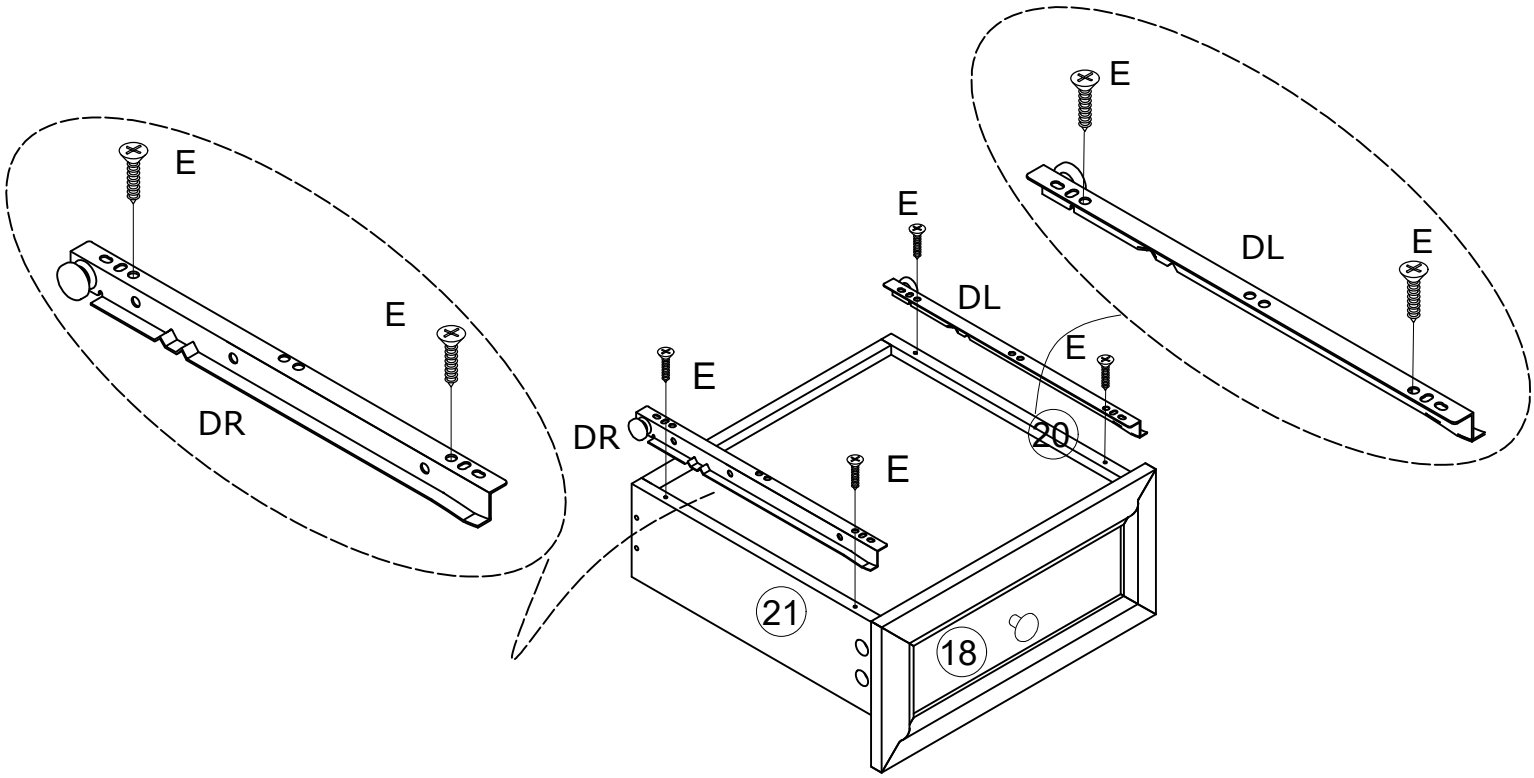

Step 54

I. Use screws (C) to attach panel (31) to panels (29 and 30).

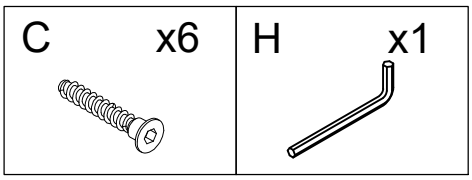

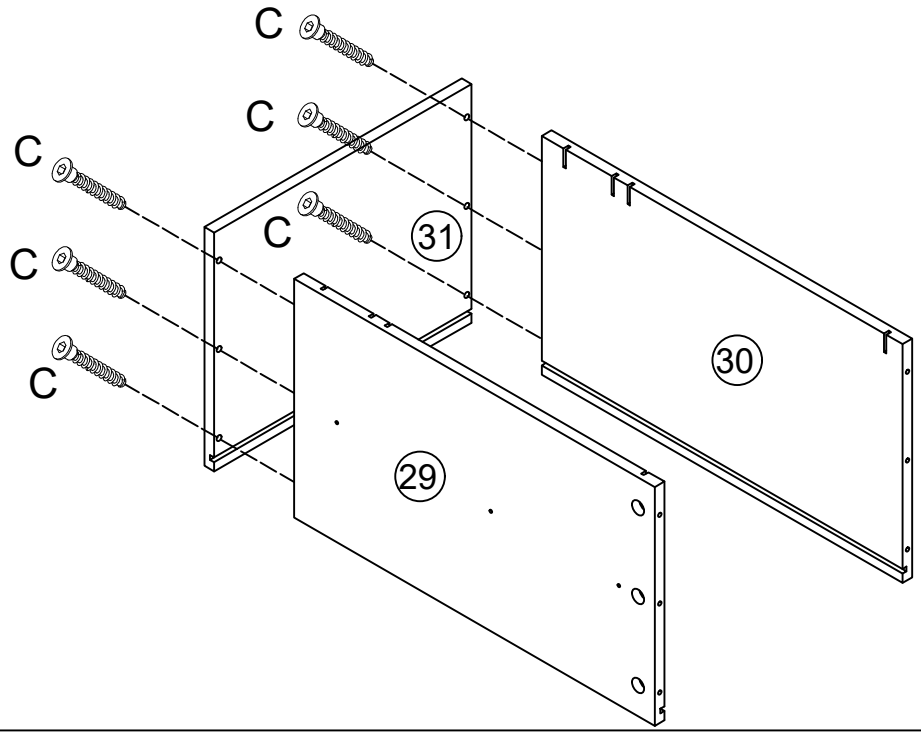

Step 55

I. Install panels (32) as per diagram and slide them into the grooves until they are fully seated.

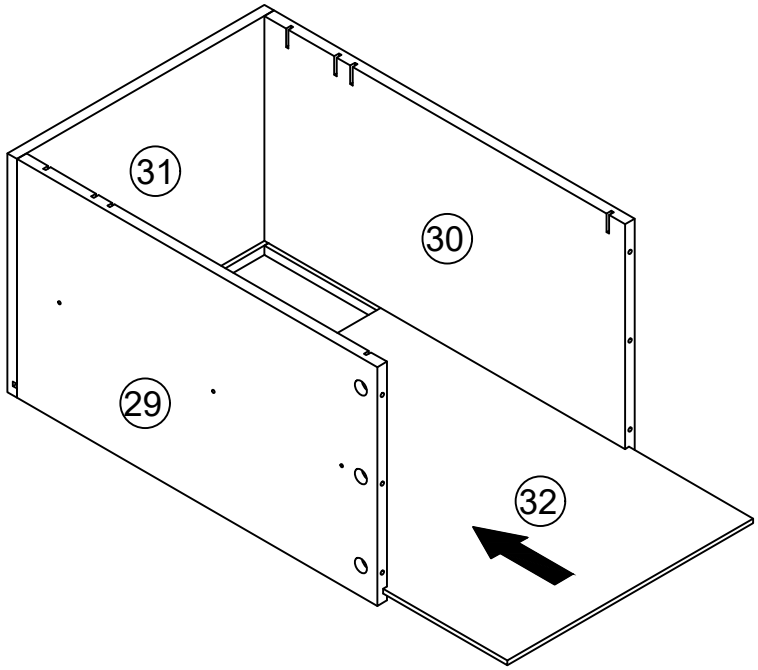

Step 56

I. Use screws (J) to attach the handle (J) to panels (19).
II. As shown in the illustration, use a screwdriver to insert the cam bolt (A) into the corresponding holes on panel (19).

A x6	J x1
	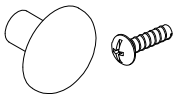

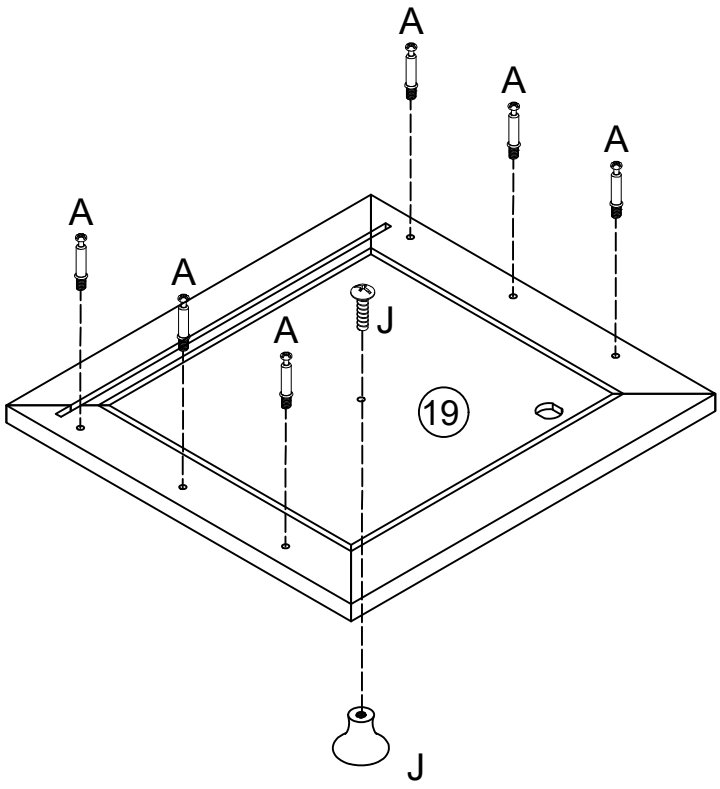

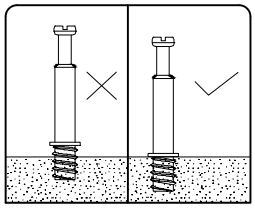

Step 57

I. As shown in the illustration, connect the panel (19) to panels (29 and 30), insert the cam lock (B) into the corresponding holes on panels (29 and 30), and then use a screwdriver to turn the cam lock (B) clockwise to secure the cam bolt (A).

B x6


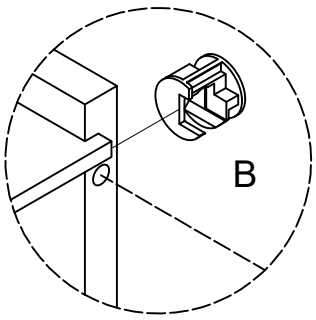

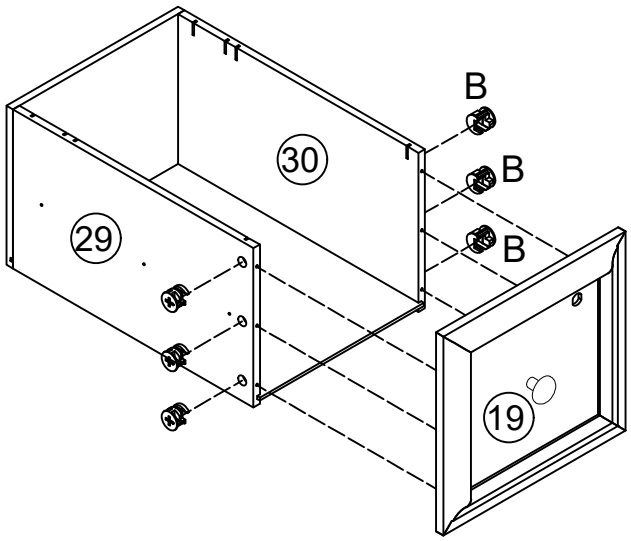

Step 58

I. Place file support shelf (T01) on panels (29 and 30) as per diagram.

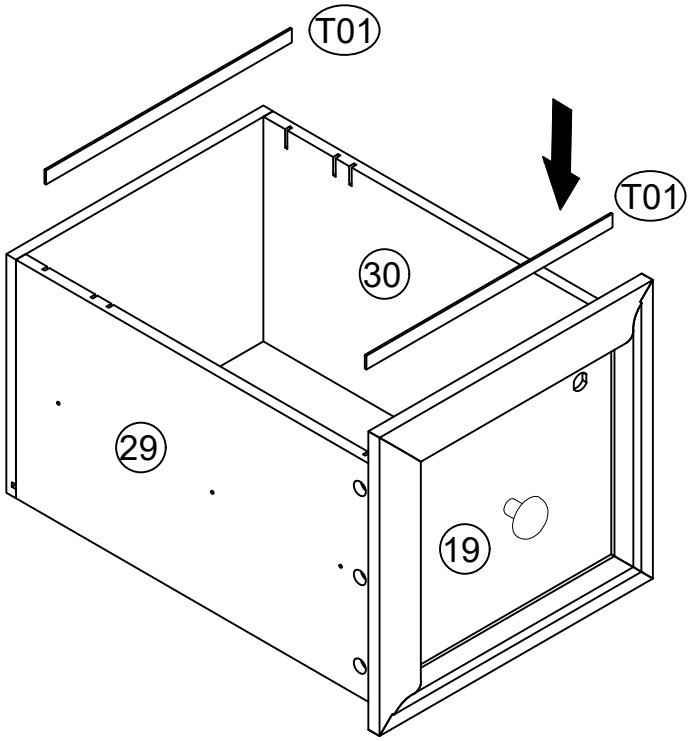

Step 59

I. Use screws (E) to attach the slide rail (O2) to panels (29 and 30).

E x6	O 2 x2

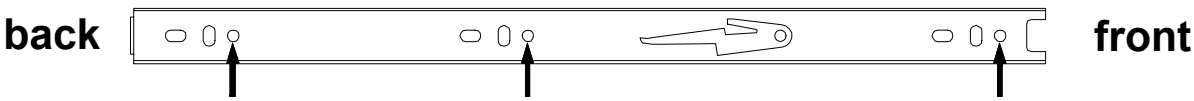

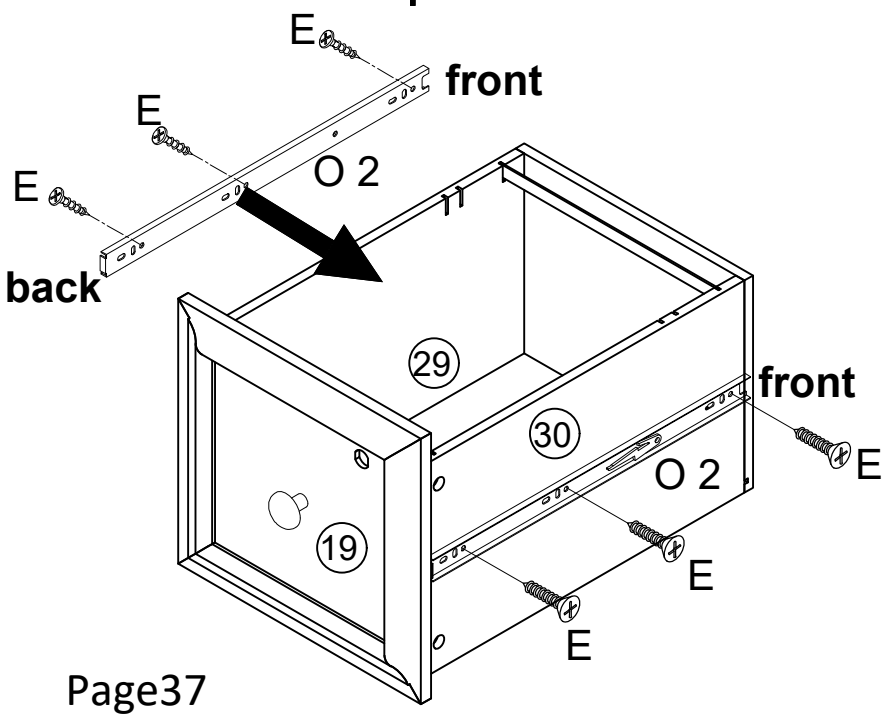

Step 60

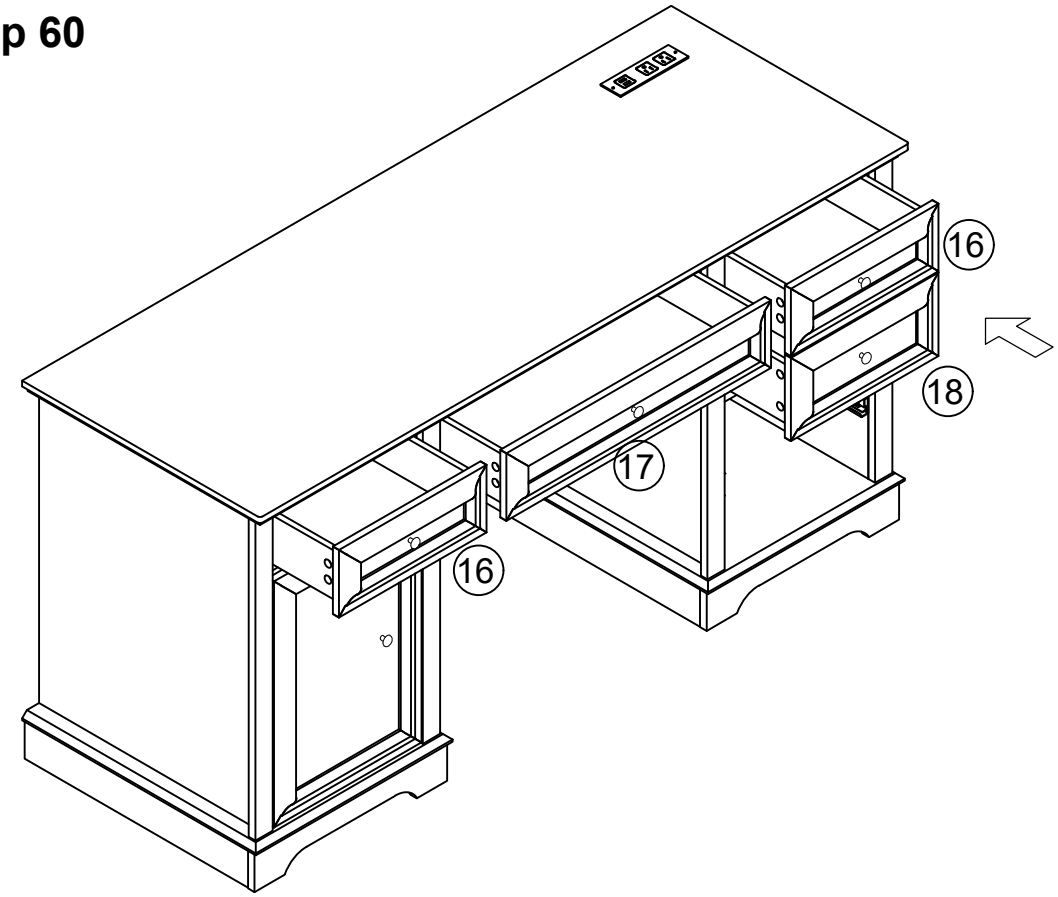

1.Please ensure that you have matched the wheels on both sides of the drawer with the wheels on rails installed before push in the drawer.

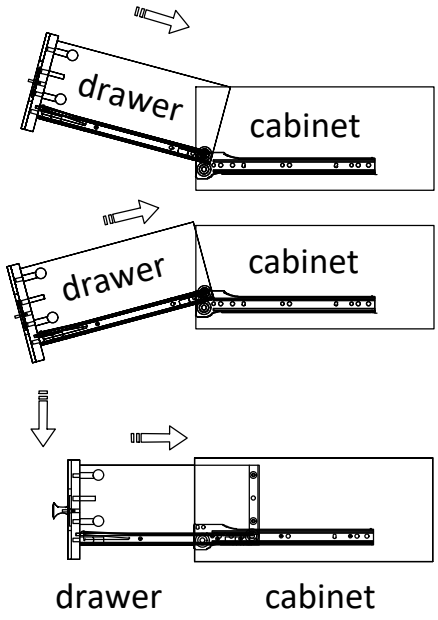

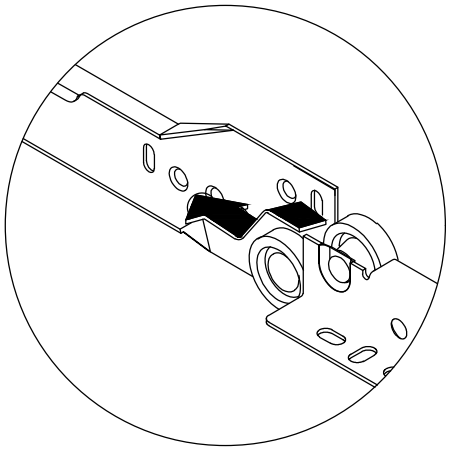

As shown in the picture, connect the pulley on the drawer to the pulley on the cabinet and push it forward.

2.If the following occurs, redo the first two step.

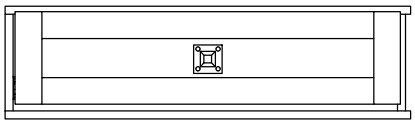

(both wheel are off the rails)

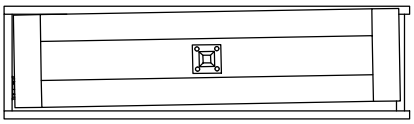

(one wheel is off the rail)

Step 61

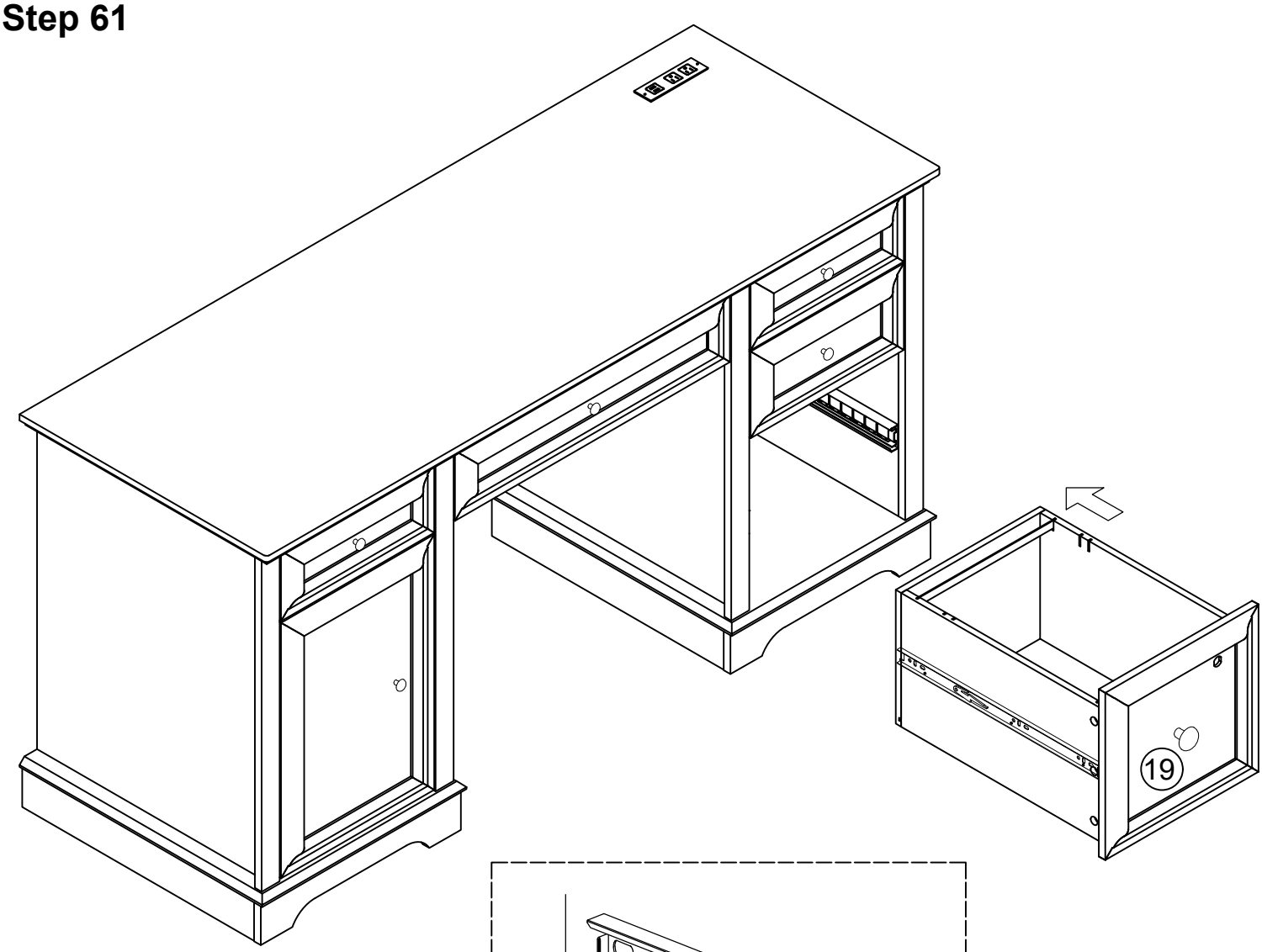

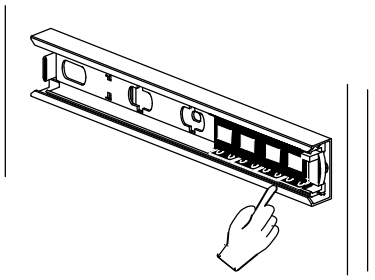

Move the balls of the slide rails on both sides to the position as shown in the figure

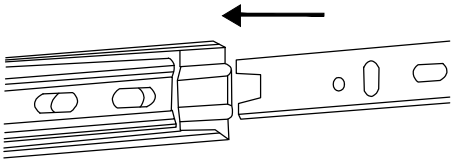

Slide rails on both sides are inserted into the slide groove at the same time

Step 62

Drawer Lock Installation Instructions

1.Disassemble the buckle P sequentially into four components: P4, P3, P2, and P1.

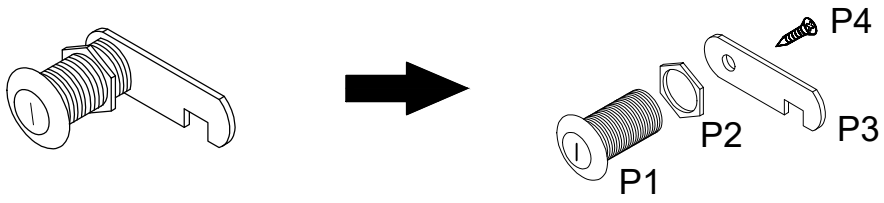

2.Referring to the diagram, insert the separated latch part P1 through the pre-drilled hole in the door panel, secure it with P2 and tighten the screw, then snap P3 into place and install it with screw P4.

