INSTRUCTION MANUAL

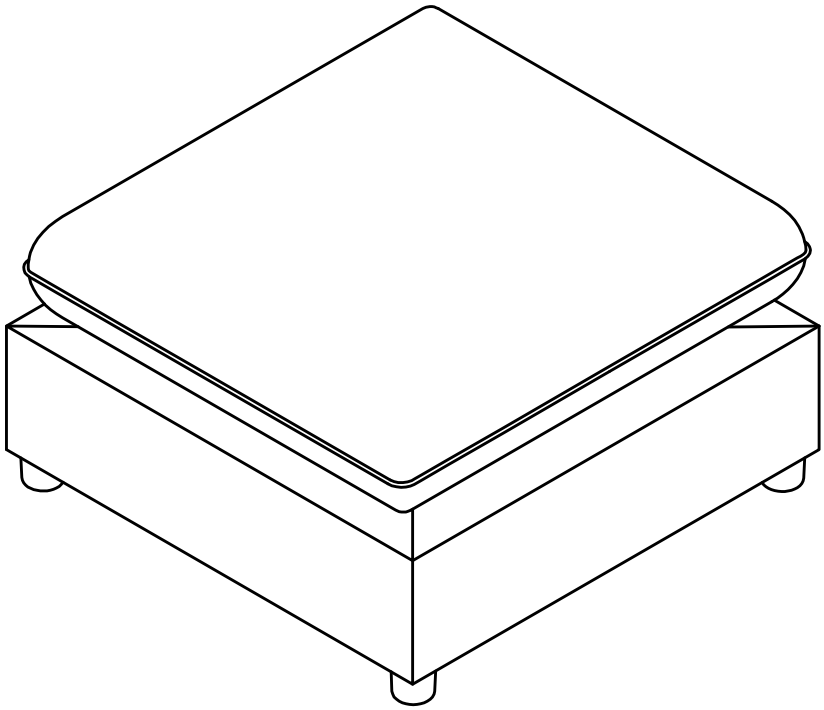

CUSTOMER SERVICE

Extremely Important Notice Before Assemly

① For any damages or structure issues, you're highly recommended to reach out us **with pictures offered;**

② For reporting missed parts, please clarify us the **part number** complies with the manual to speed-up the communication phrase;

③ **Don't** secure the screws to a **100% degree** until you have **aligned up** all the holes successfully. **Misalignment** will lead to failure on the sofa's stability.

PRE-ASSEMBLY INFORMATION

NOTICE

- Please keep this manual and hand it over when you transfer the product .
- Please read the following instructions carefully and use the product accordingly.
- This summary many not include every detail off all variations and considered steps. Please contact us when further information and help are needed.
- Please do not exceed the weight limitations of this item.
- Do not stand on or use any part of this item as a step ladder.
- If any parts are missing, broken, damaged, or worn, stop using this item until repair are made and/or factory replacement parts are installed.
- Please assemble the item in a spacious room and do not place the unwrapped product directly on the ground to avoid damage
- Do not use this item in a way inconsistent with the manufacturer' s instructions as this could void the product warranty
- Periodically inspect screw tightness while the product is use . If necessary , retighten to ensure structural integrity
- To avoid the potential dangers of suffocation, please keep all parts and packaging (films, plastic bags and foam, etc.) away from children and pets.
- Do not use or store this item in the proximity of open flame or flammable/combustible chemicals.
- Do not expose product to direct sunlight exposure or rain , and do not put it in a humid place. failure to do so may accelerate the distortion or discoloration.

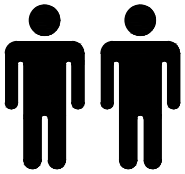

TWO PERSON ASSEMBLY

UP TO 30 MINUTES
FOR ASSEMBLY

WEIGHT LIMITATION
580 LBS

IMPORTANT

1. Remember to remove the parts packed under the bottom of seat frame.
2. Do not tighten bolts/ screws completely until all bolts / screws are lined up and inserted into holes.
3. Do not over tighten screws and bolts to avoid stripping
4. Please use hand tools to assemble this product. If you're using power tools, remember to set the tool to low torque to avoid damage.
5. The modular sectional will be shipped in multiple parcels, please don't assemble them until receive all the boxes.

ASSEMBLY INSTRUCTION

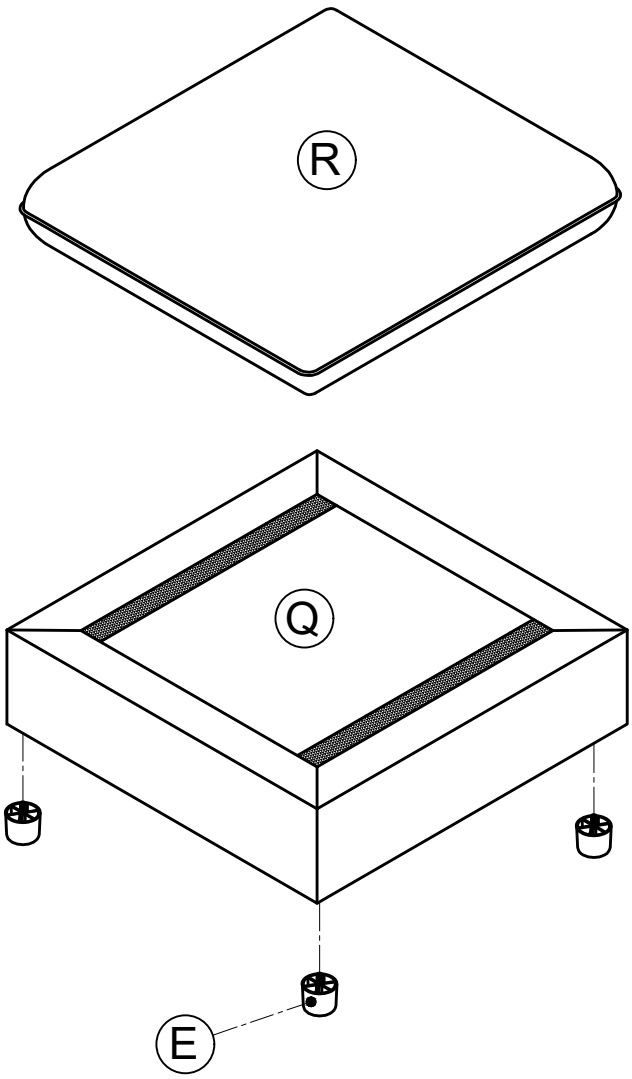

PARTS LIST

Q	R	E
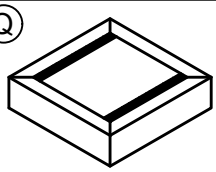	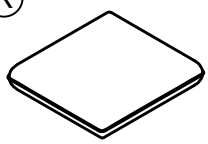	
Ottoman Frame x 1 pc	Ottoman Seat Cushion x 1 pc	Round Legs x 4 pcs

PART LIST

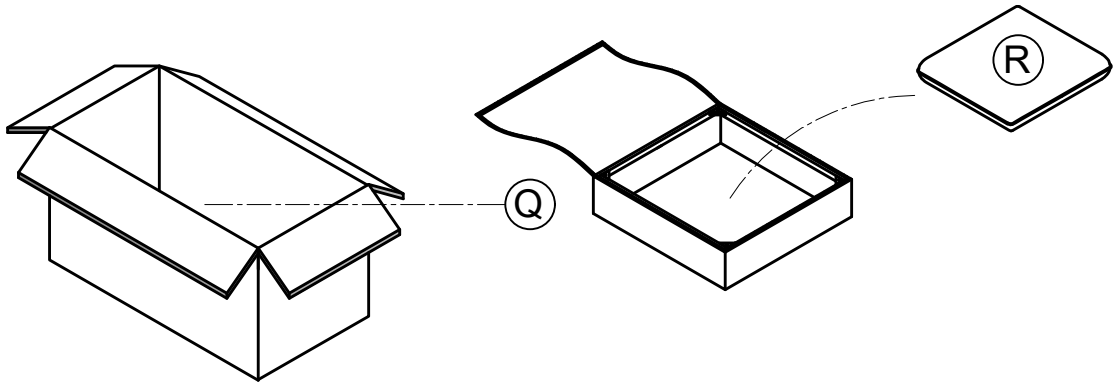

E x 4 pcs

STEP 1:

- Screw Round Legs (4E) into bottom of Ottoman Frame (Q).

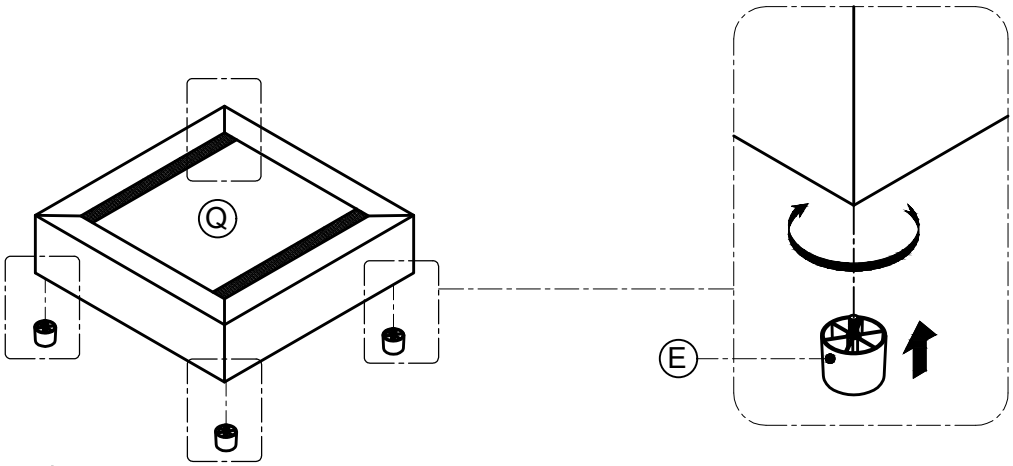

E x 4 pcs

STEP 2:

- Place the Ottoman Seat Cushion (R) of the Ottoman Frame (Q).

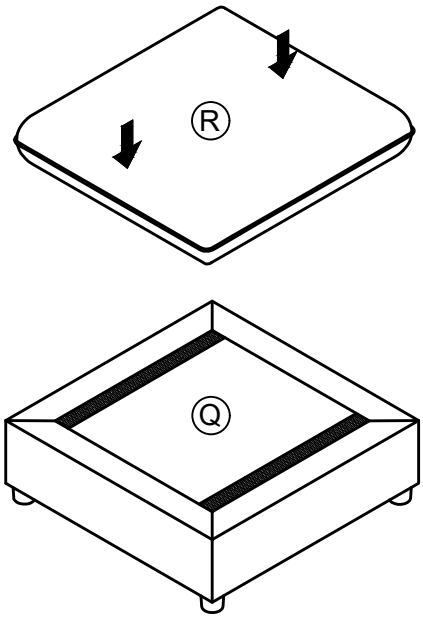

STEP 3:

COMPLETED

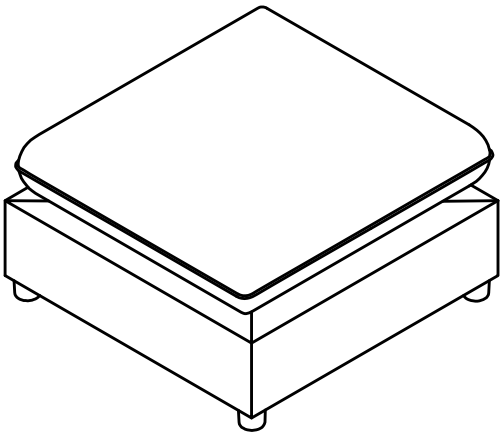

Option-1

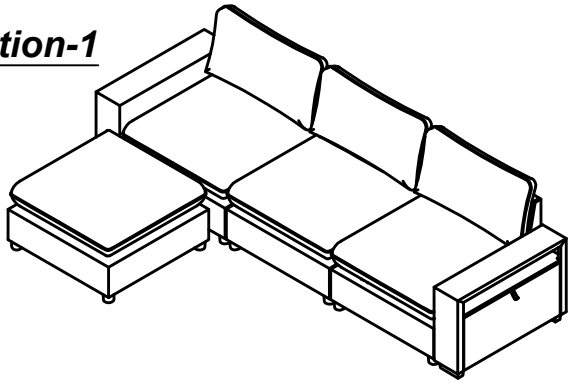

Option-2

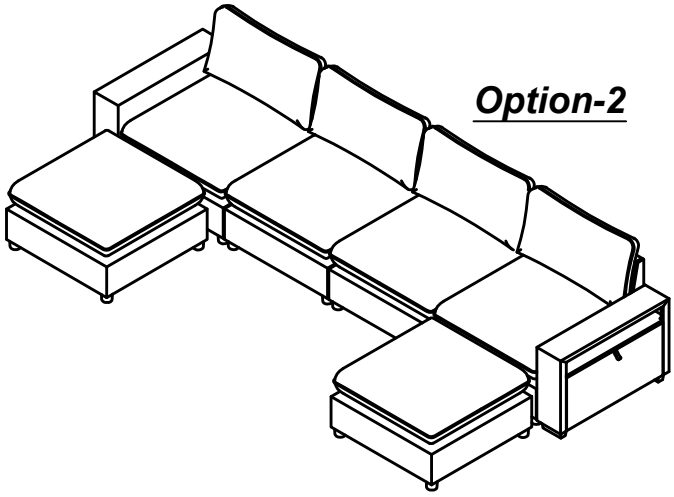

Option-3

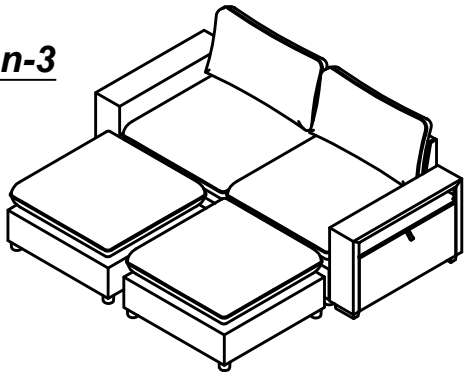

Option-4

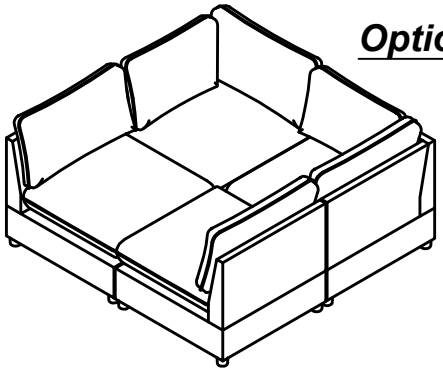

Option-5

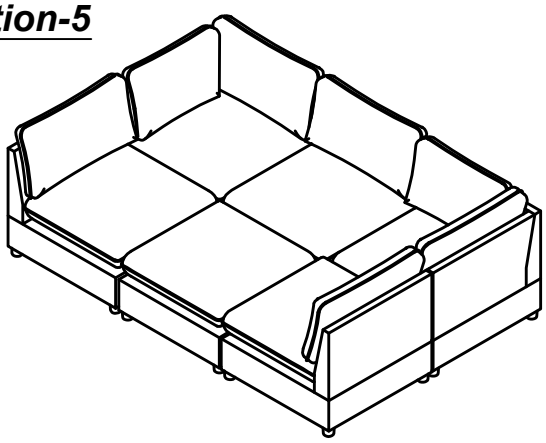

Option-6

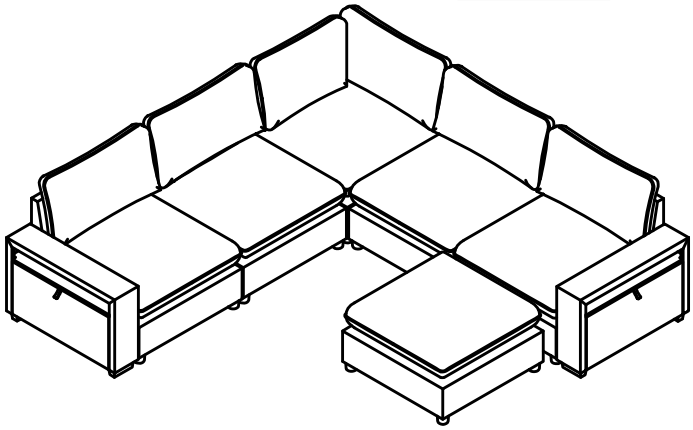

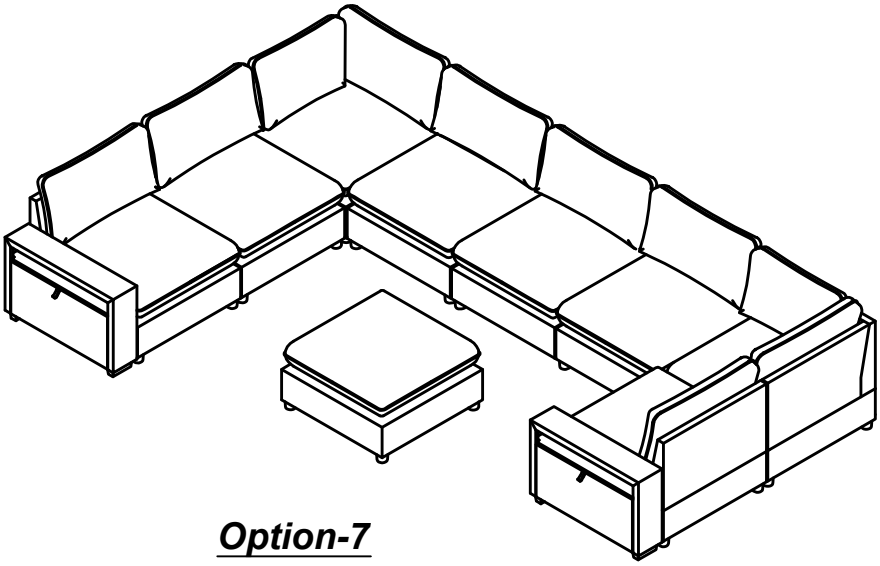

Option-7