ASSEMBLY INSTRUCTION

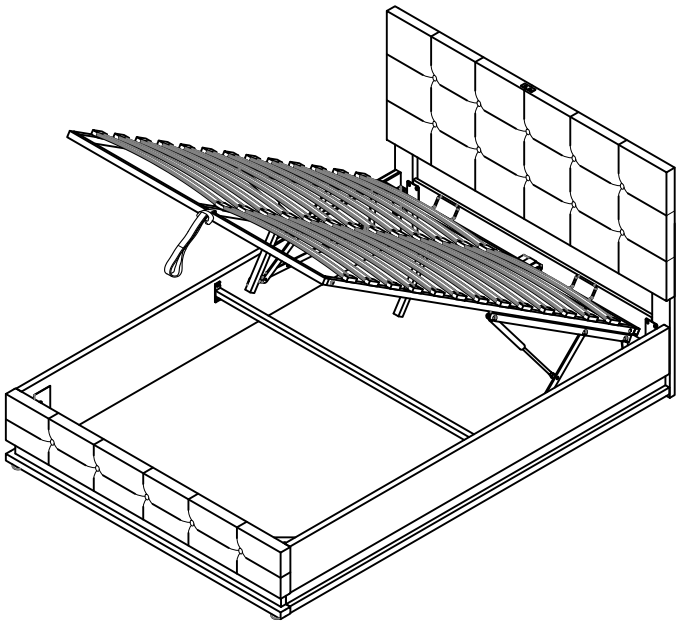

TIPS

1. Please read the instructions fully before assembly. These instructions include important information which could ensure correct assembly. We have been working on providing high quality products for you. However, in the rare instance that your product is defective, missing parts or there are some issues, please don't hesitate to contact our customer service to submit parts requirements, assembly suggestion, or warranty claims, and we will give the best solution as soon as possible. If necessary, we need you to provide some more clear pictures of the issue.
2. Insert the screws in holes and tighten the screws, but not too tight, 70%~80% is ok, finally tighten all the screws. If some issues happened that some screws can not target to the hole or some parts are difficult to install, please adjust the tightness of the screws.
3. 2 people are recommended to finish

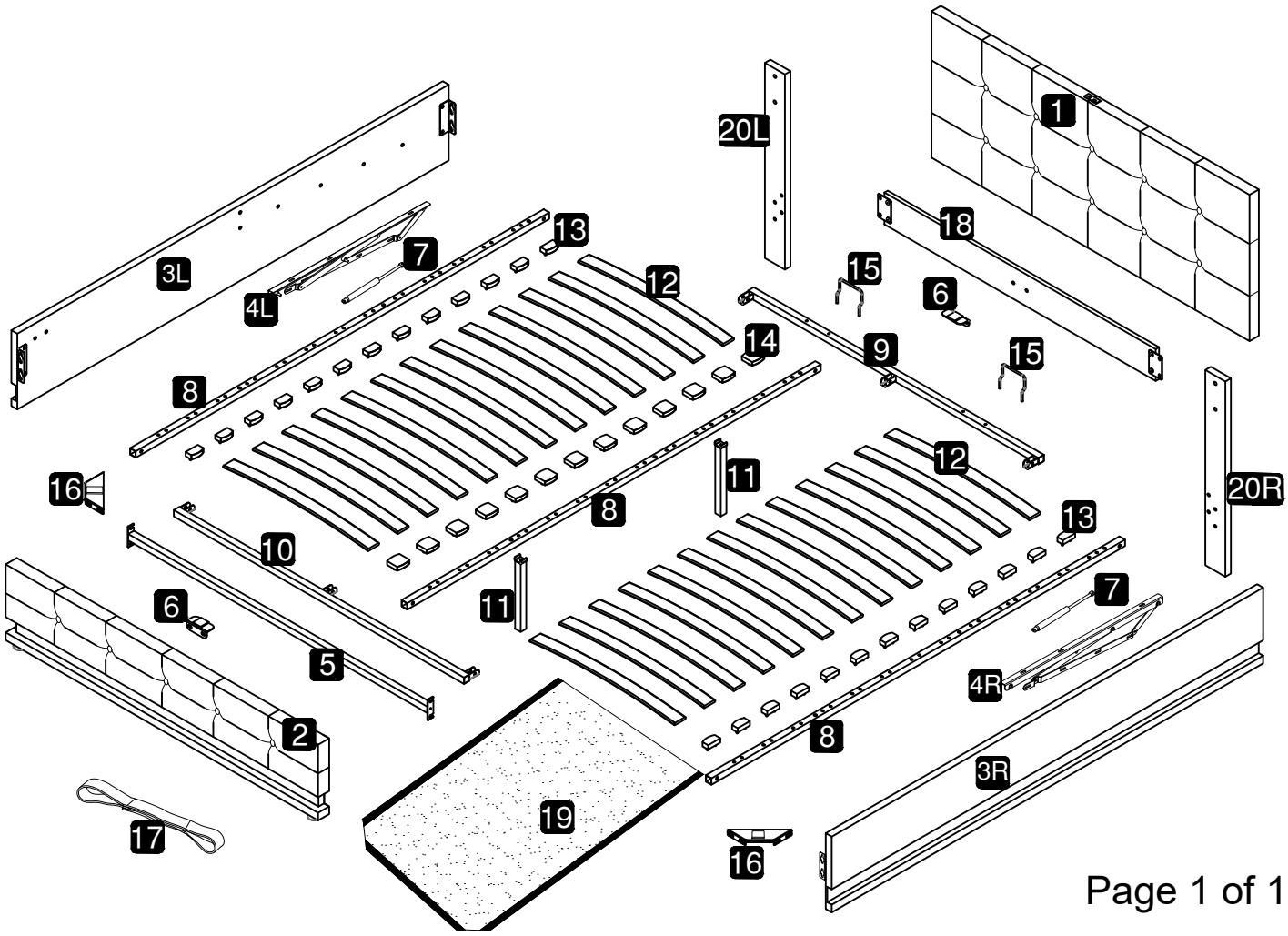

Part List

1 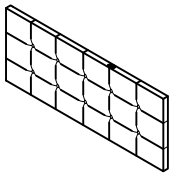 Headboard ×1	2 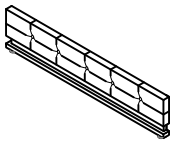 Footboard ×1	4L 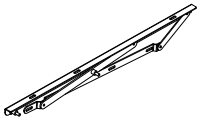 Lift Mechanism ×1	4R 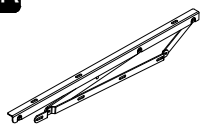 Lift Mechanism ×1
7 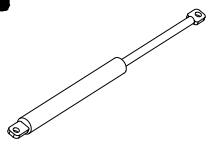 Gas Strut ×2	18 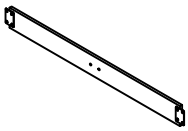 Head board leg Connecting plate ×1	20L Head board leg ×1	20R 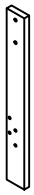 Head board leg ×1
M 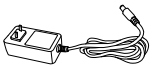 LED Power Transformer ×1	N 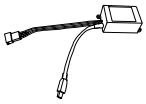 Controller ×1	O 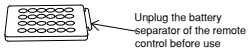 Remote Control ×1	P USB Power Transformer ×1

Part List

3L 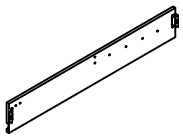 Side Rails ×1	3R Side Rails ×1	5 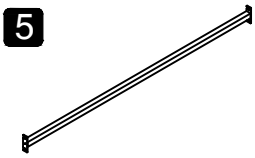 Reinforced Pipe ×1	6 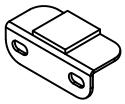 Angle Iron ×2
8 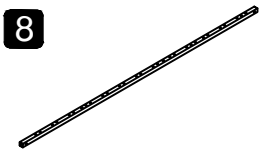 Side Rails for Metal Slat Frame ×3	9 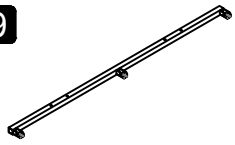 Cross Rail for Metal Slat Frame - Headend ×1	10 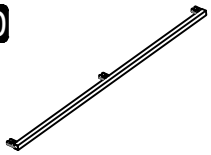 Cross Rail for Metal Slat Frame - Footend ×1	11 Centre Support Leg ×2
12 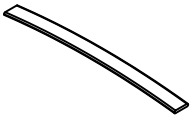 Slats Full×24 Queen×26	13 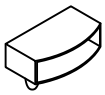 Plastic Slat Caps Full×24 Queen×26	14 Centre Slat Caps Full×12 Queen×13	15 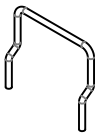 Mattress Stopper ×2
16 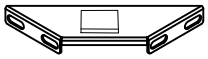 Metal Corner Bracket×2	17 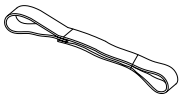 Rope ×1	19 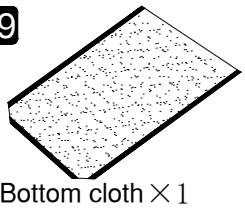 Bottom cloth ×1	

Hardware List

A Bolts(M8x18mm) ×4	B 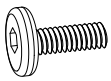 Bolts(M8x20mm)×24	C Bolts(M8x30mm) ×8	D 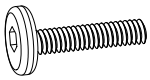 Bolts(M8x40mm) ×12
E Bolts(M8x50mm)×4	F Bolts(M6x35mm)×2	G Spanner ×1	H Non-slip nuts （M8）×16
J 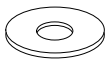 Flat Washer ×12	K Allen Key ×1	L Plastic washer ×8	

IMPORTANT NOTICE

OTTOMAN OPERATING INSTRUCTIONS

Once your bed frame is completely assembled, the slat unit will not operate correctly unless a mattress is placed on the slat frame. Position the mattress on the slat frame whilst it is in the closed position.

PLEASE NOTE - It takes a lot of force to make the initial movement of the ottoman. This is a design feature of the product so that it does not fall shut - the nearer to being closed the ottoman is, the easier it is to move. When the ottoman is al most shut, it will close completely under its own weight.

When lowering the slat unit for the first time, take care to make sure it does not rub unevenly on the inside face of the side rails. If it does, the bed has been assembled slightly out of square. This can be rectified by moving the foot end of the bed slightly to the left or right whilst leaving the head end stationary.

PISTONS

The pistons used in the construction of this product are extremely strong and cannot be operated by hand when taken off the ottoman. All pistons are tested for correct pressure and operation before being attached to the slat unit.

Initially it might appear that the pistons are very stiff when opening and closing the ottoman.

THIS IS PERFECTLY NORMAL

When fully assembled and the mattress is in position, please raise and lower the ottoman 4/5 times to ensure the gas piston are fully lubricated.

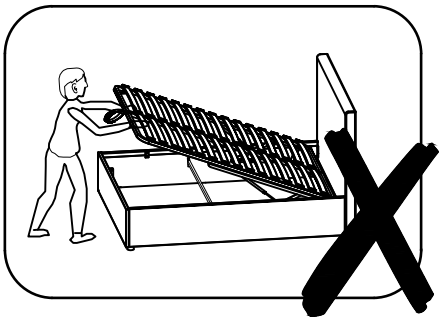

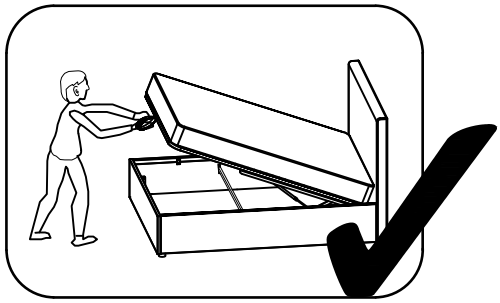

Attention: Do not tighten the screws before completing the entire installation.If you have any difficulty with the installation process, please feel free to contact us.

Step 1:

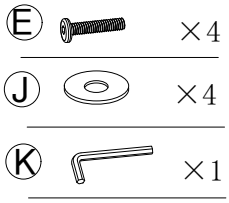

Fix the Headboard legs(20L) / (20R) To the headboard(1) With Bolts (E) and Flat Washer (J) by using Allen key (K),you can chose the holes a and b or b and c .

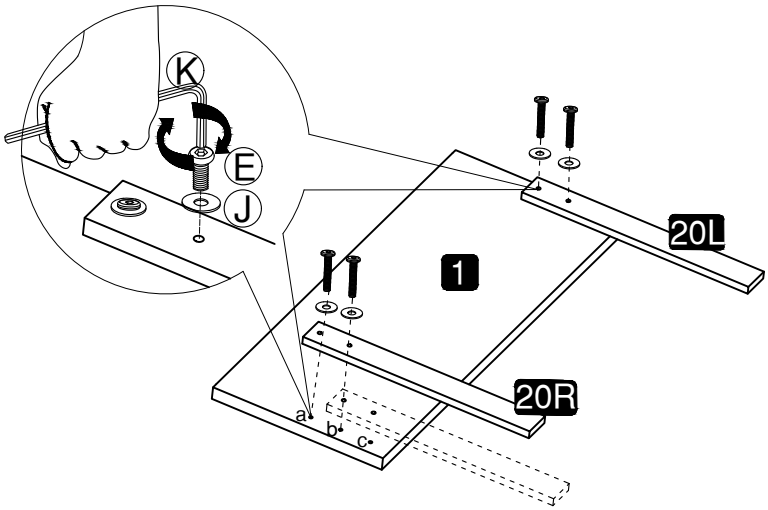

Step 2:

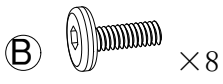

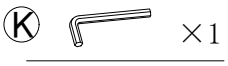

Fix the leg connecting plate (18) to the head plate leg (20L)/(20R) with hexagon wrench (K) bolt (B).

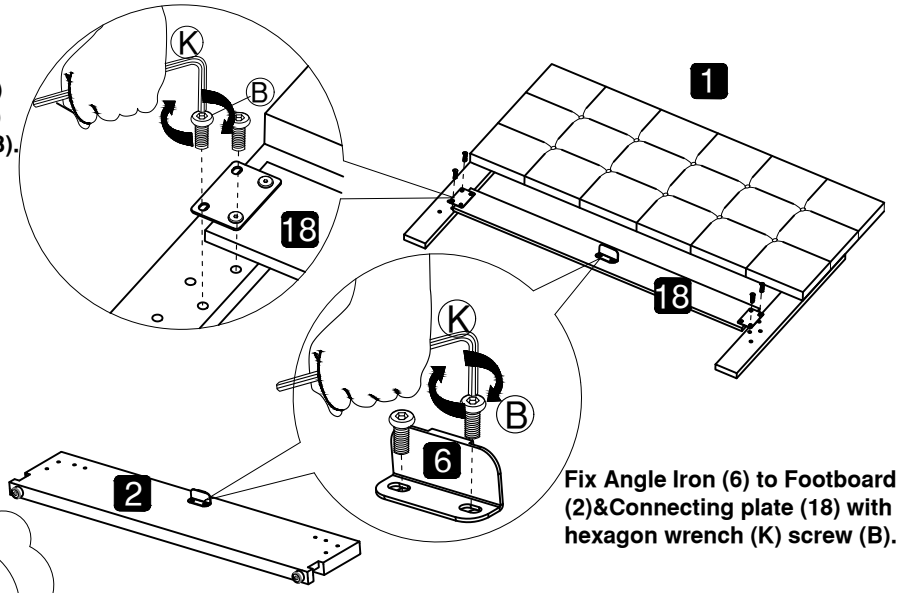

Fix Angle Iron (6) to Footboard (2)&Connecting plate (18) with hexagon wrench (K) screw (B).

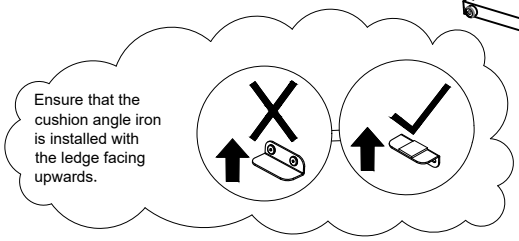

Step 3:

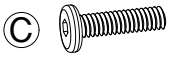

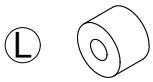

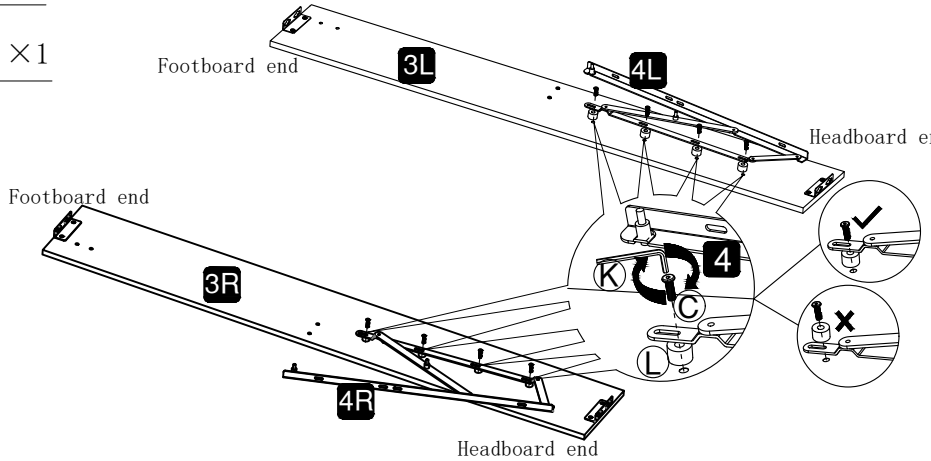

Use an Allen wrench (K) to connect the hinge (4) to the side beams (3L) and (3R) at the headboard end with M8 bolts (C) and plastic washers (L).

Step 4:

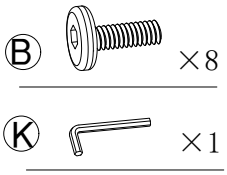

Fix the Side Rails (3L)&(3R) to the Head board leg (20L)/(20R) and Footboard (2) with a hex wrench (K) and bolts (B).

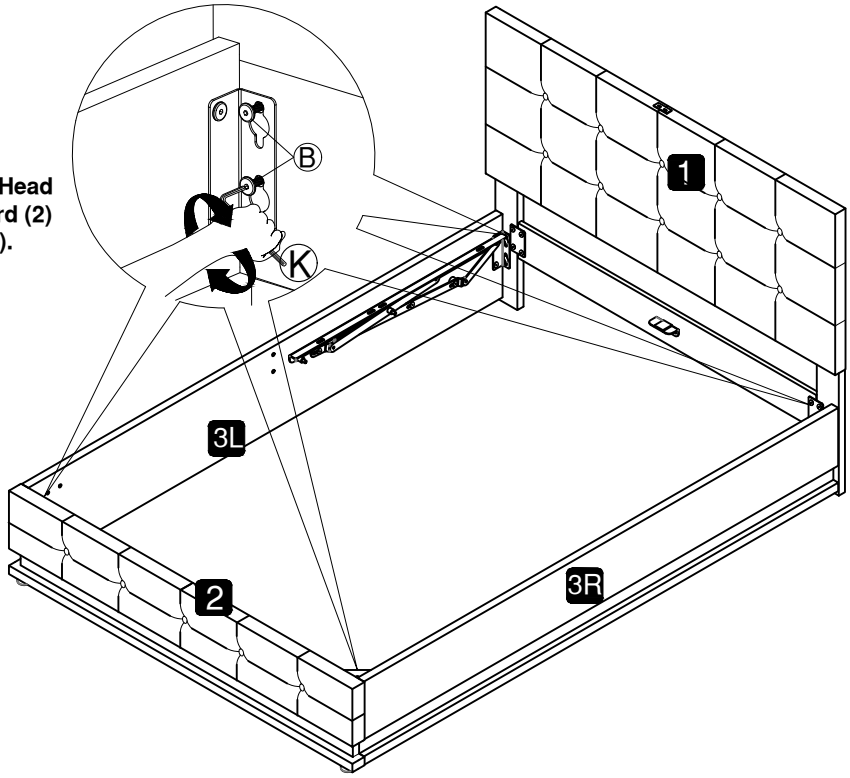

Step 5:

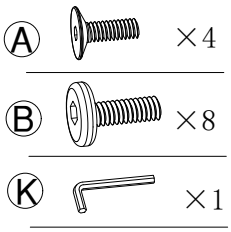

Use a hex wrench (K) to connect the Reinforced Pipe (5) to the side member with bolts (A).

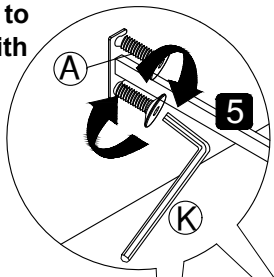

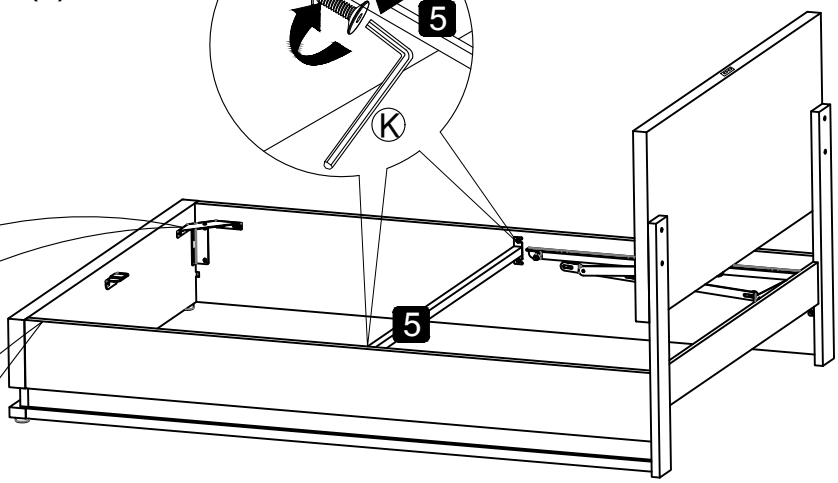

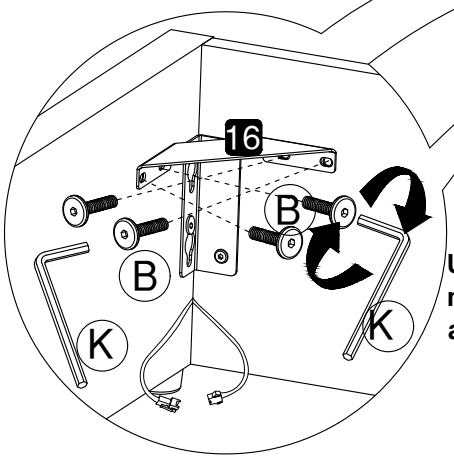

Use a hex wrench (K) to fix the metal bracket (16) to the Side Rails and Footboard with bolts (B).

Step 6:

Stick the black non-woven fabric (19)To the bottom of bed

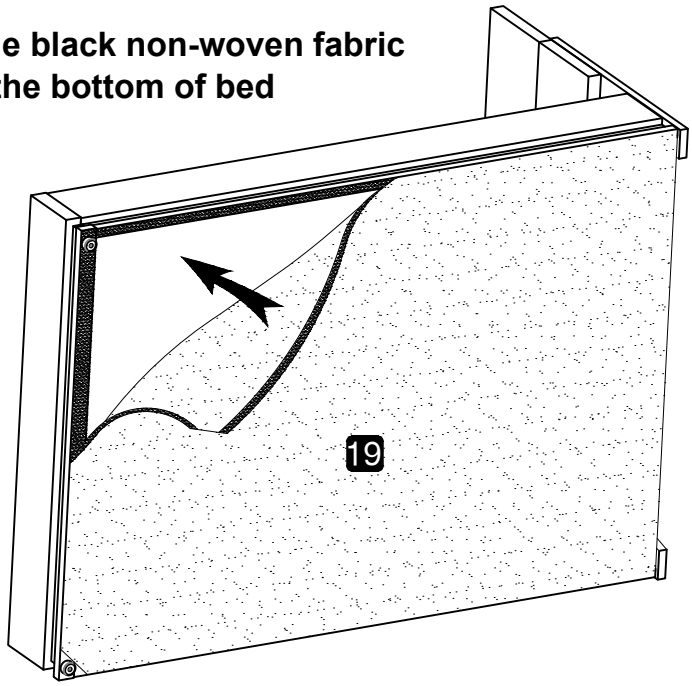

Step 7:

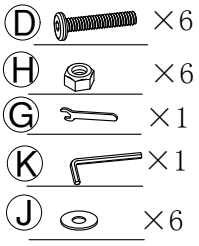

Bottom view, when connecting 8 and 9, make sure that the holes in the dashed boxes are aligned.

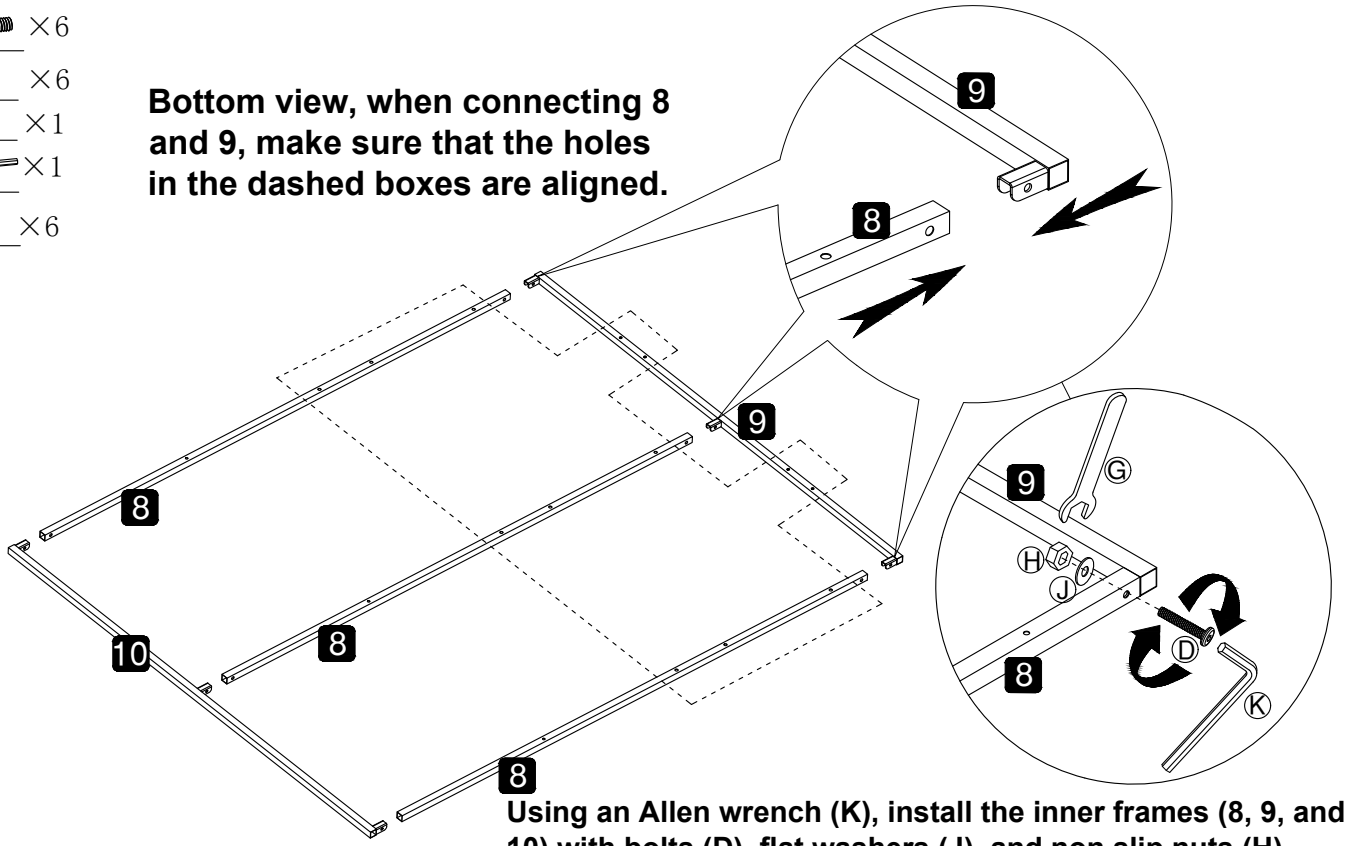

Using an Allen wrench (K), install the inner frames (8, 9, and 10) with bolts (D), flat washers (J), and non slip nuts (H).

Step 8:

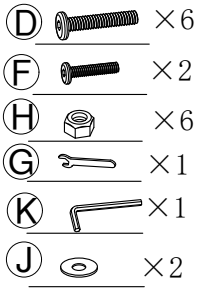

Use an Allen wrench (K) to connect the center leg (11) to the center pipe (8) with M6 bolts (F) and flat washers (J).

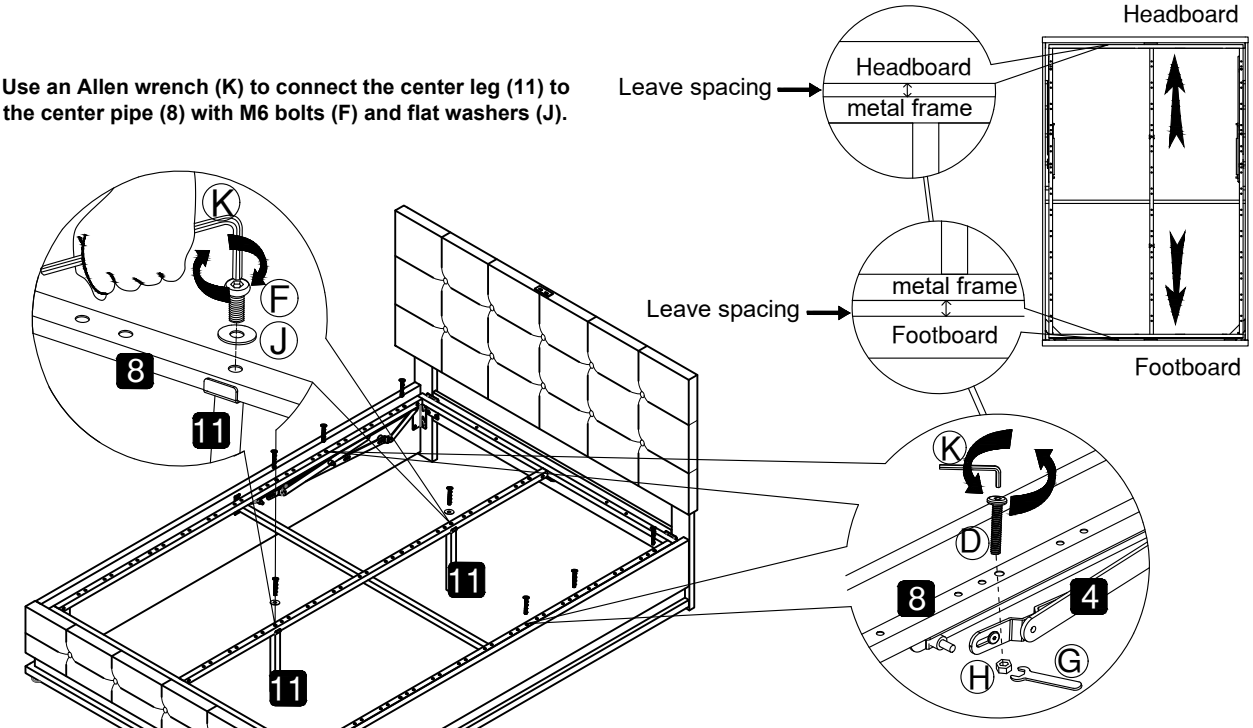

First, use bolts (D) and nuts (H) to connect the side tube (8) to the hinge (4). At this stage, do not fully tighten the bolts (D) to allow for some adjustment between the headboard, pedals and the metal frame. After aligning each part of headboard, pedal and metal frame, fully tighten all bolts (D).

Step 9:

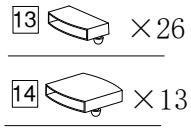

Attach the plastic slat caps (13) to each slat (12) at the side Then press down the hole corresponding to the side pipe (8).

Insert the Mattress Stopper (15) into the hole corresponding to Cross Rail for Metal Slat Frame (9).

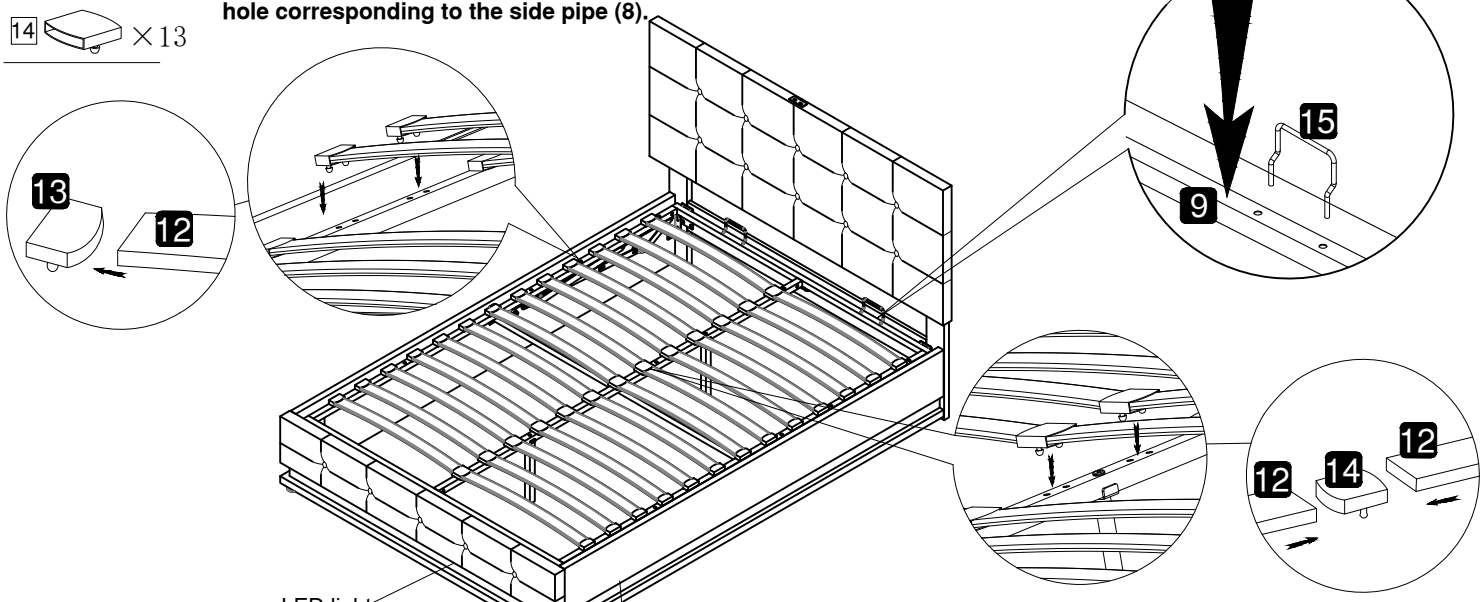

Attach the centre slat caps (14) between two slats (12) at the centre Then press down the hole corresponding to the side pipe (8).

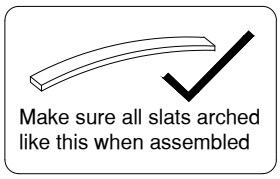

Step 10:

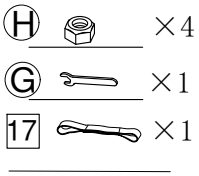

Attach the gas struts (7) to the hinge (4) with M8 nuts (H)as shown.

As shown in the figure, tie the rope (17) to the Cross Rail for Metal Slat Frame - Footend On the internal frame.

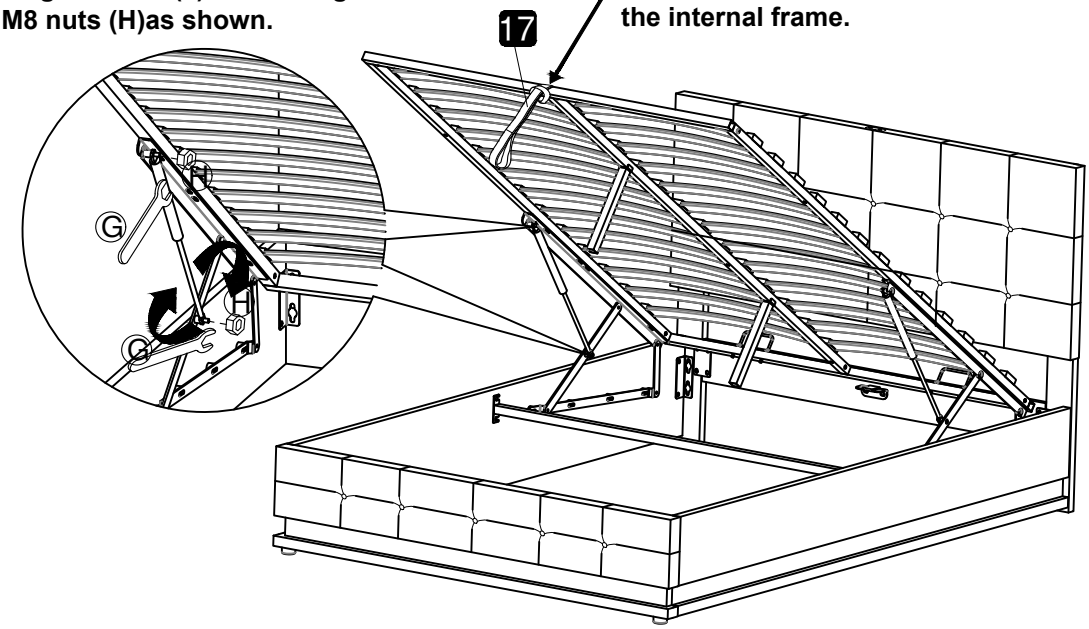

Step 11:

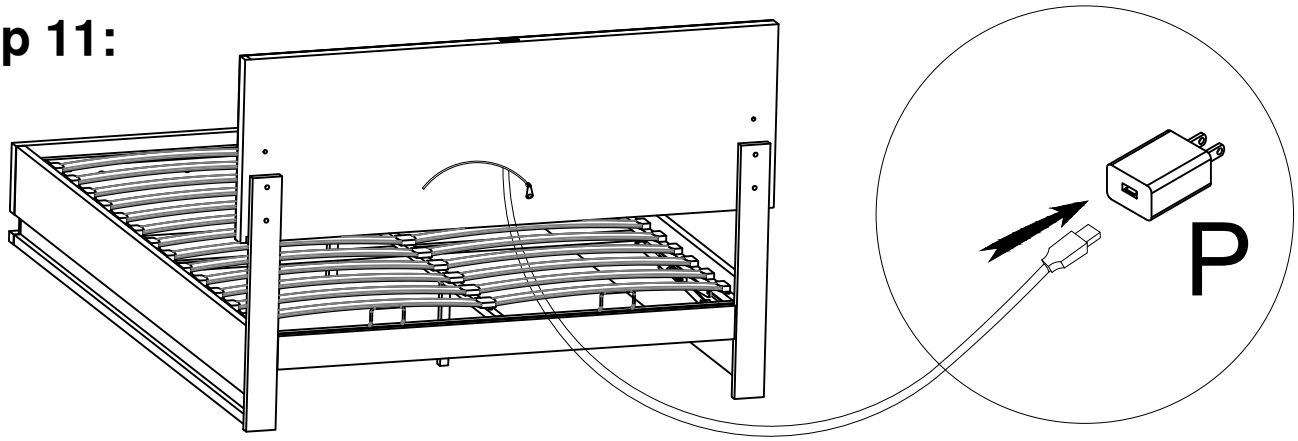

Open the zipper, take out the USB cable, and insert it into the power transformer.

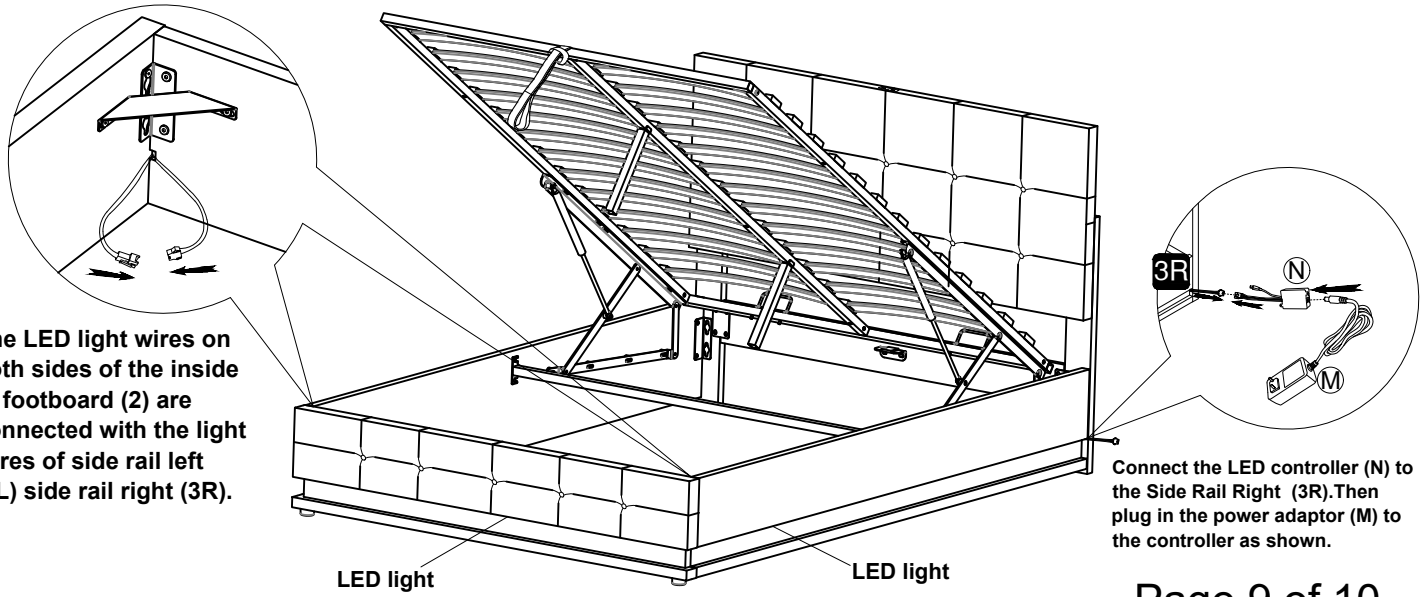

The LED light wires on both sides of the inside of footboard (2) are connected with the light wires of side rail left (3L) side rail right (3R).

Connect the LED controller (N) to the Side Rail Right (3R).Then plug in the power adaptor (M) to the controller as shown.

LED light

If you can't let the lights work successfully,please check the following:

1.Please check the direction of the connect,try it in the opposite direction,according to the following picture.
2.Please check the remote control,it need you to tear down the plastic septum before use it.
3.If one of the colors is not bright, please check whether the four wires in the plug are skewed, and move the main line to make the four wires flush.

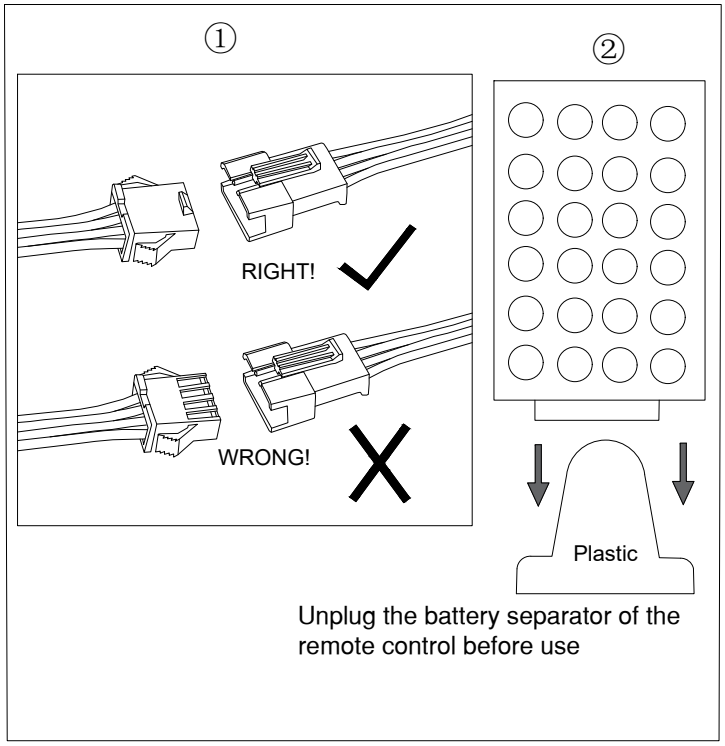

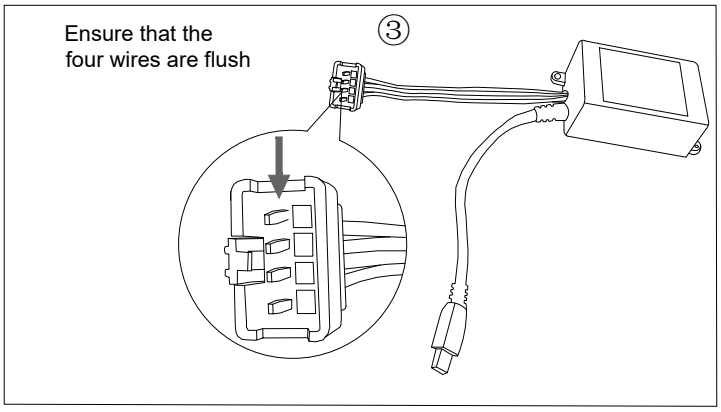

1. Please check the direction of the arrow
2. Please pull the plastic block out of the remote control
3. Please check whether the four wires of the plug are neat

⚠ WARNING

THIS PRODUCT CONTAINS A BUTTON BATTERY
If swallowed, a lithium button battery can cause severe or fatal injuries within 2 hours.
Keep batteries out of reach of children.
If you think batteries may have been swallowed or placed inside any part of the body, seek immediate medical attention.