ASSEMBLY INSTRUCTIONS

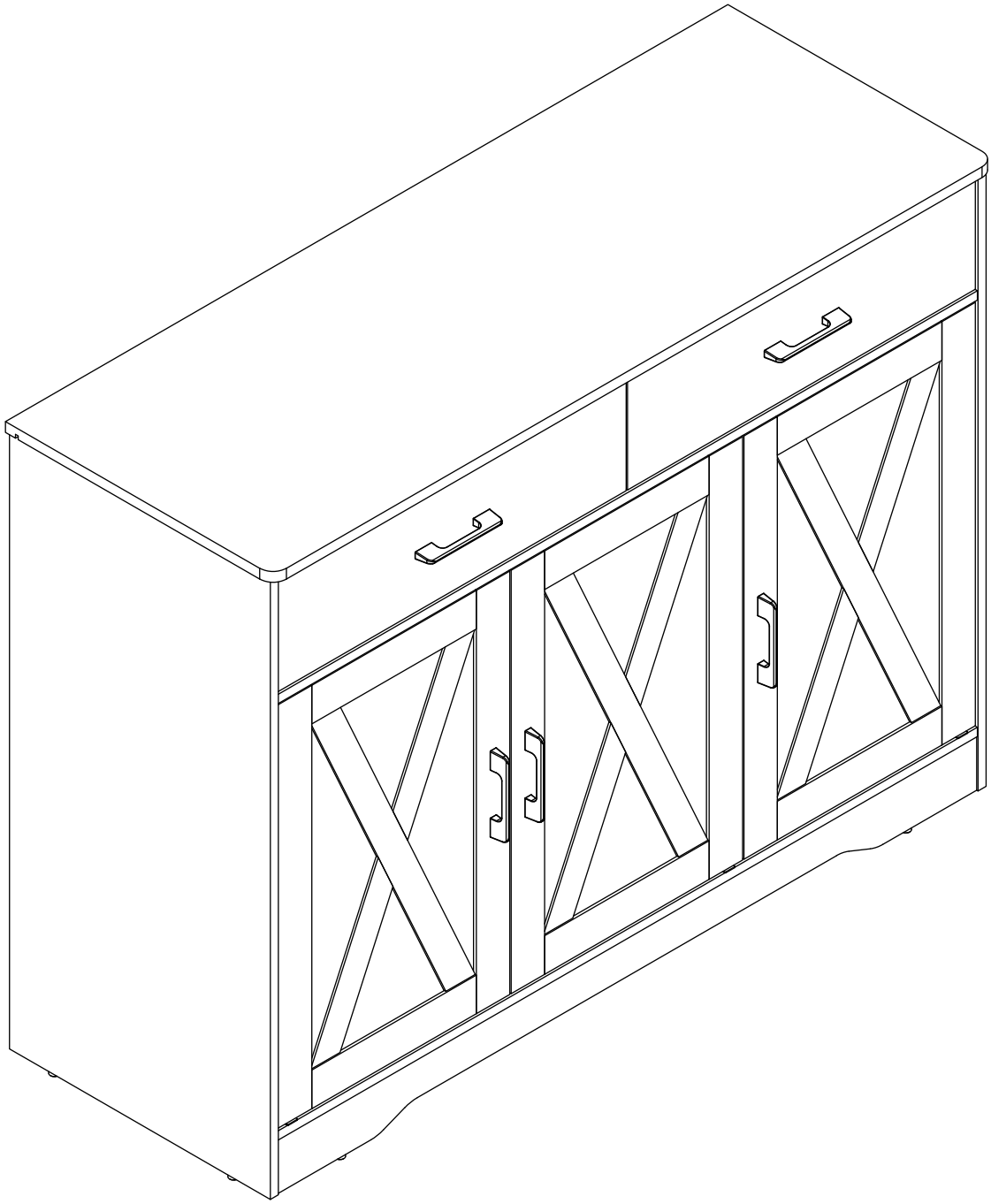

WARNING !

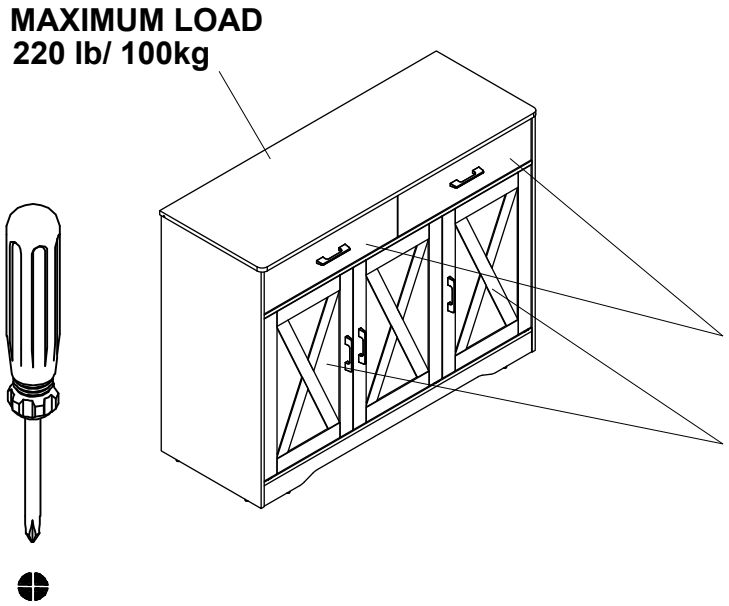



Estimated Time for Assembly

60 mins

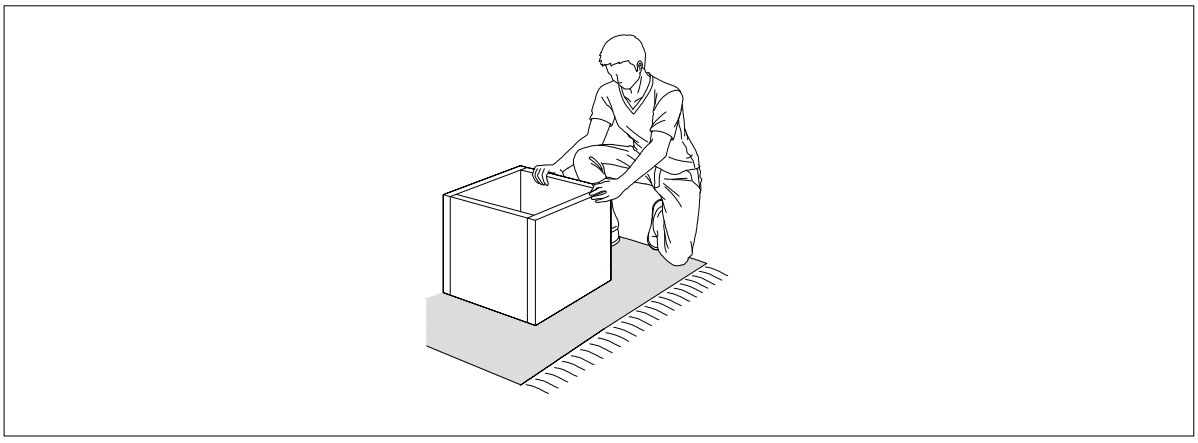

Assembly the furniture on empty carton, carpet, or rug to prevent scratches or damage.

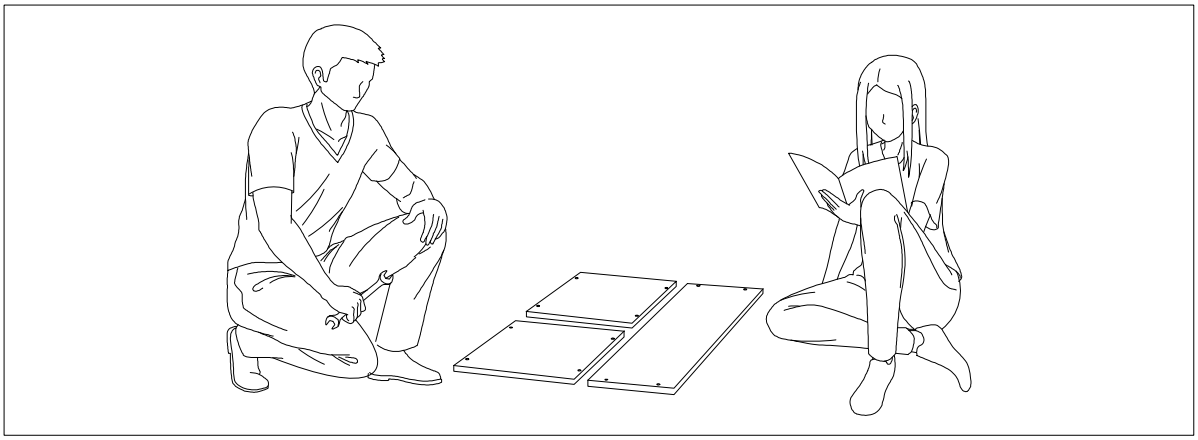

This furniture requires 2 people to assembly.

Make sure no parts are missing or damaged before assembly.

Board Identification

Not actual size

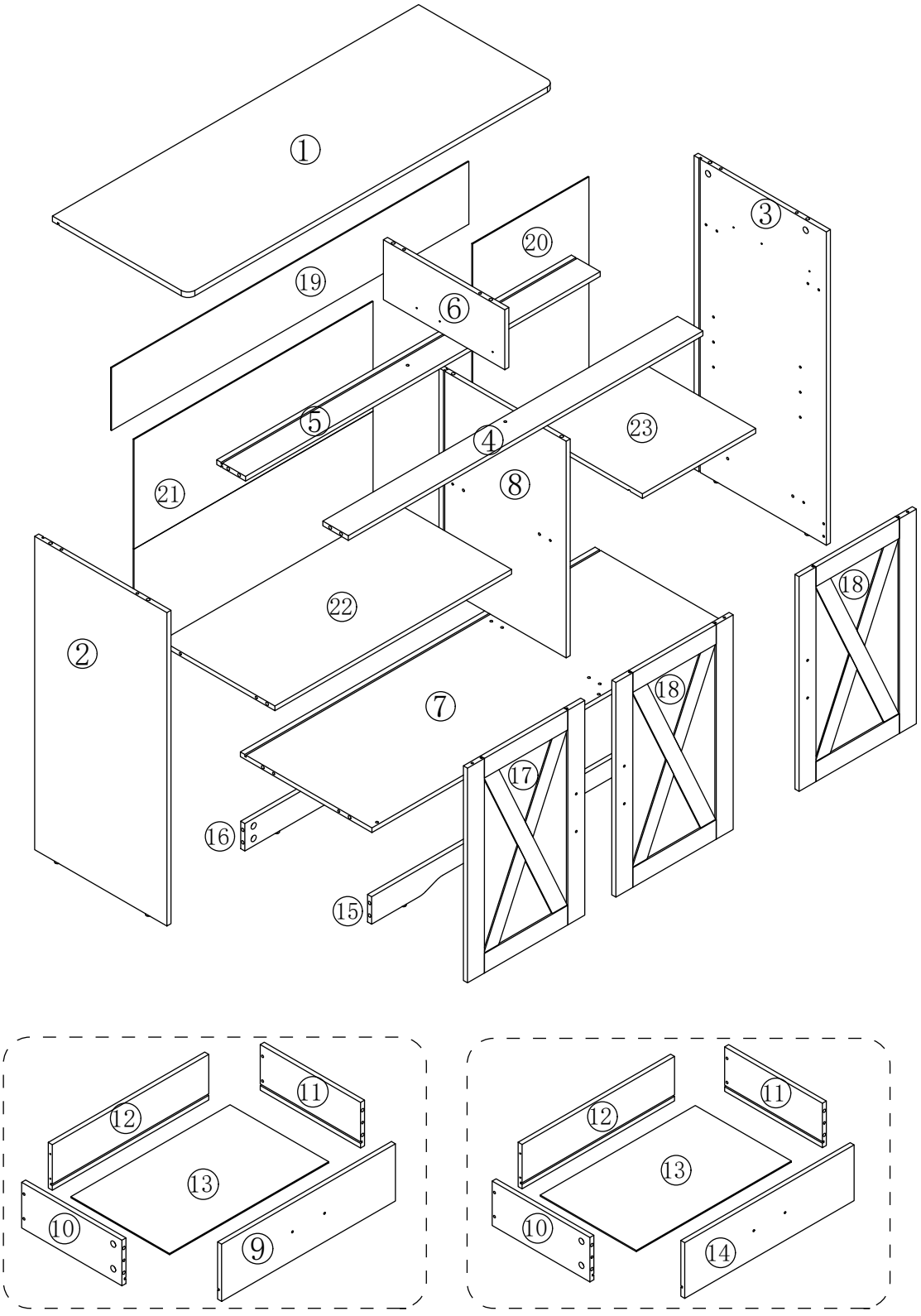

BOARD IDENTIFICATION

Not actual size

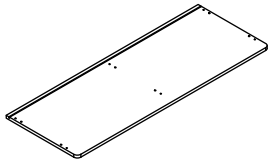

1 x1

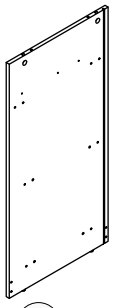

2 x1

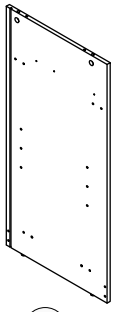

3 x1

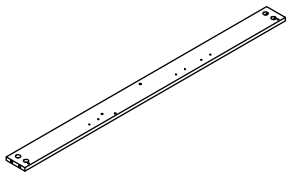

4 x1

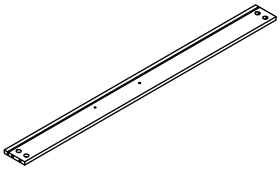

5 x1

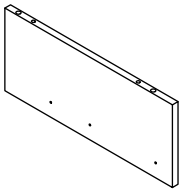

6 x1

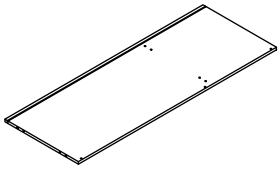

7 x1

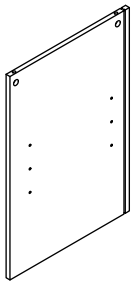

8 x1

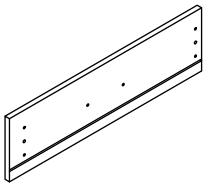

9 x1

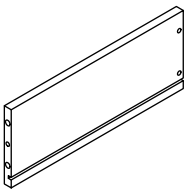

10 x2

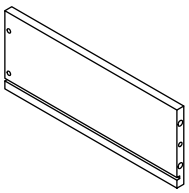

11 x2

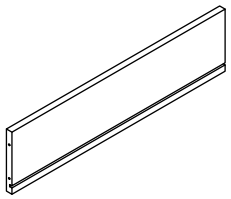

12 x2

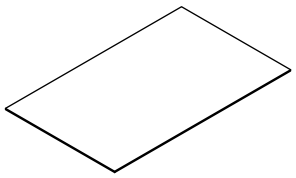

13 x2

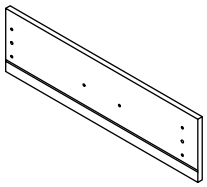

14 x1

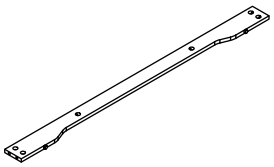

15 x1

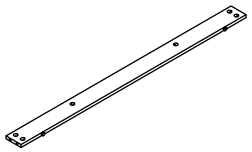

16 x1

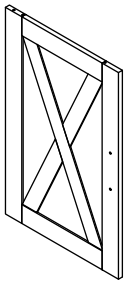

17 x1

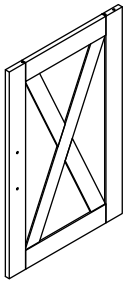

18 x2

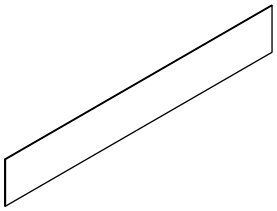

19 x1

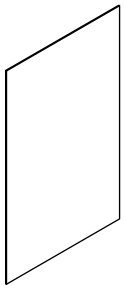

20 x1

BOARD IDENTIFICATION

Not actual size

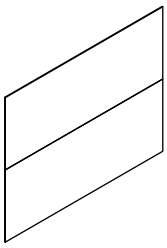

21 x1

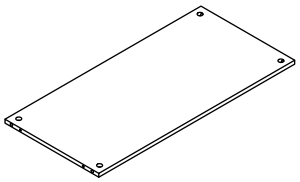

22 x1

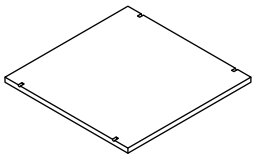

23 x1

Cam Lock Fastening System

Insert the cam bolt into the hole first, then insert the cam lock and lock it.

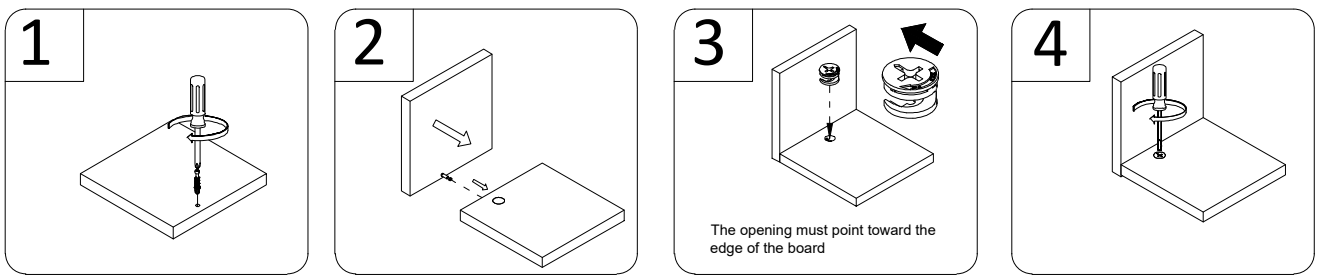

HARDWARE LIST



Ø5*40mm

A	x4+1

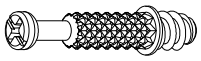

Ø6*33.5mm

B	x44+2



Ø15*9.5mm

C	x44+2



Ø6*40mm

D	x24+2



Ø3.5*12mm

E	x26+2



Ø3*14mm

F	x17+1

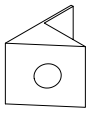

G	x11+1

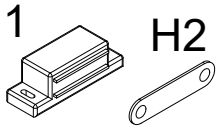

H	x3+1

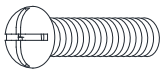

Ø4*16mm

I	x10+1

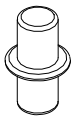

J	x7

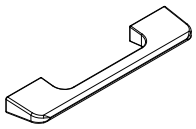

K	x5

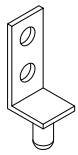

L	x3

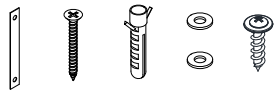

M	x2



N	x10

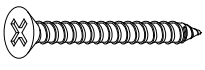

Ø4*35mm

O	x8+1



Ø3*10mm

P	x6+1

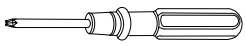

Q	x1

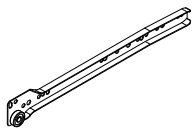

CL	x2

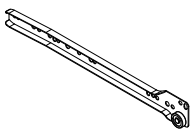

CR	x2

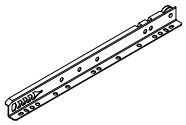

DL	x2

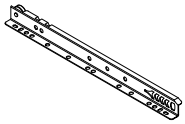

DR	x2

STEP 1

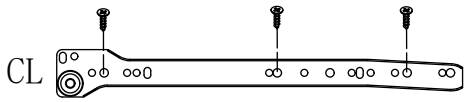

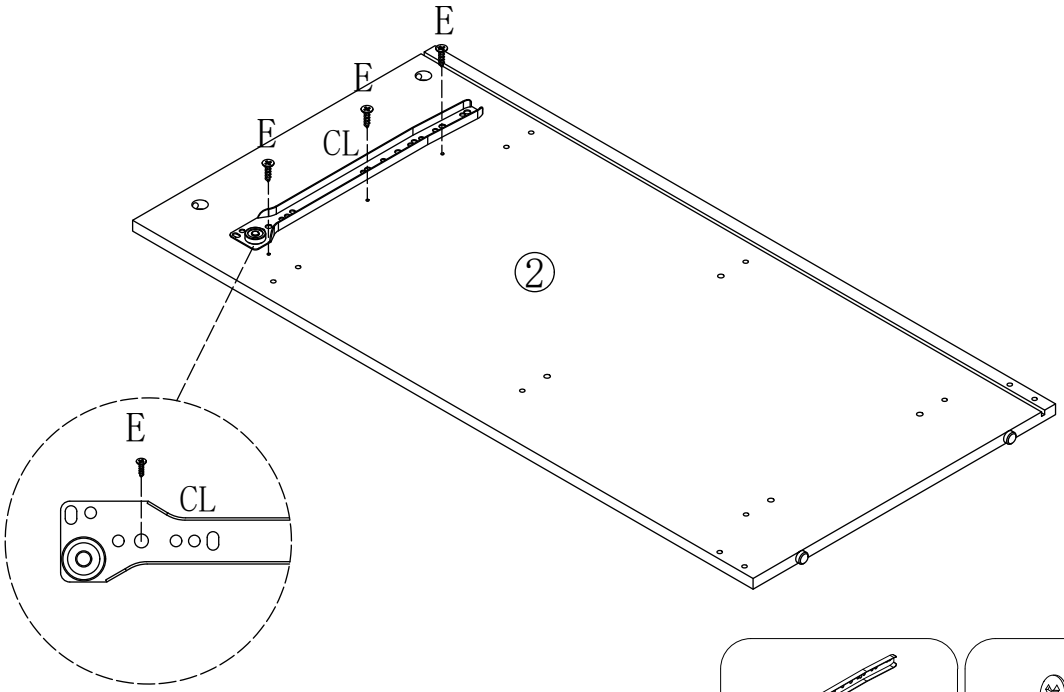

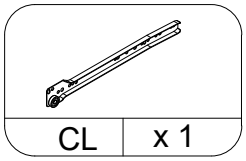

CL	x 1

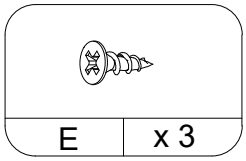

E	x 3

STEP 2

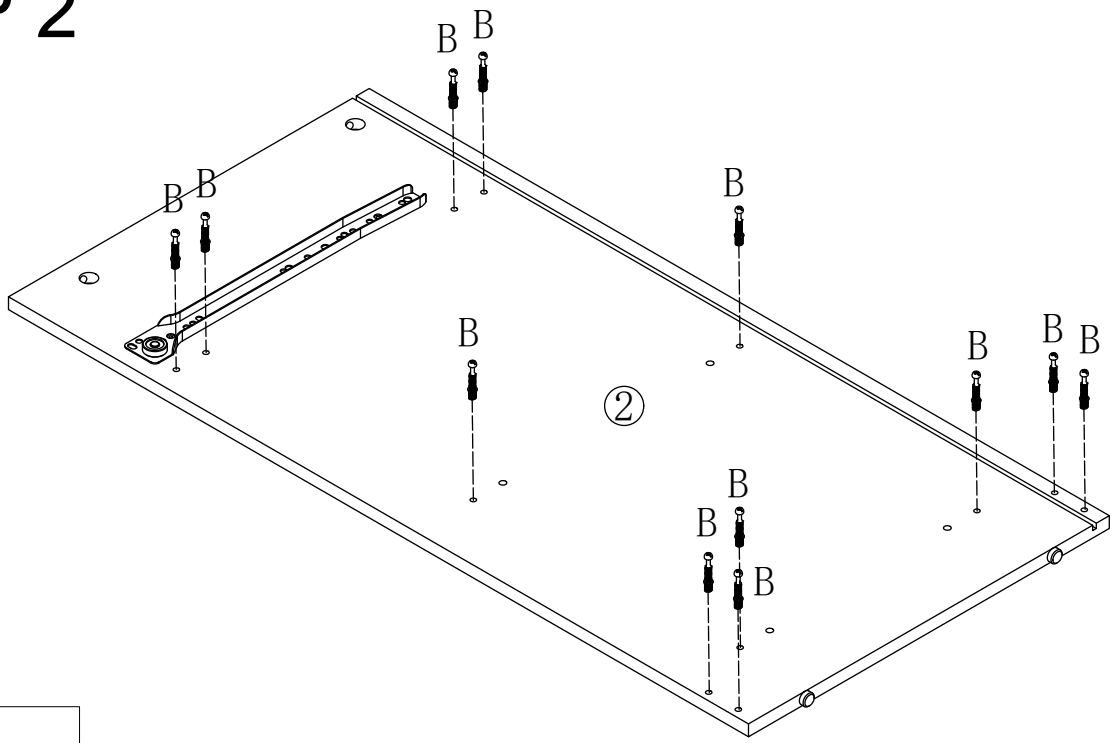

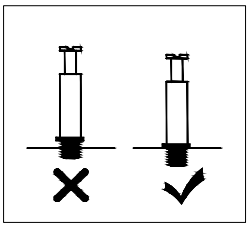

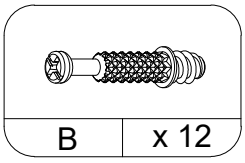

B	x 12

STEP 3

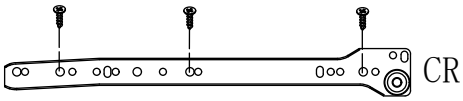

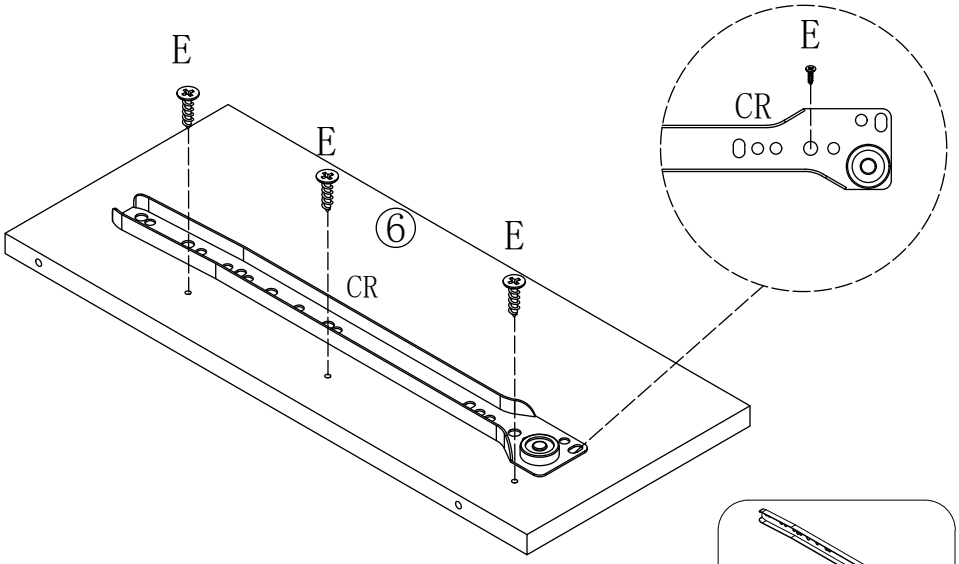

CR	x 1

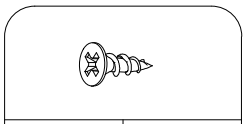

E	x 3

STEP 4

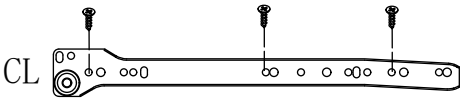

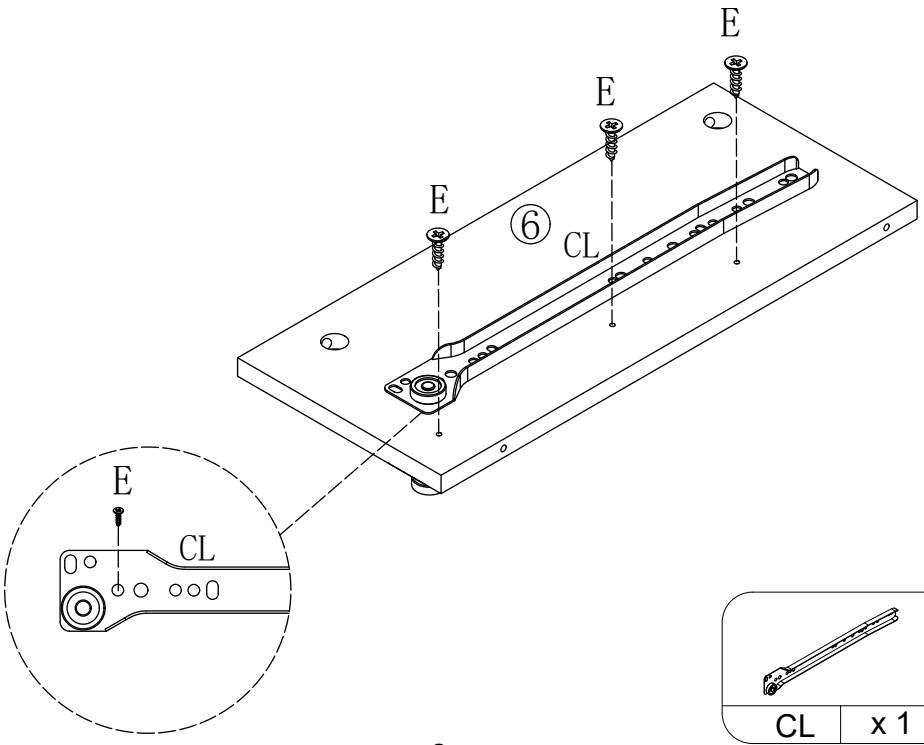

CL	x 1

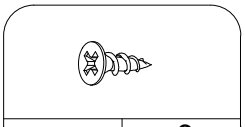

E	x 3

STEP 5

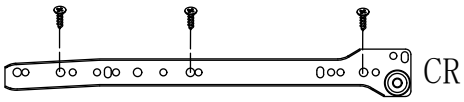

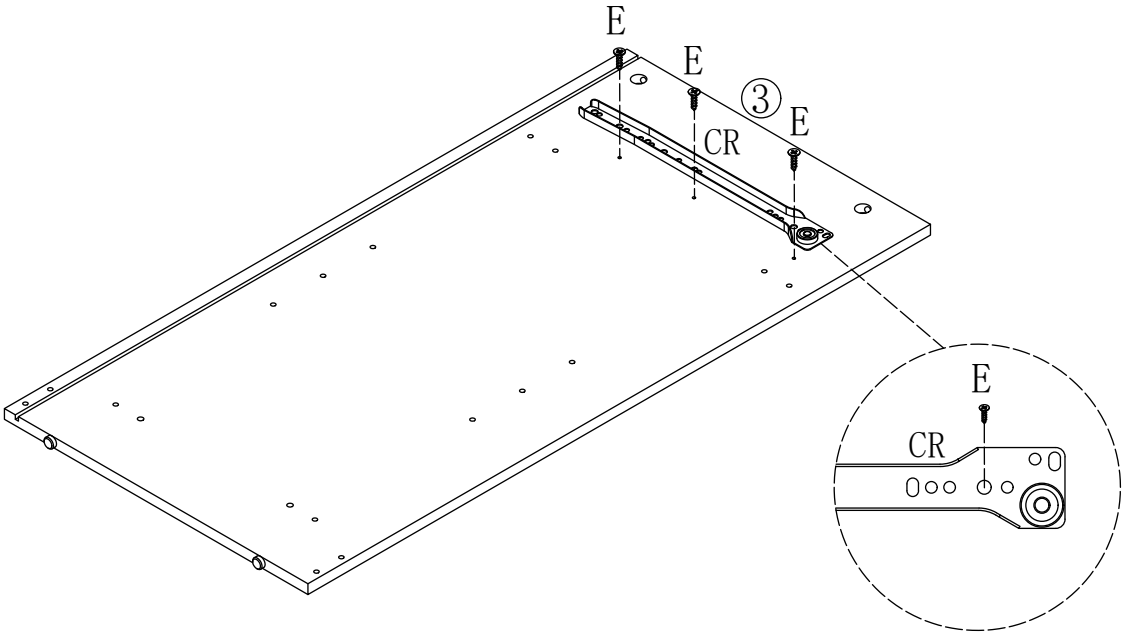

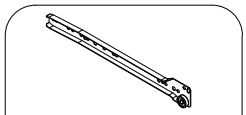

CR	x 1

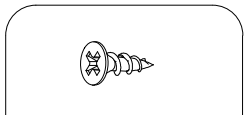

E	x 3

STEP 6

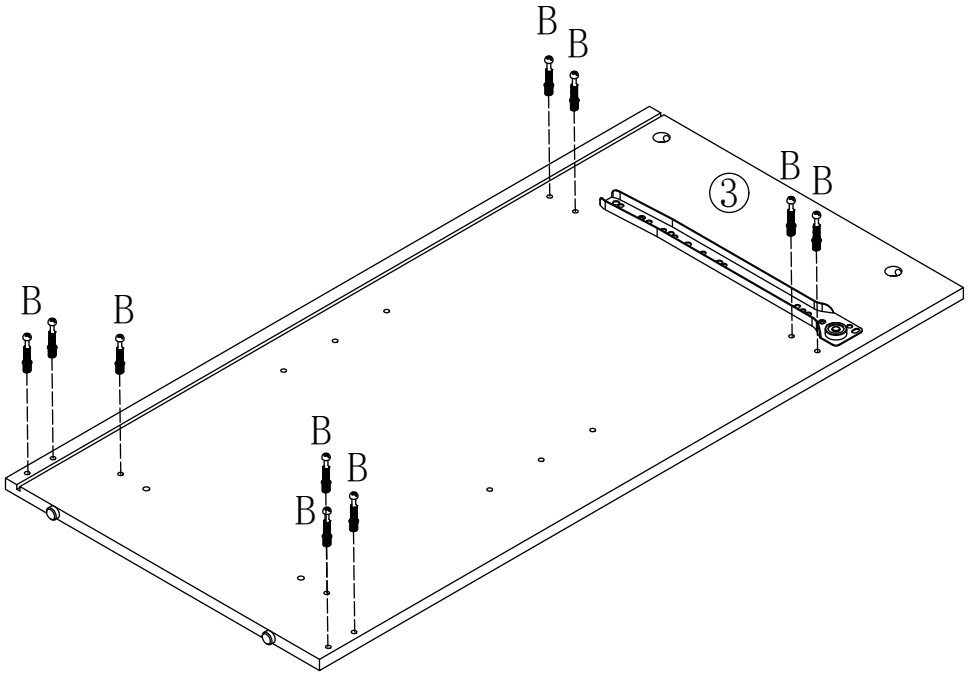

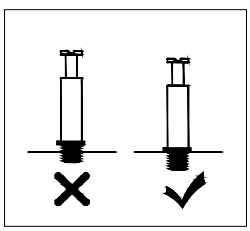

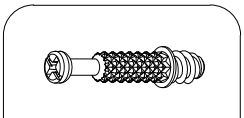

B	x 10

STEP 7

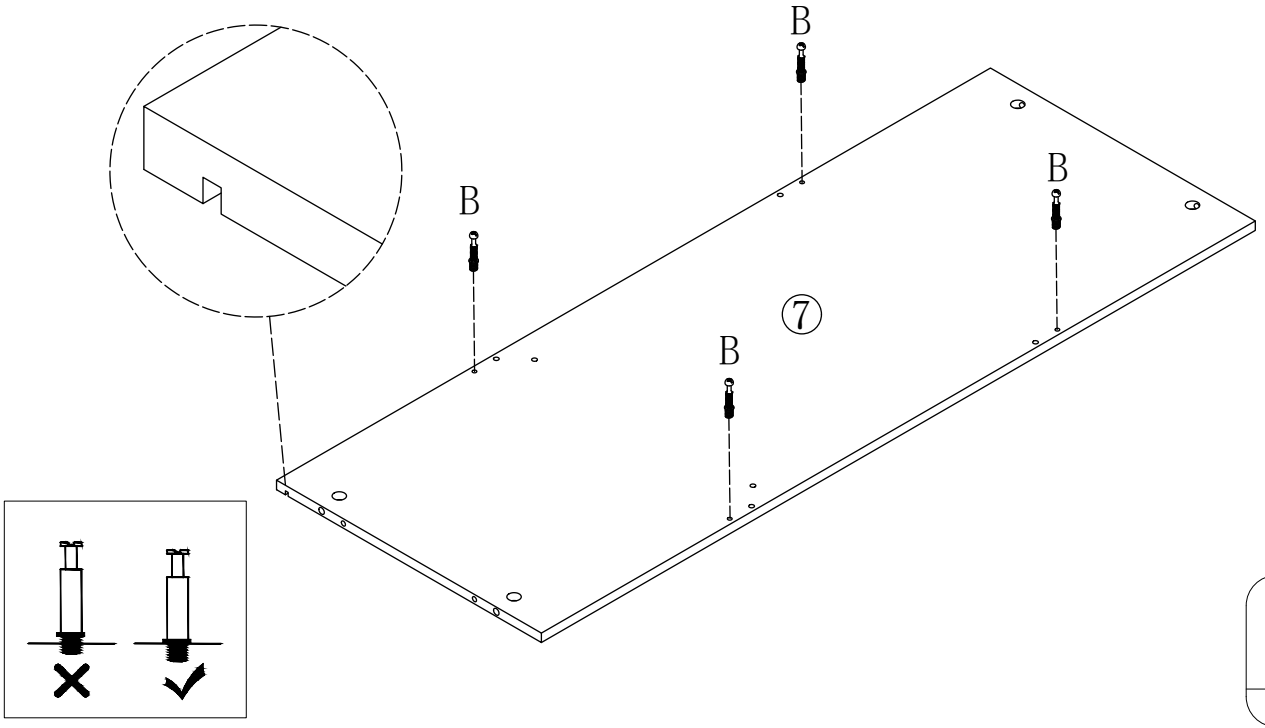

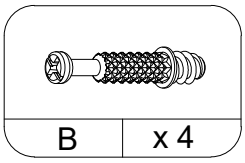

STEP 8

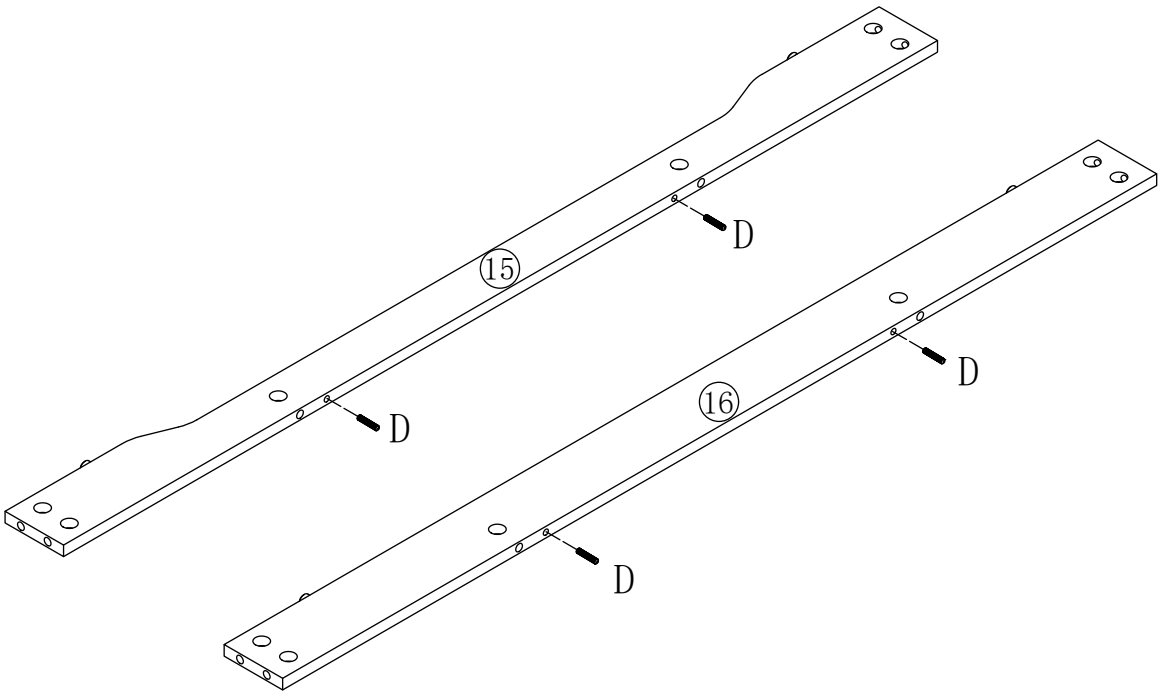

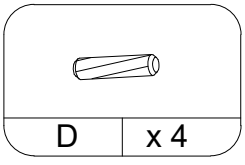

STEP 9

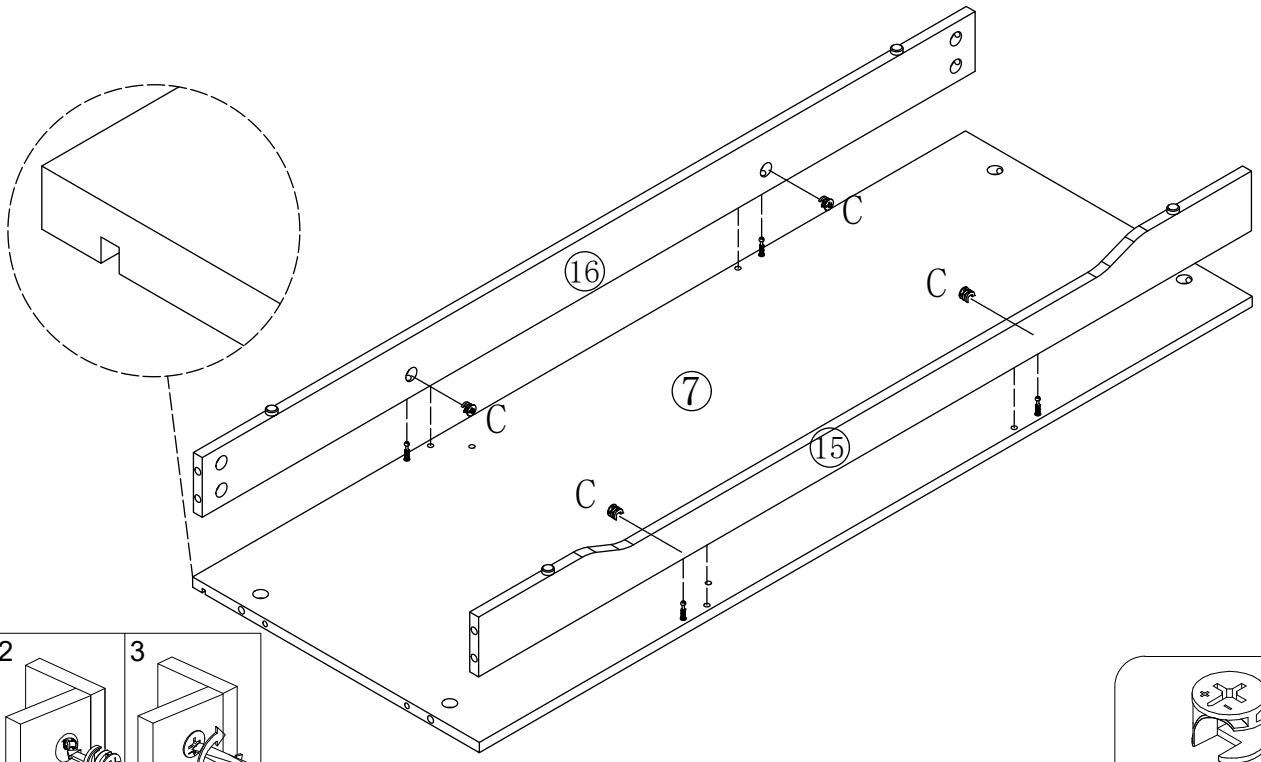

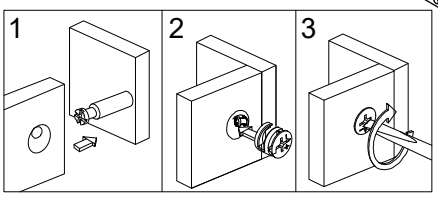

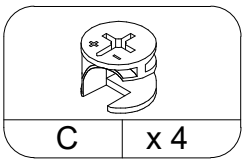

STEP 10

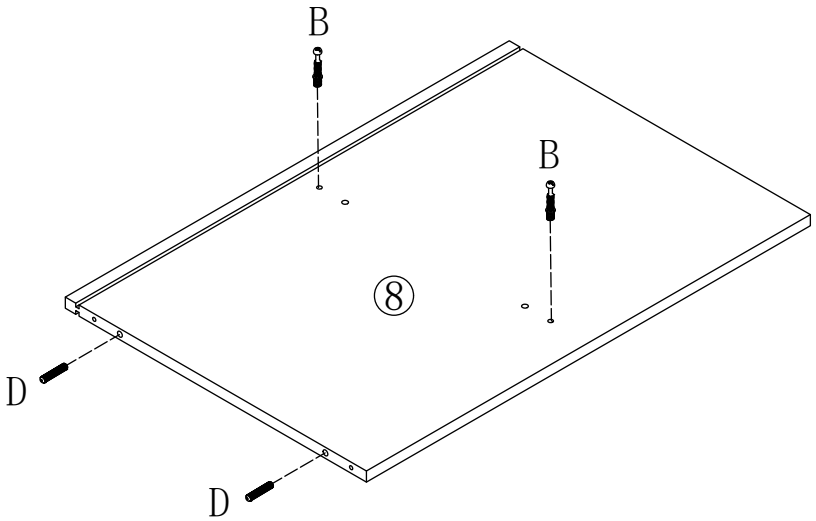

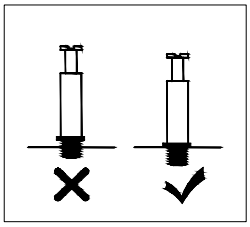

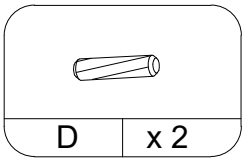

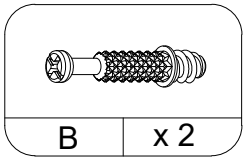

STEP 11

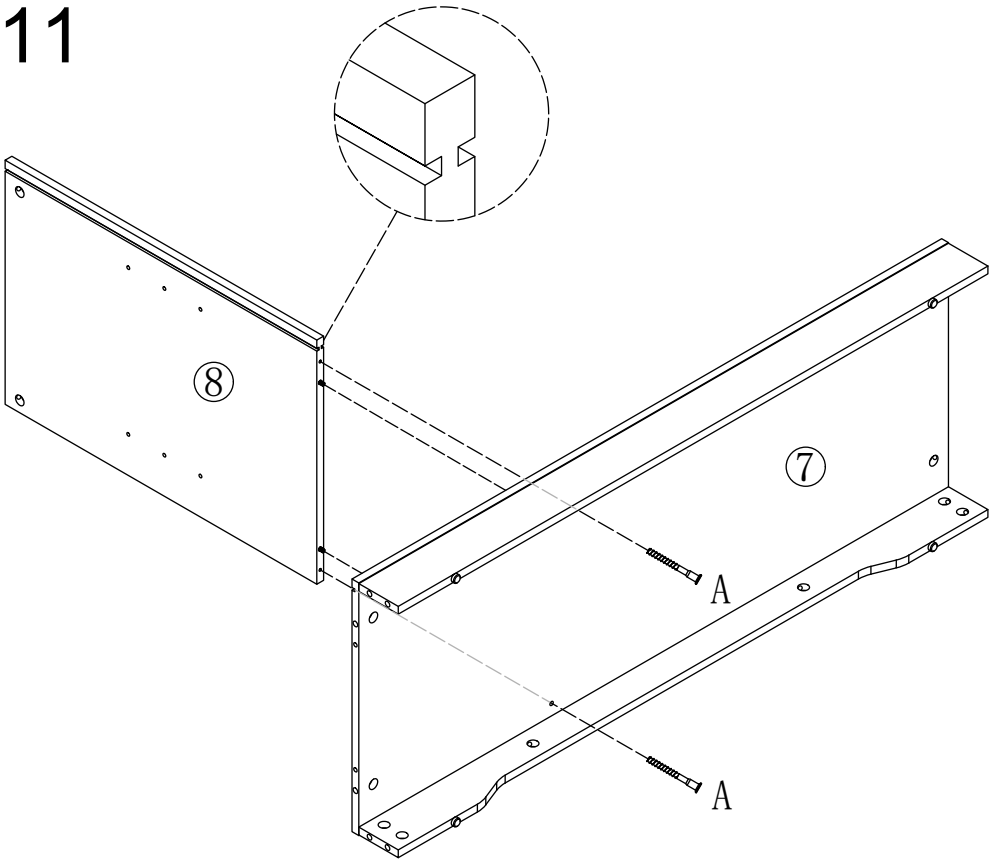

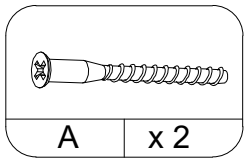

STEP 12

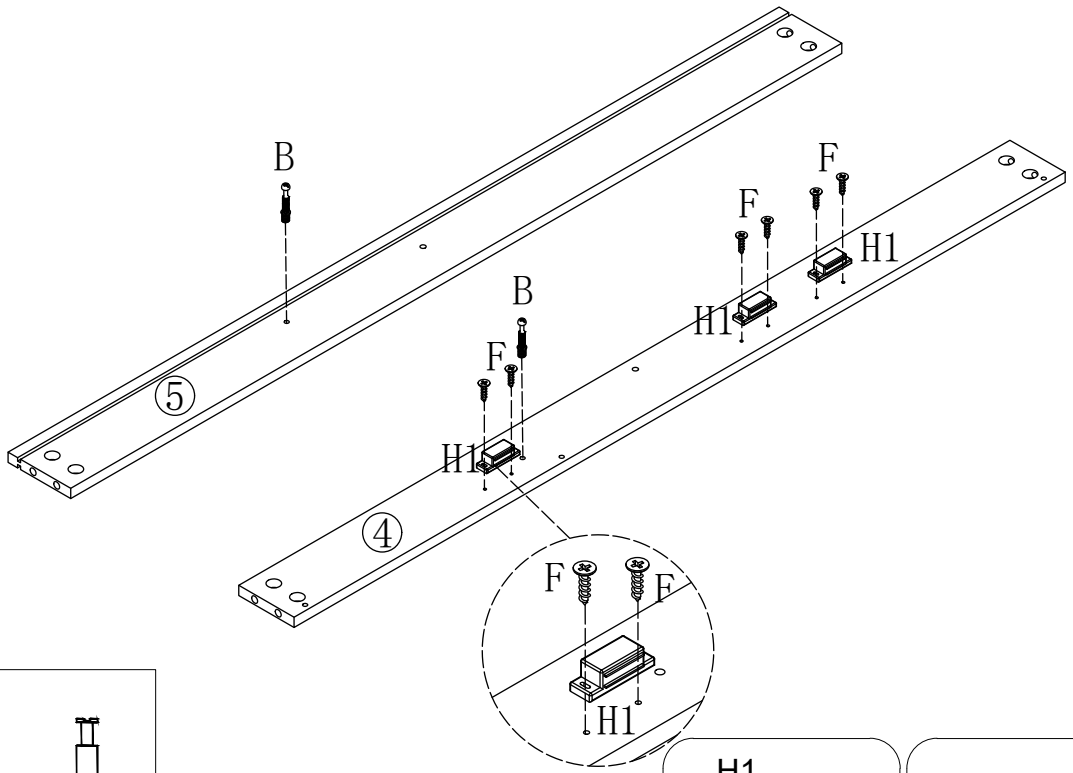

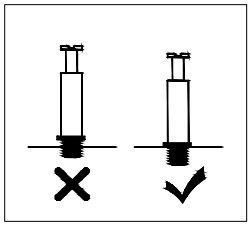

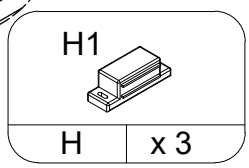

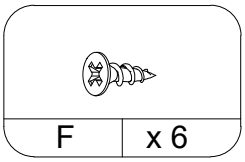

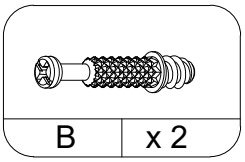

STEP 13

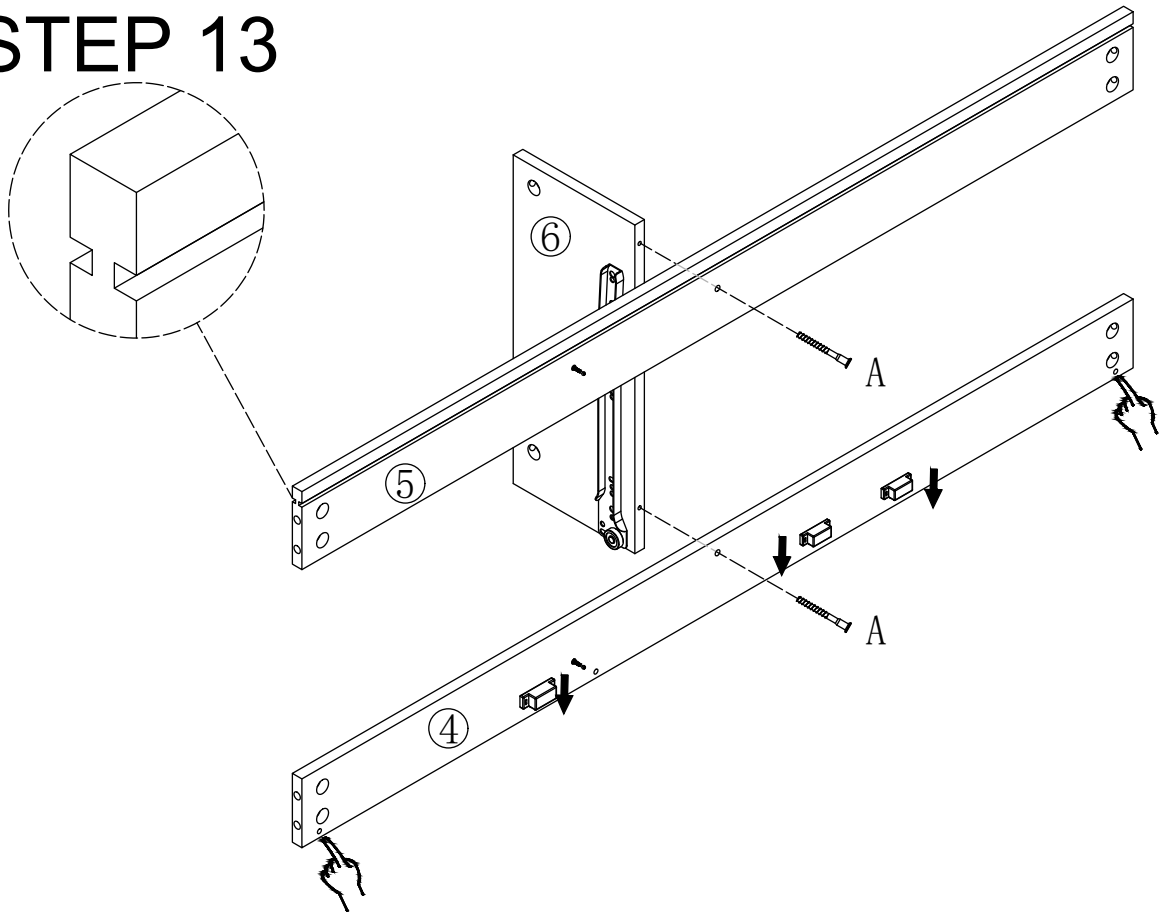

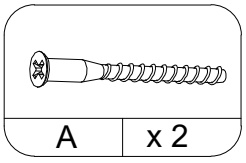

STEP 14

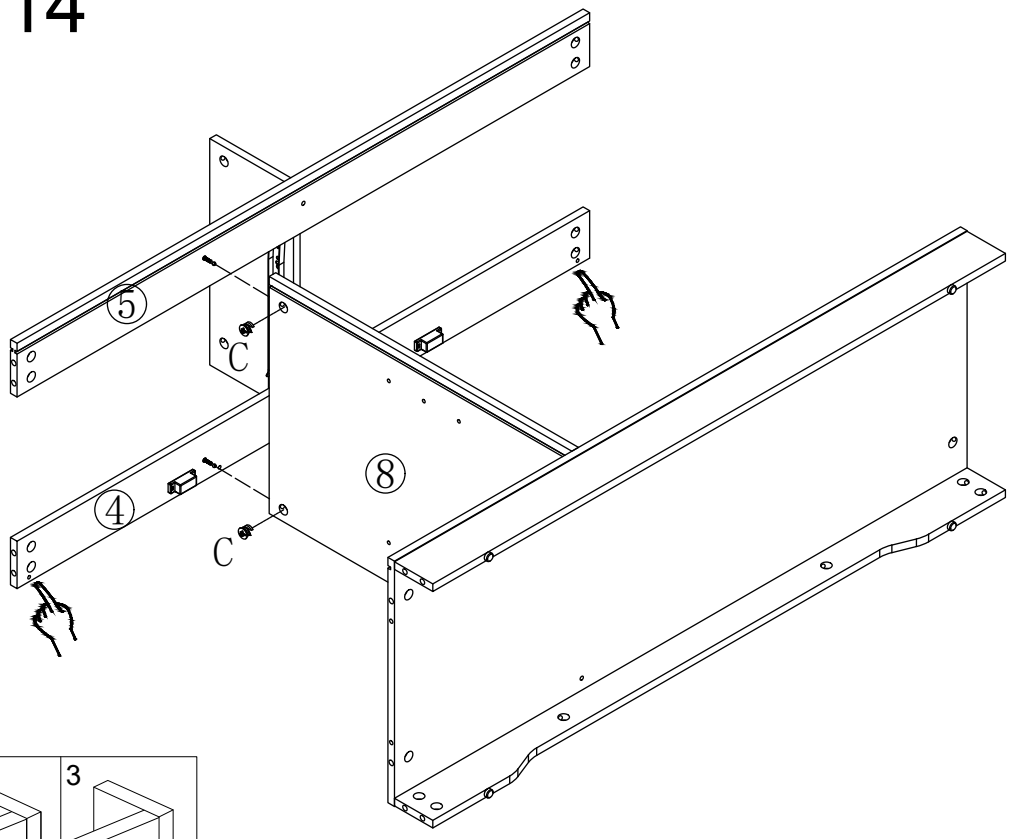

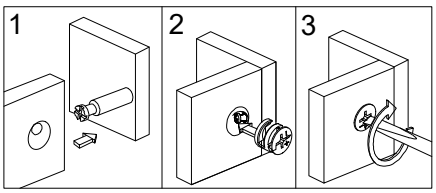

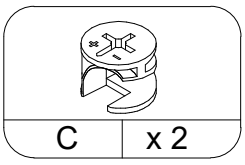

STEP 15

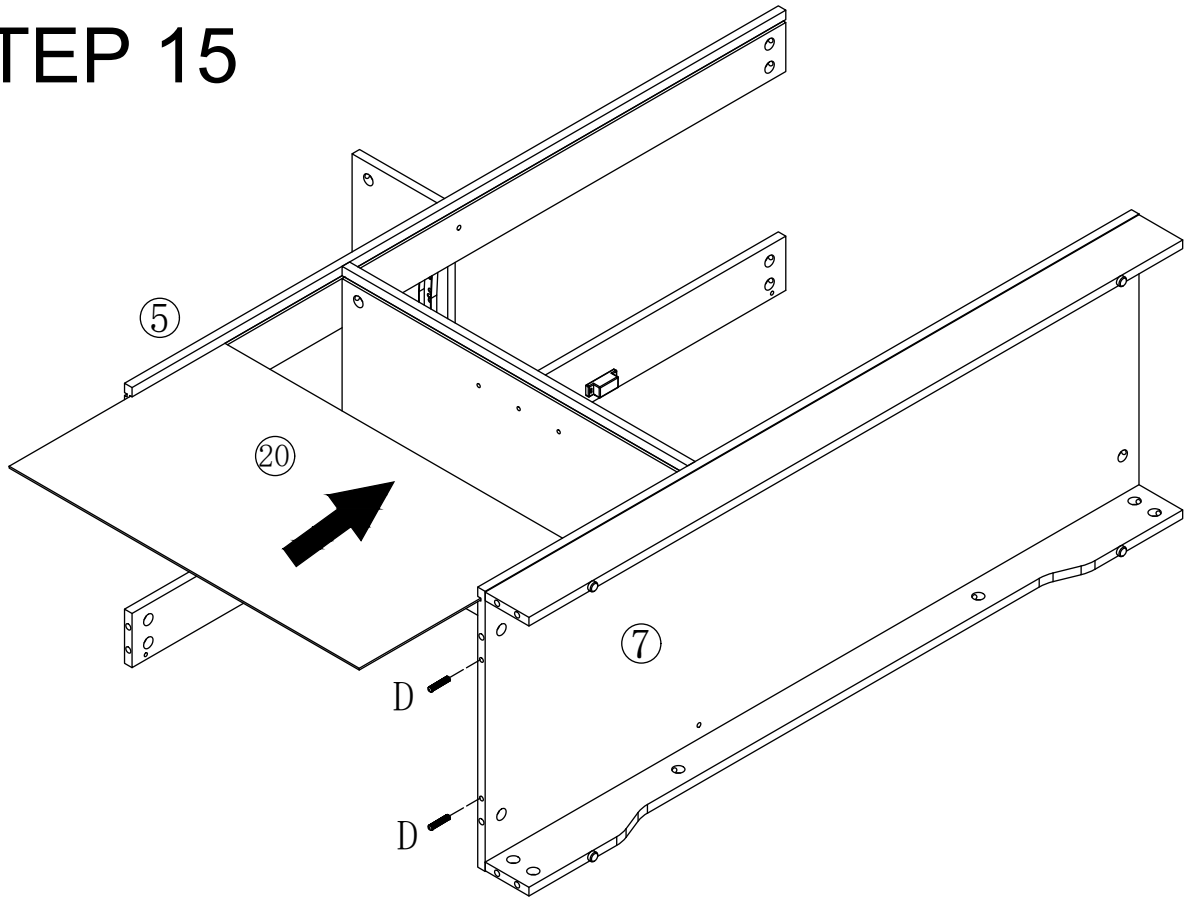

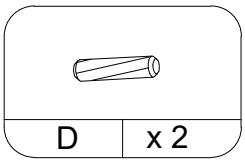

STEP 16

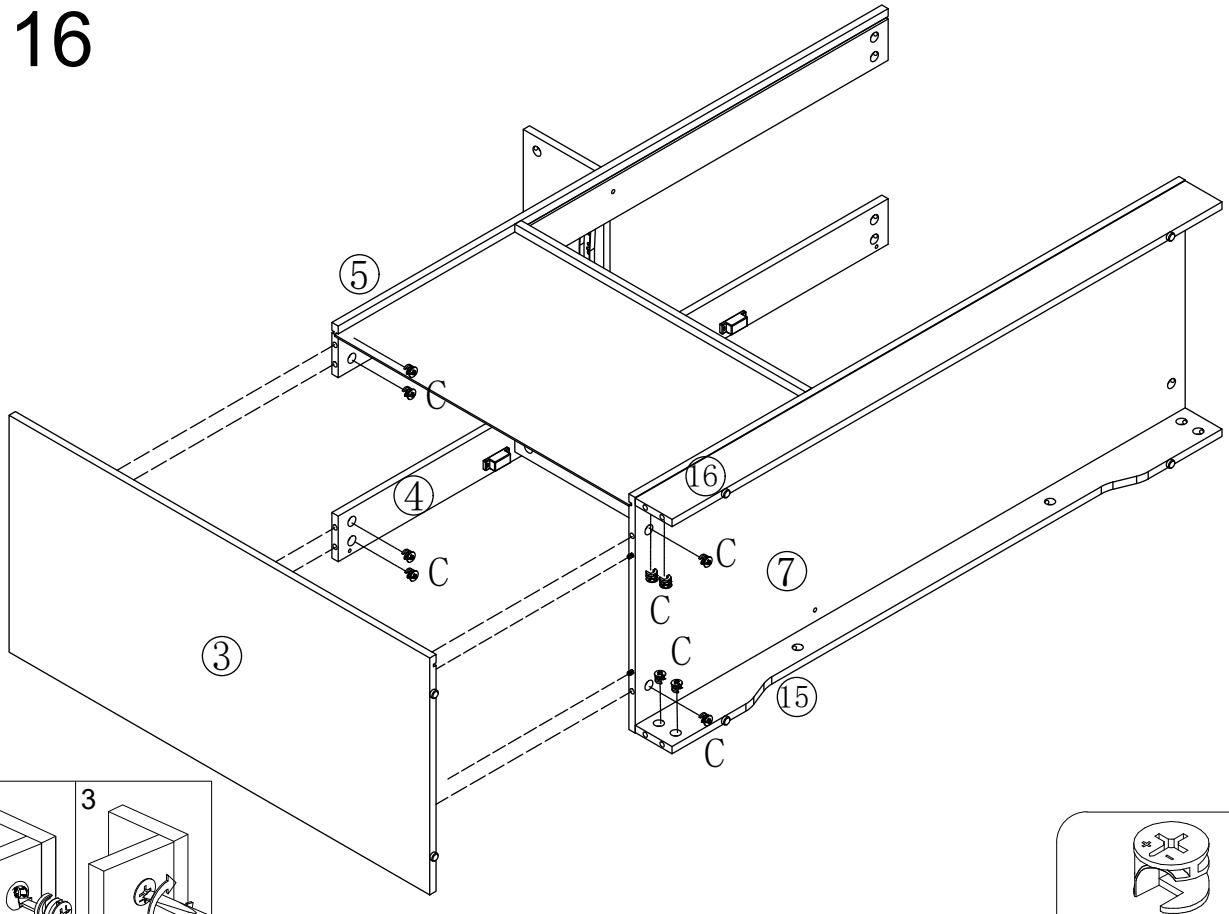

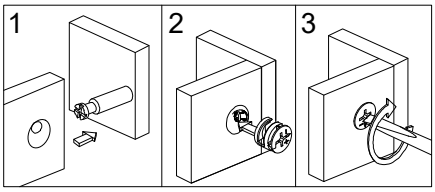

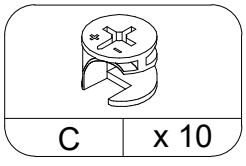

STEP 17

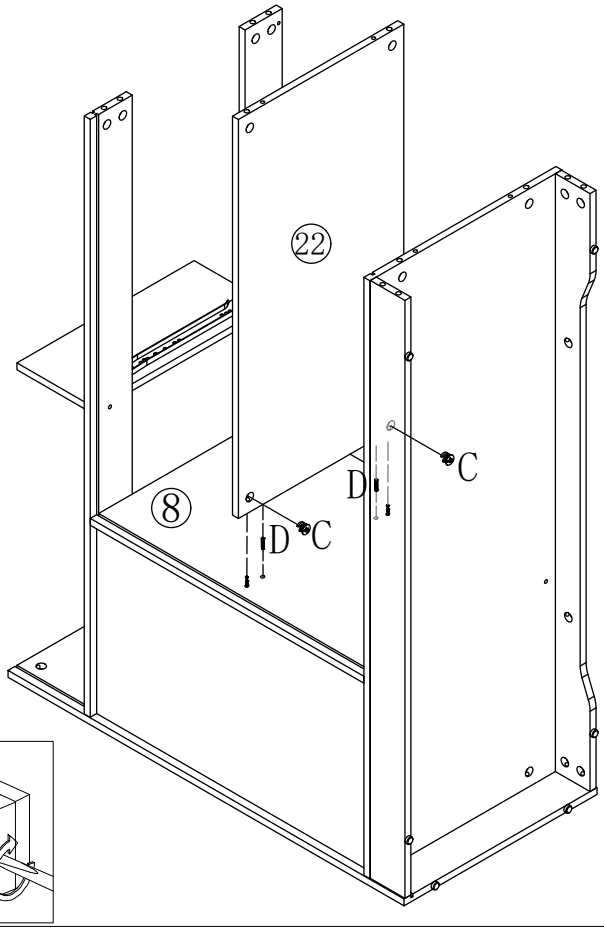

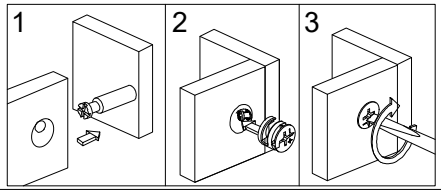

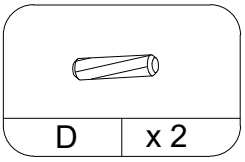

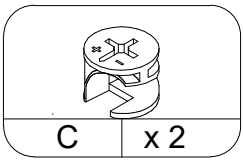

STEP 18

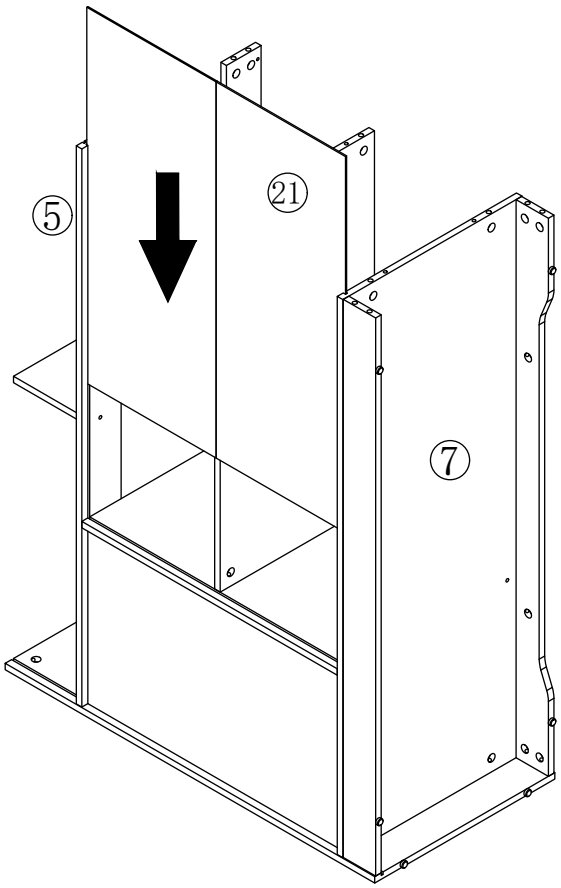

STEP 19

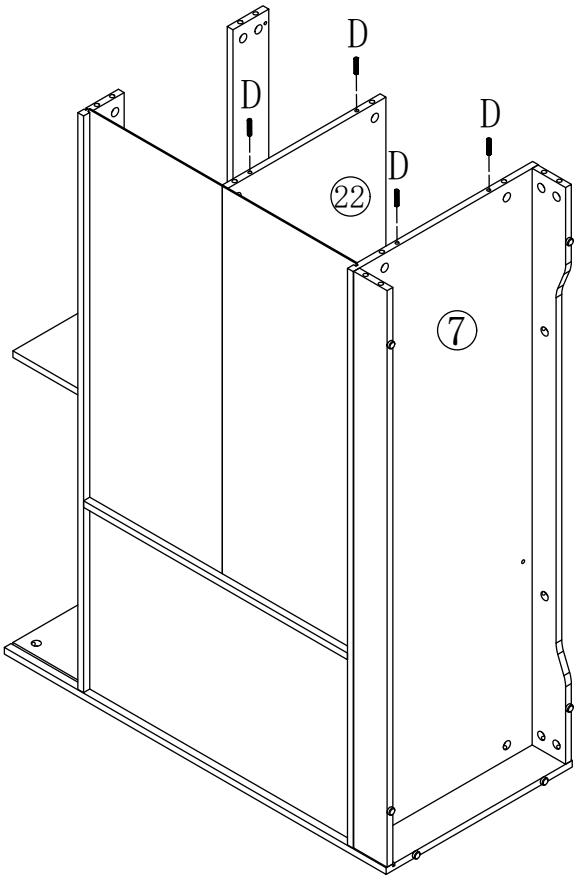

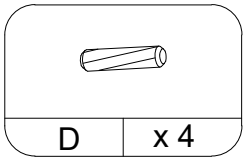

STEP 20

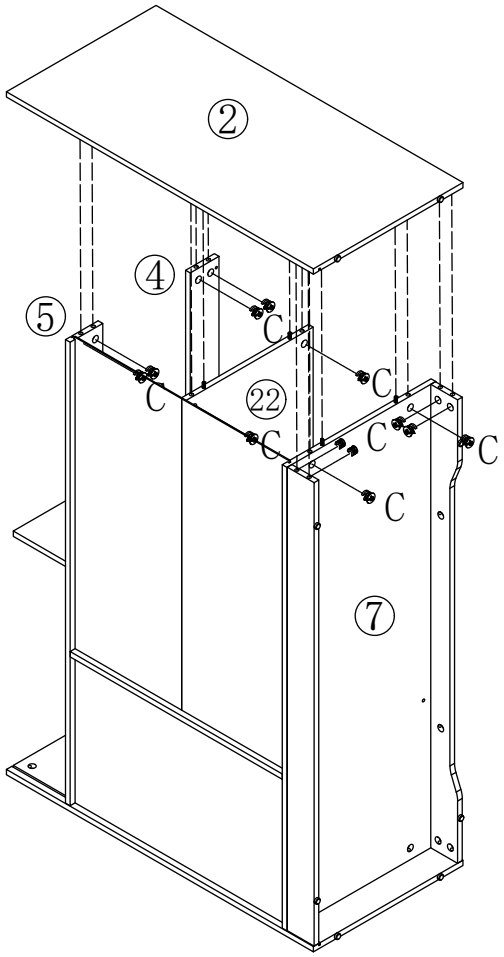

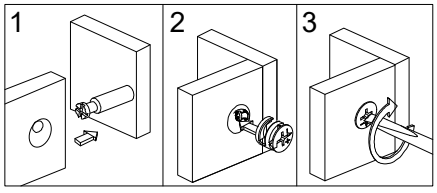

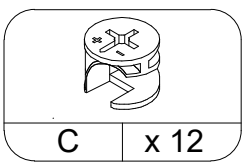

STEP 21

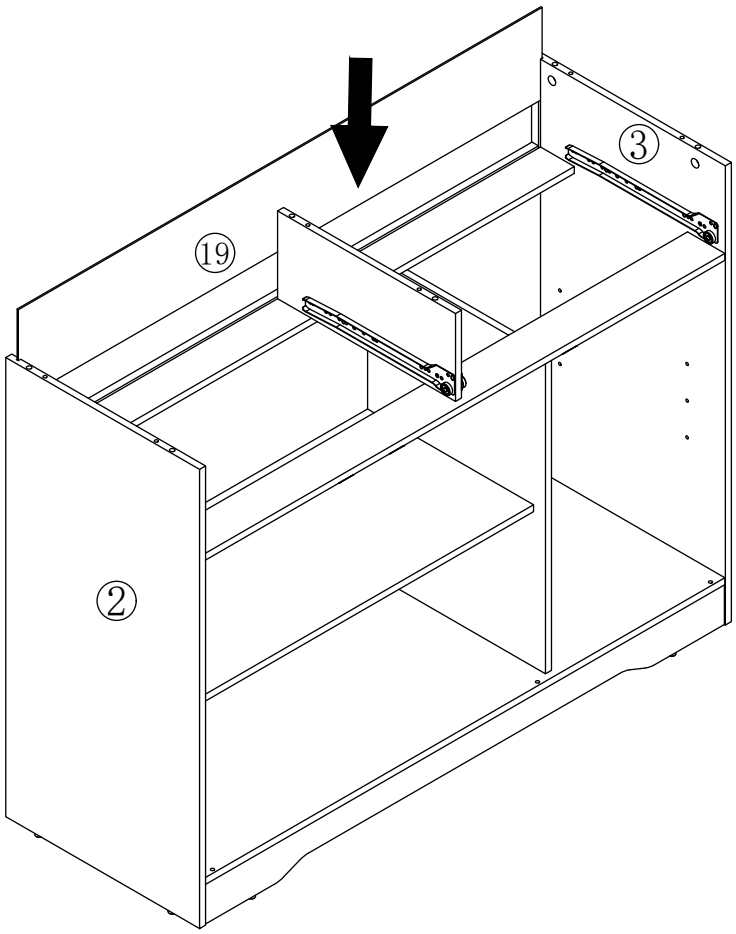

STEP 22

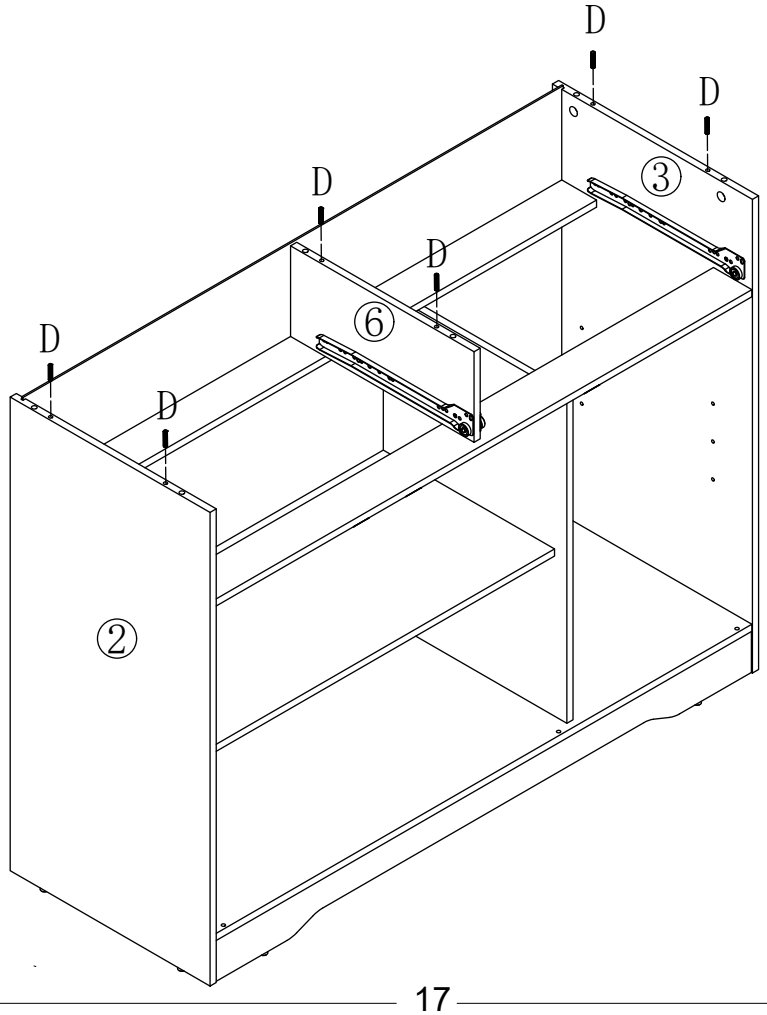

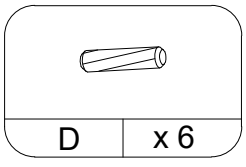

STEP 23

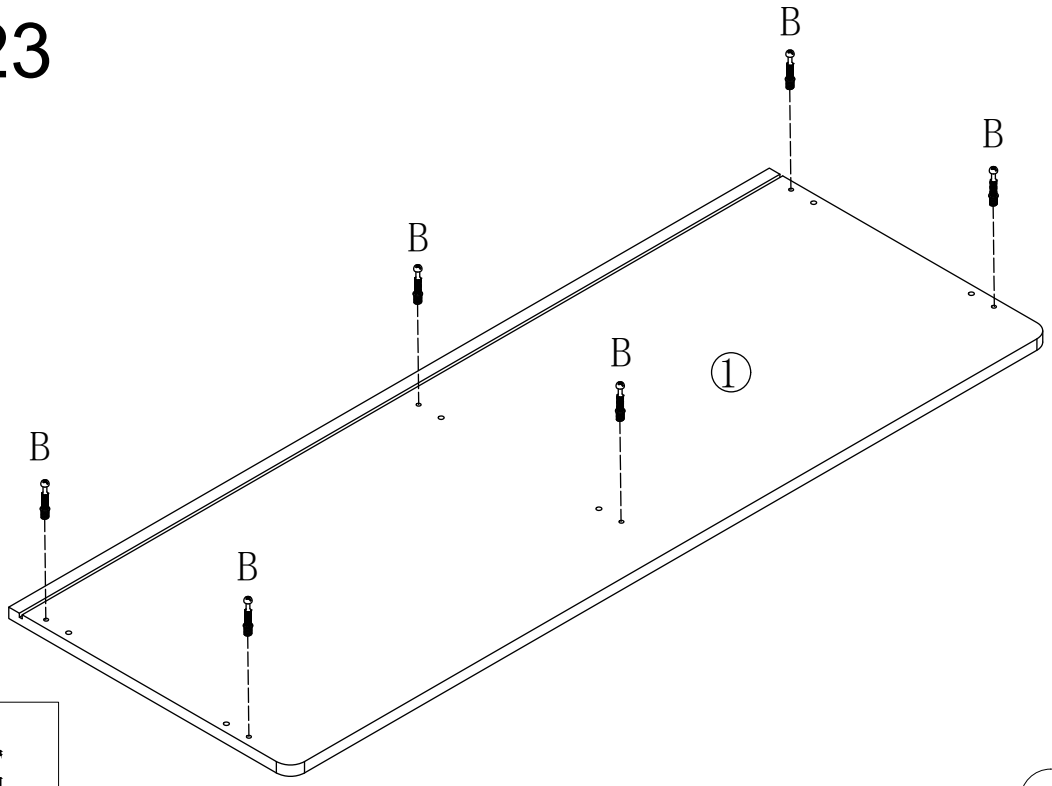

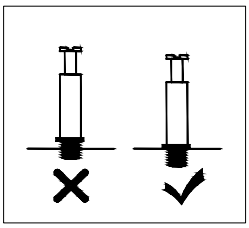

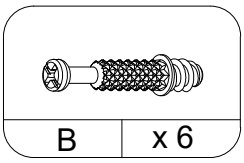

STEP 24

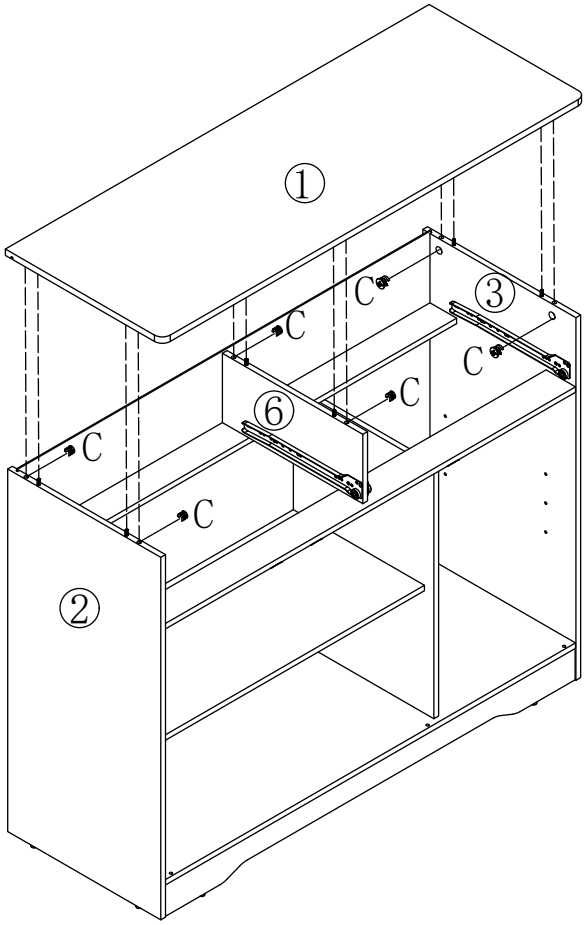

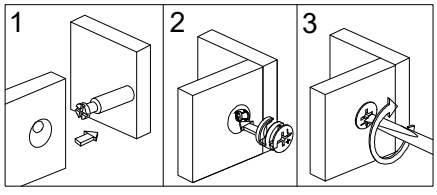

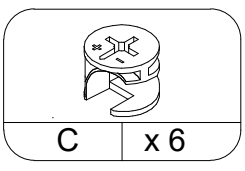

STEP 25

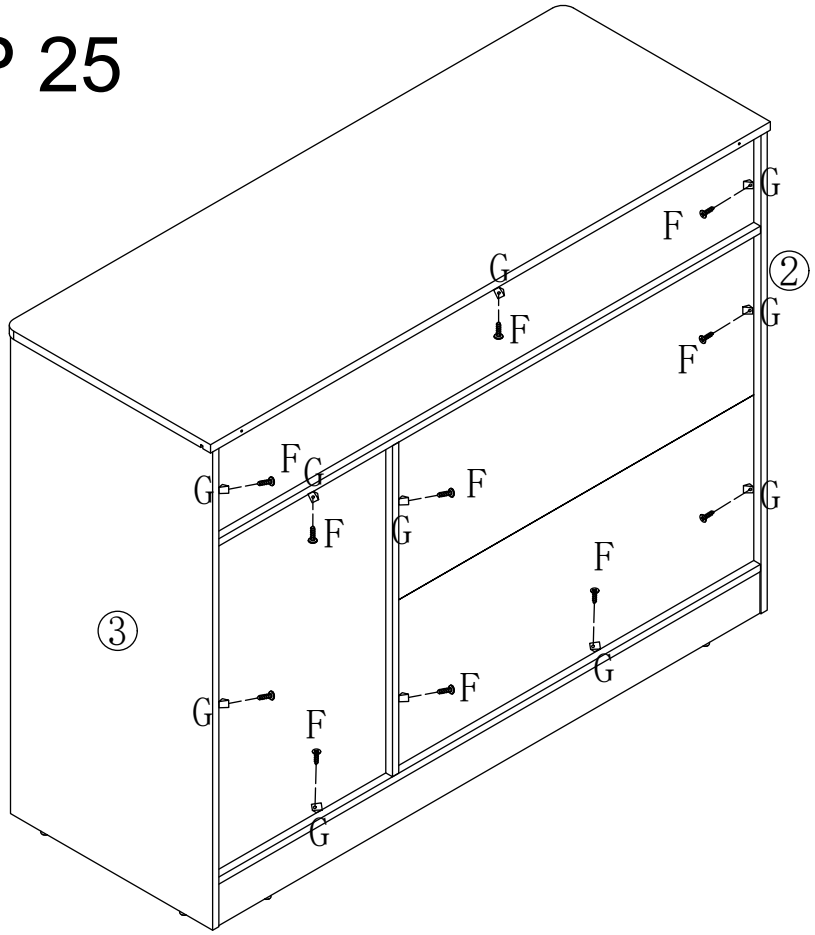

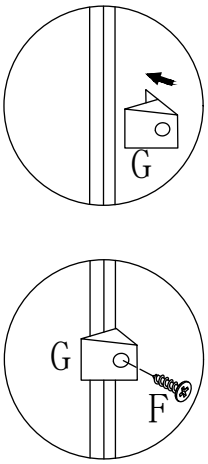

G	x 11

F	x 11

STEP 26

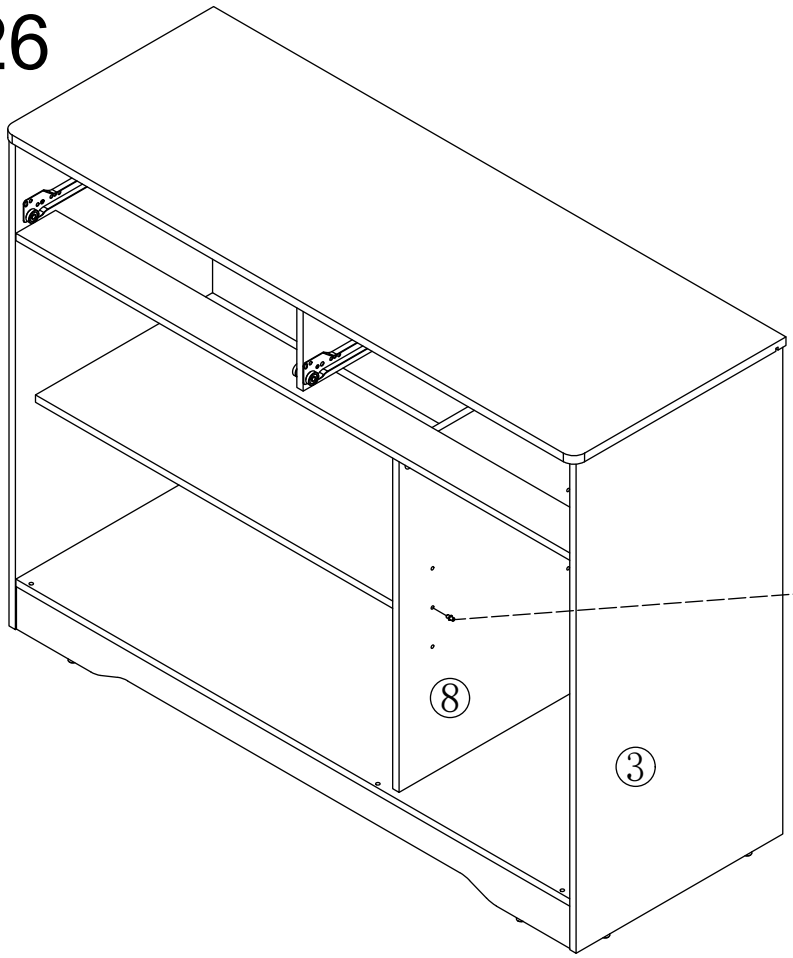

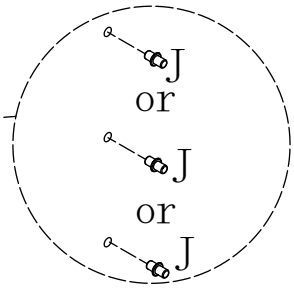

J	x 4

STEP 27

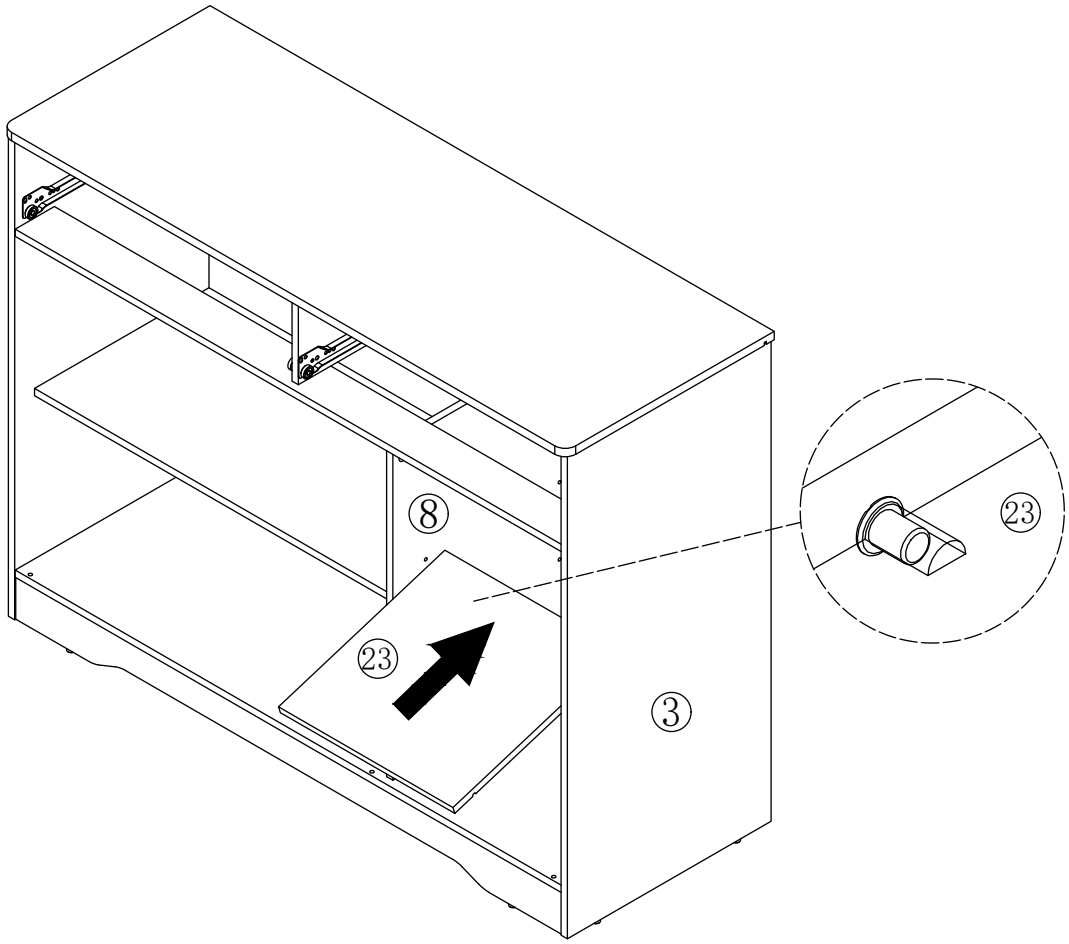

STEP 28

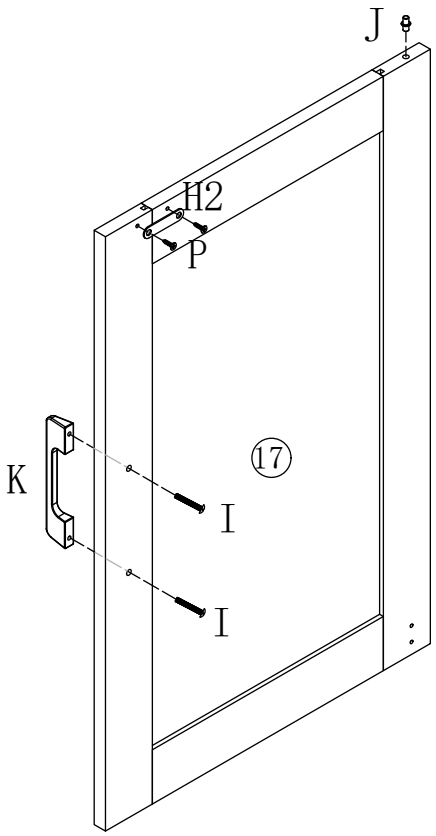

H2	I	J	K	P
H x 1	I x 2	J x 1	K x 1	P x 2

STEP 29

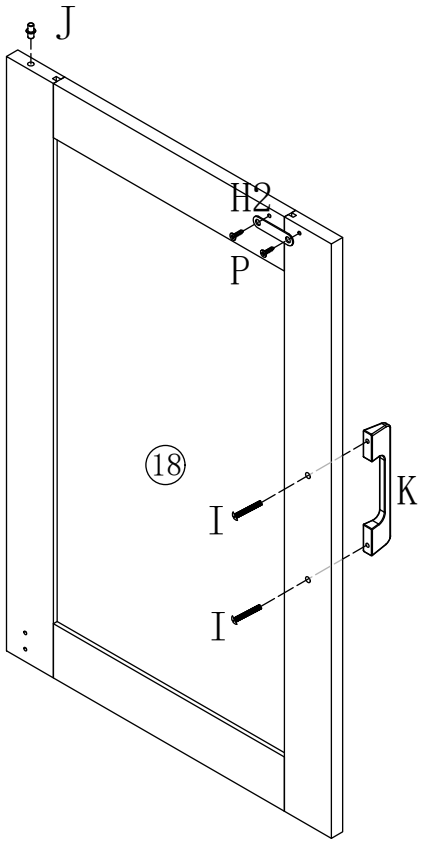

x 2

H2	I	J	K	P
H x 2	I x 4	J x 2	K x 2	P x 4

STEP 30

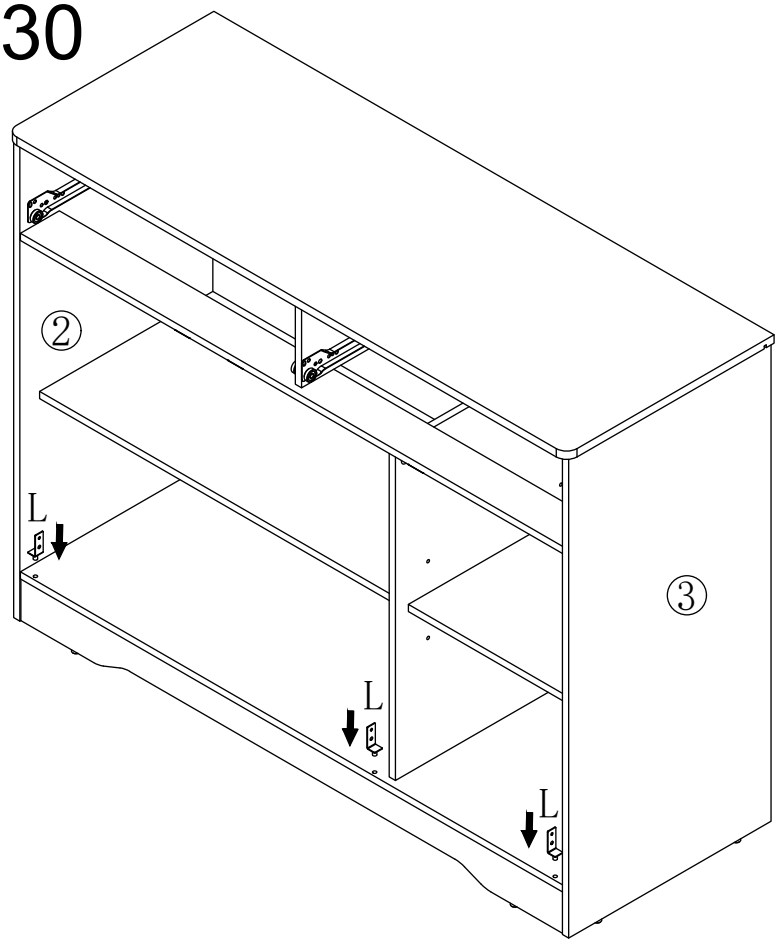

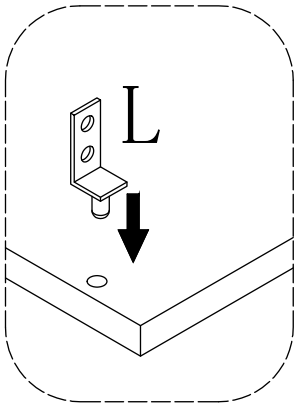

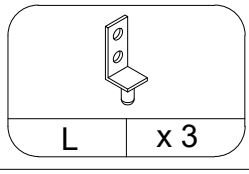

L	x 3

STEP 31

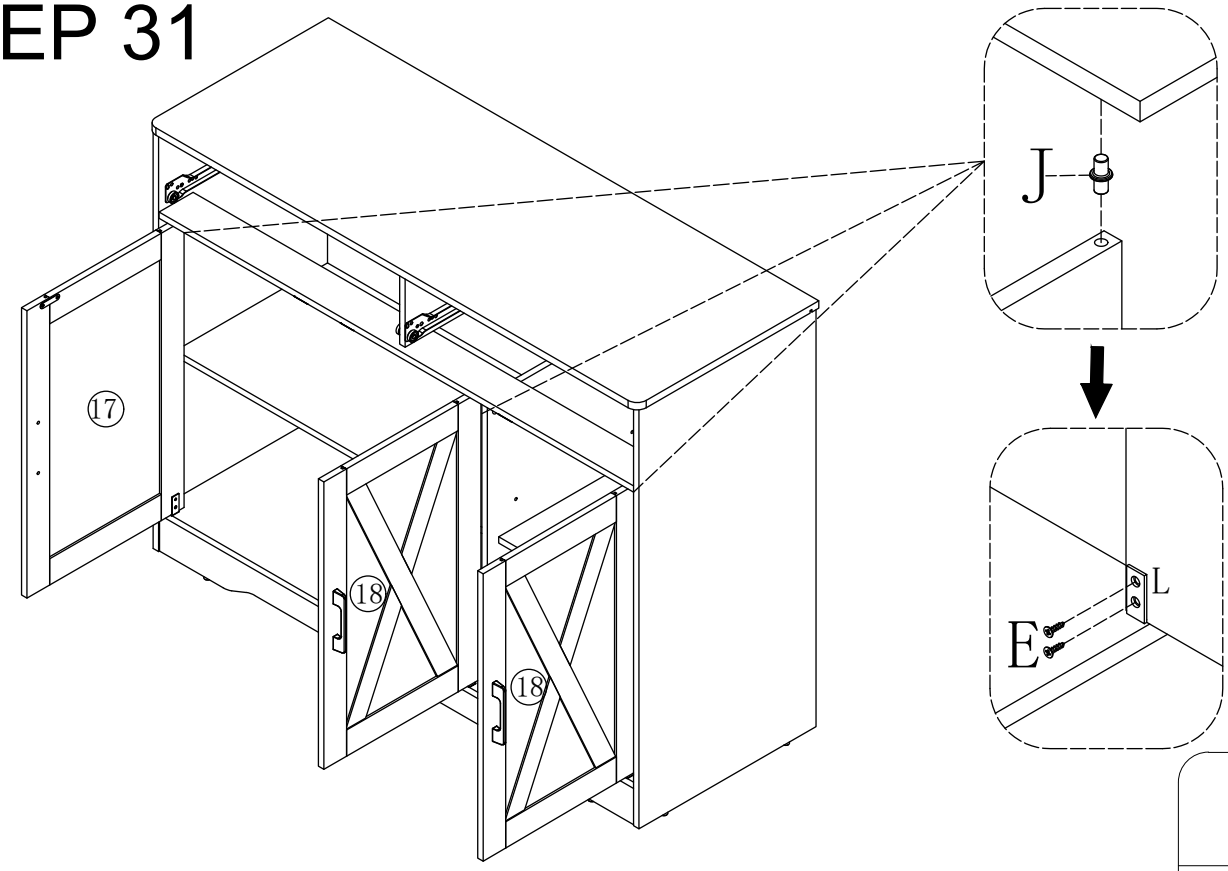

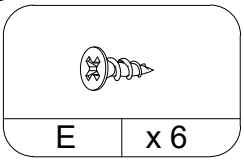

STEP 32

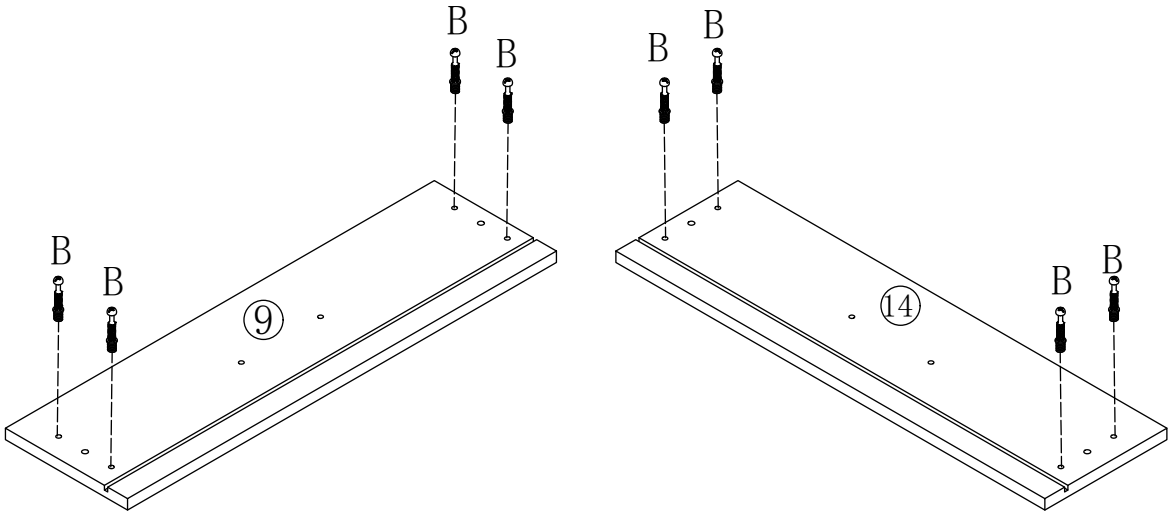

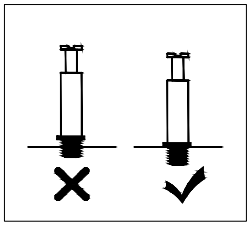

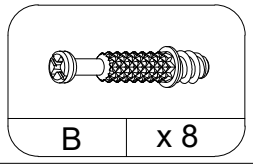

STEP 33

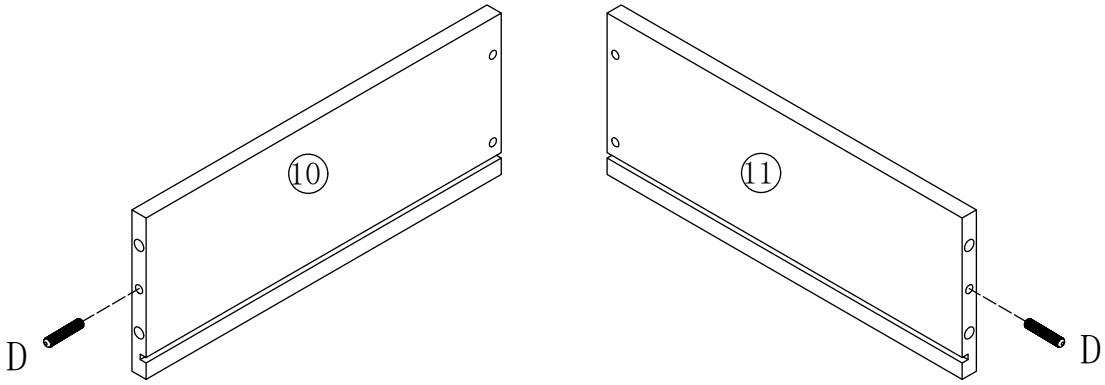

x 2

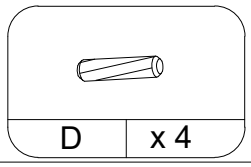

STEP 34

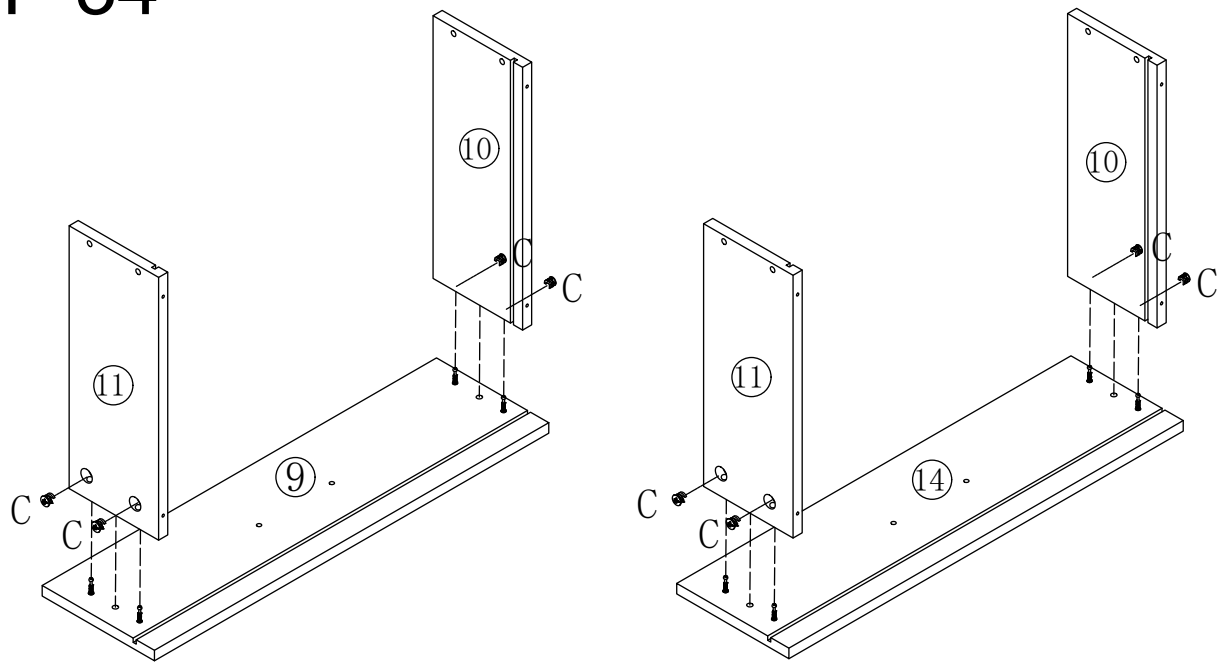

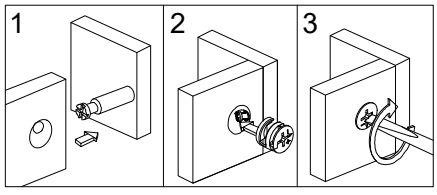

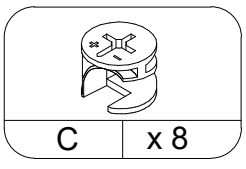

STEP 35

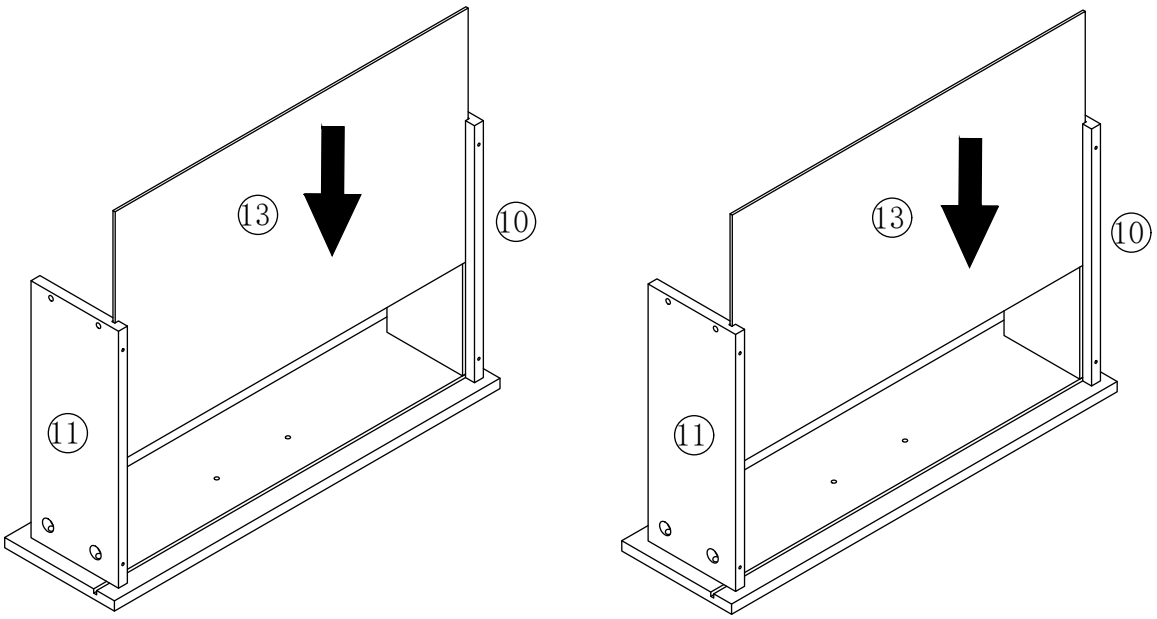

STEP 36

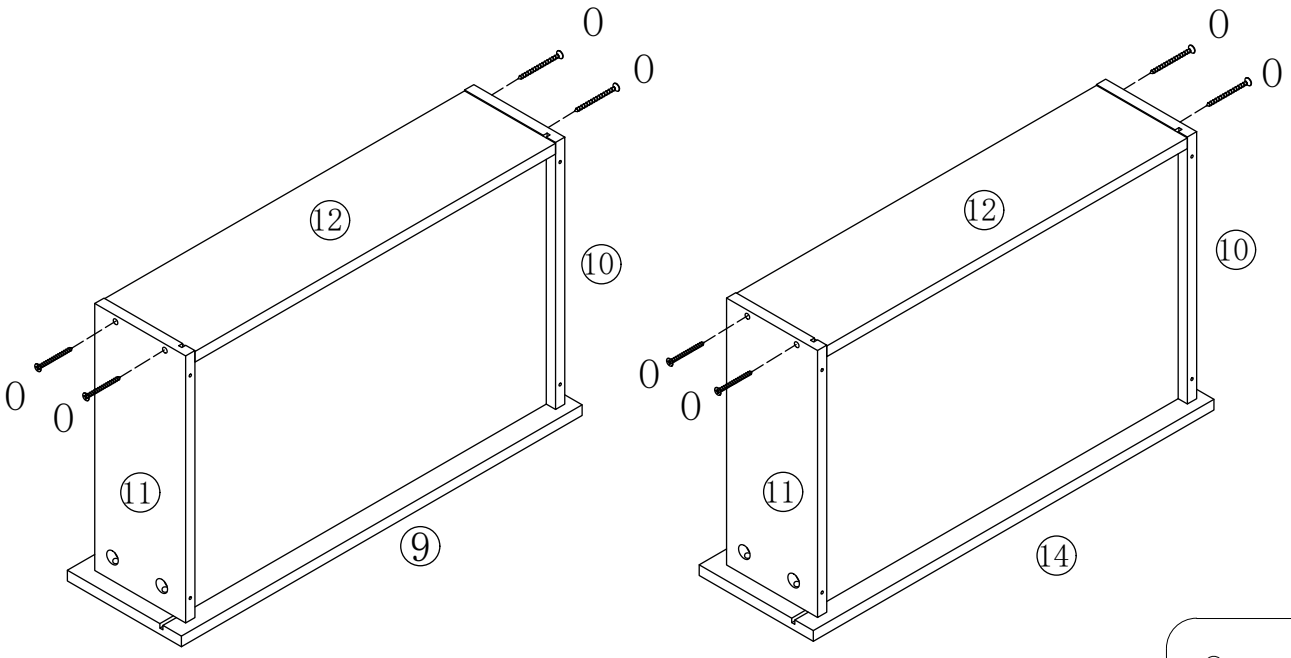

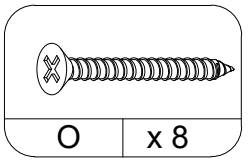

STEP 37

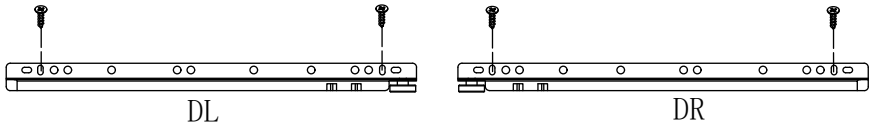

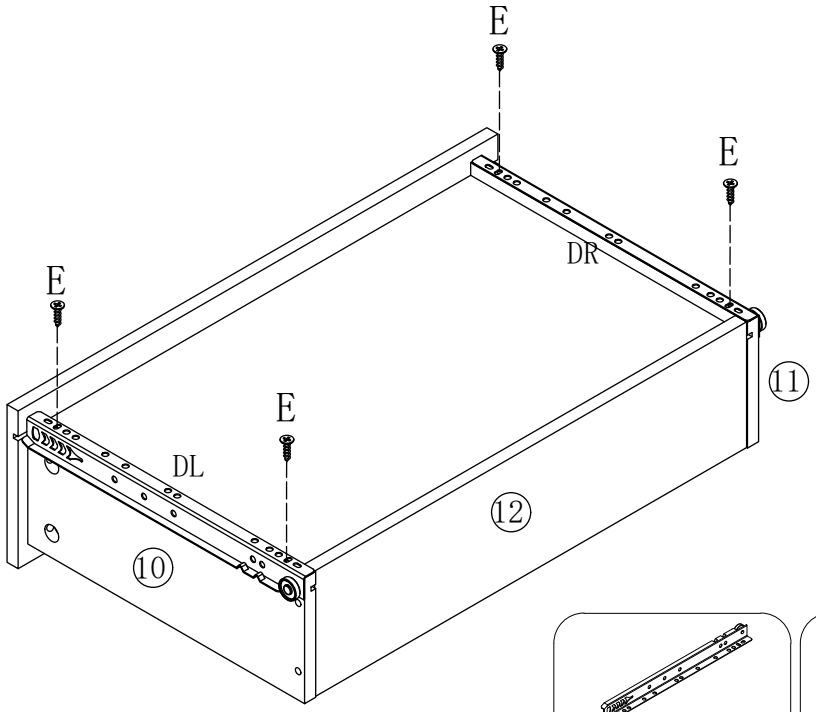

x 2

DL | x 2

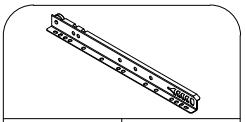

DR | x 2

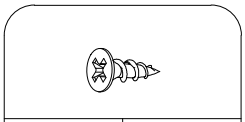

E | x 8

STEP 38

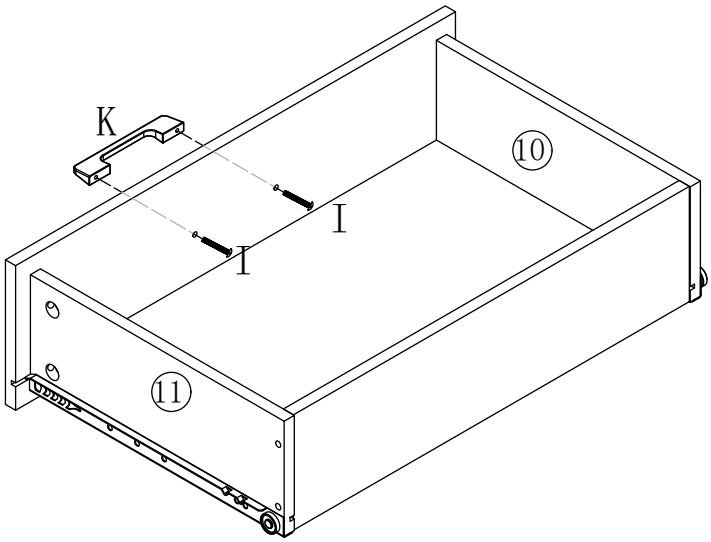

x 2

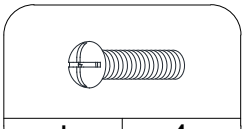

I | x 4

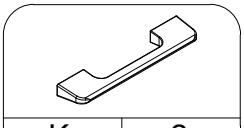

K | x 2

STEP 39

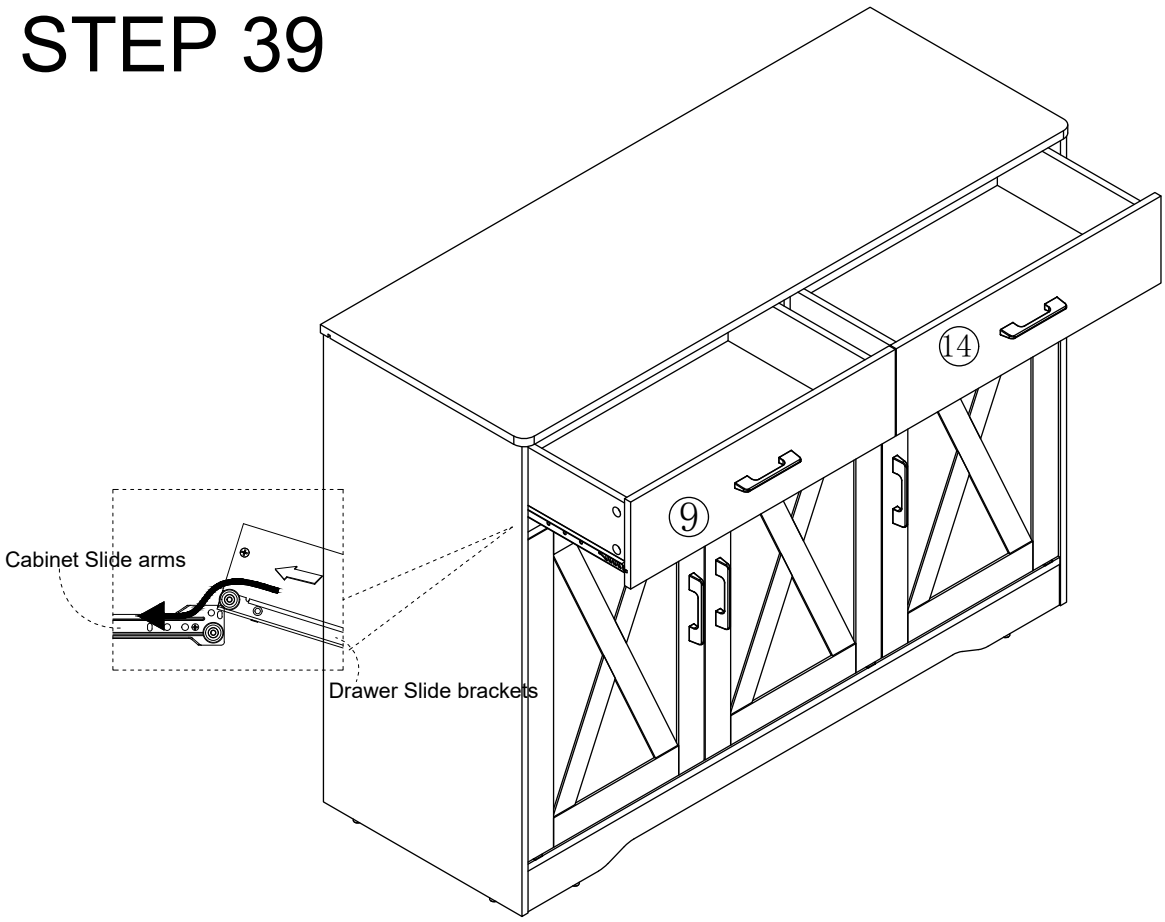

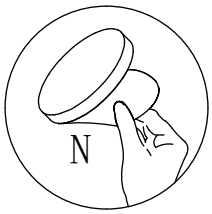

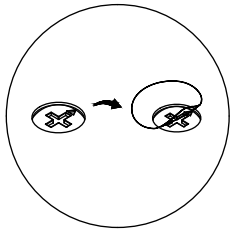

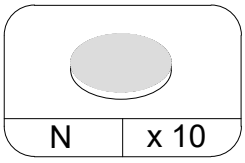

STEP 40

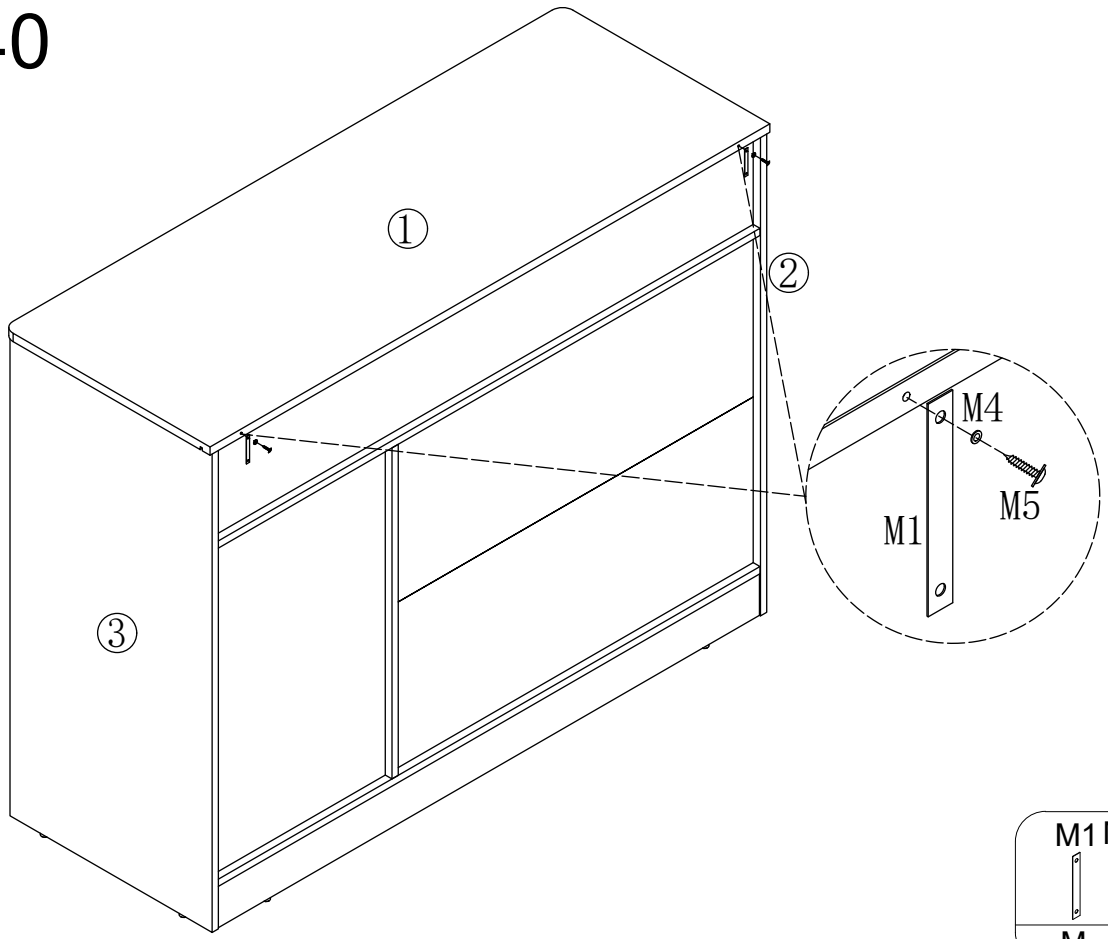

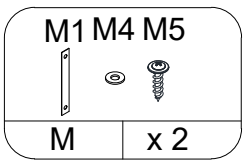

STEP 41

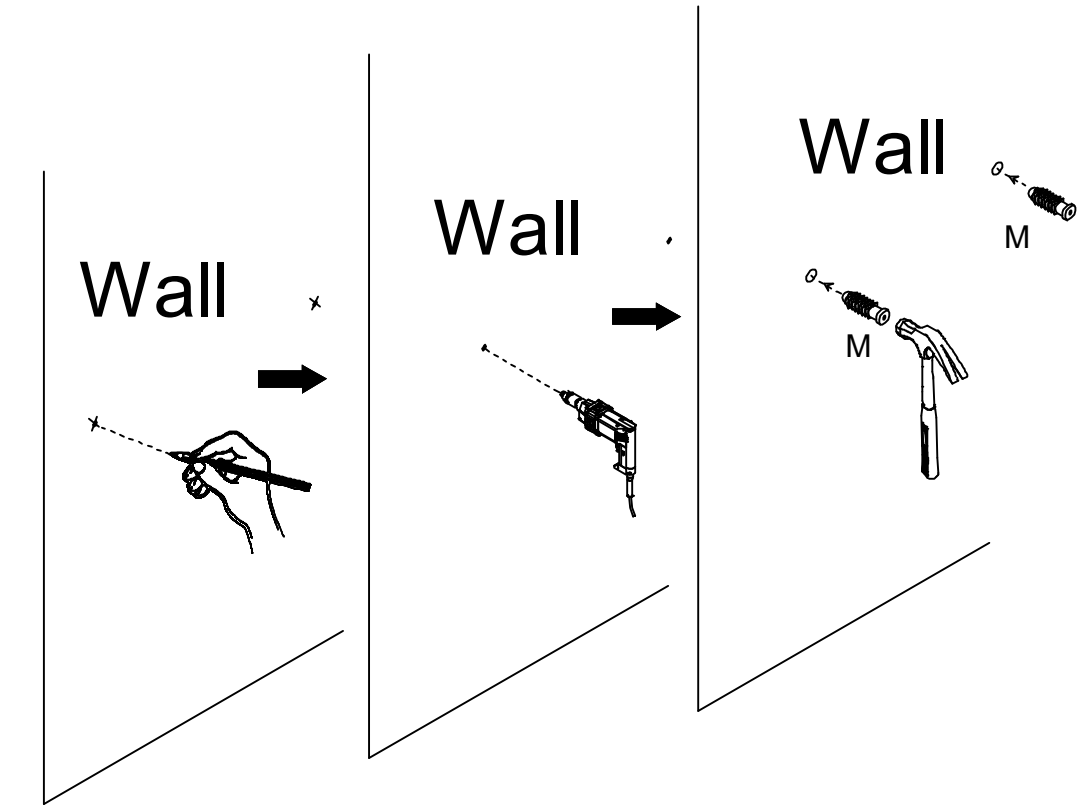

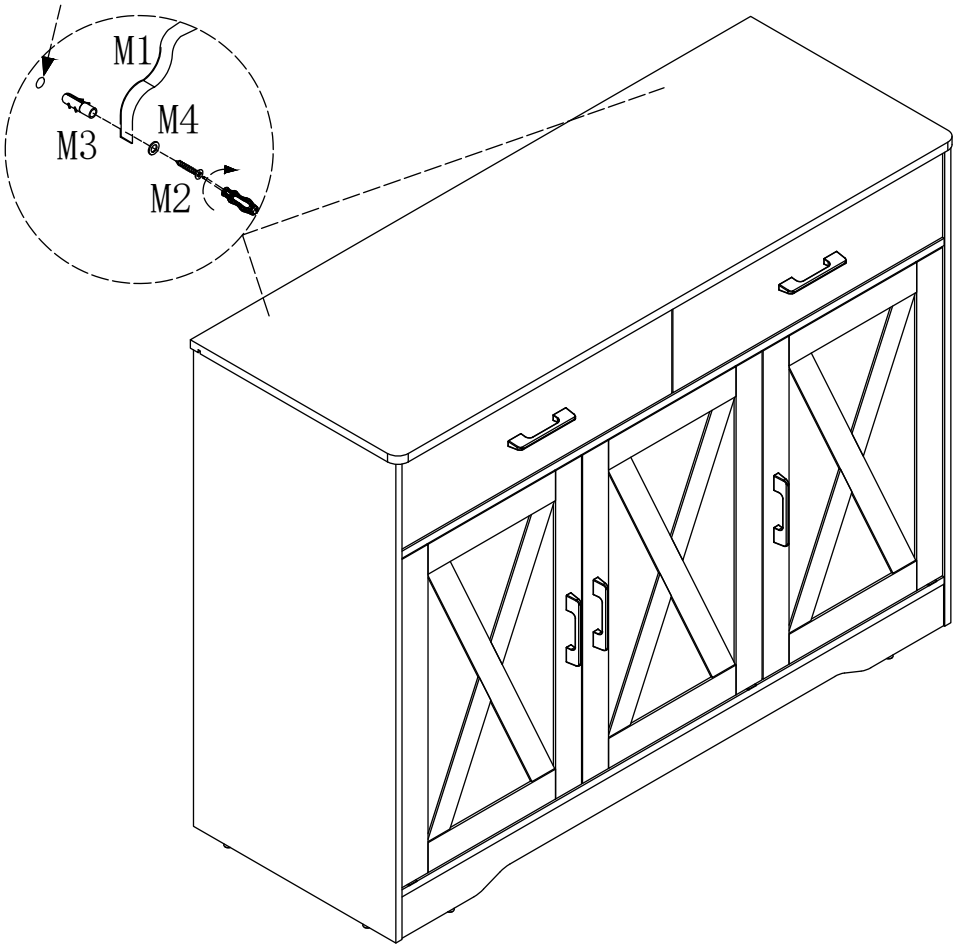

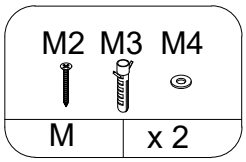

STEP 42

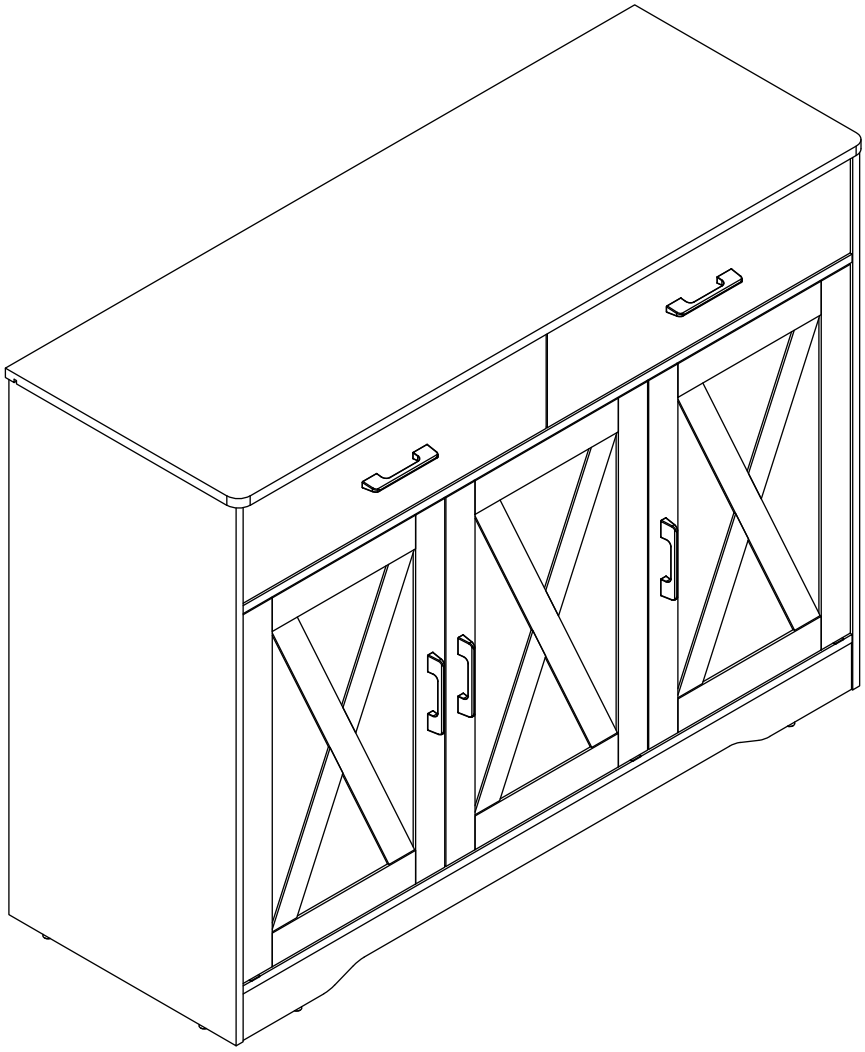

FURNITURE CARE AND MAINTENANCE

Medium - Density Fiberboard and Particle board

Thank you for your purchase. We want your item to last as long as possible. To ensure the product gives you years of service, please refer to this care and maintenance guide.



MAINTENANCE

· Tighten all bolts and screws again within the first 2 weeks of assembly
· Check the tightness of all bolts every 2 months, tighten them if necessary



CLEANING

· Clean the surface of the MDF (medium - density fiberboard) or PB (particle board) with a lightly dampened cloth.
· Small amount of mild soap can be used if necessary
· Dry the surface immediately after cleaning.

⚠ DO NOT use bleach or alcohol detergent to clean the surface.
⚠ DO NOT apply wood treatment on parts made with MDF and PB.
Medium - density fiberboard and Particle board will swell and distort when suffer from water damage.
Make sure to dry the furniture immediately after cleaning