# Assembly Instructions

Please check that you have all the parts listed before you start assembling, if you do find that something is missing, do not continue assembly, please contact us immediately.

NOTE: Please do not completely tighten all the hardware until the entire assembly is complete!

Bauanleitung
Bitte überprüfen Sie, ob alle Teile mitgeliefert sind, bevor Sie mitder Montage beginnen. Wenn Side festlegen, dass etwas fehlt, setzen Sie die Montage nicht fort, Bitte kontaktieren sie uns sofort.
Achtung: Bitte ziehen Sie nicht alle schrauben fest, bevor die Montage abgeschlossen ist!

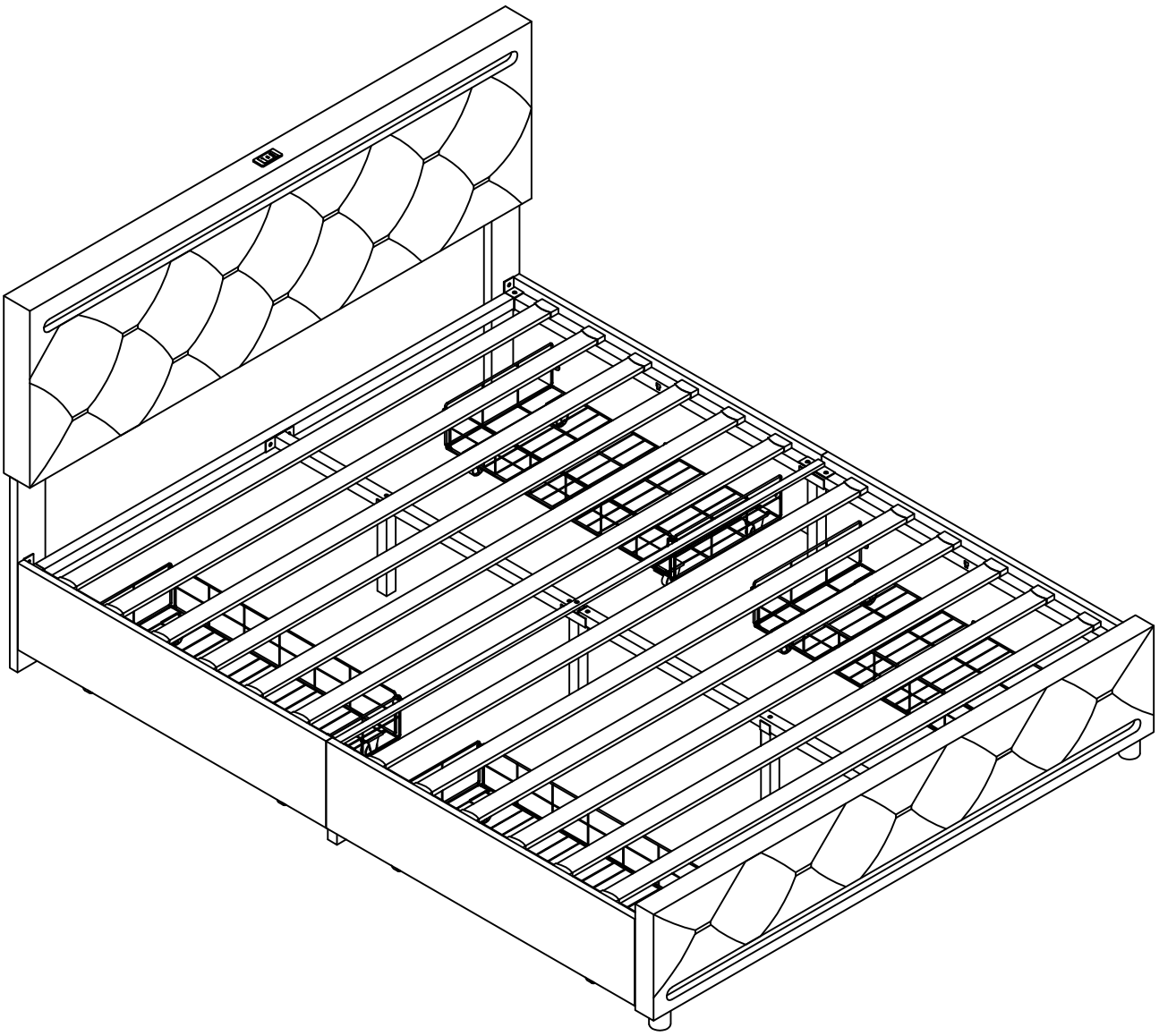

# BOX-1/2

| | | | |
|---|---|---|---|
| ① 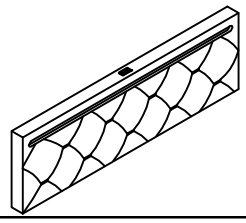 x 1 | ③ 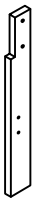 x 1 | ④ 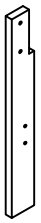 x 1 | ⑥ 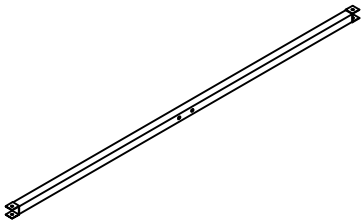 x 1 |
| ⑦ 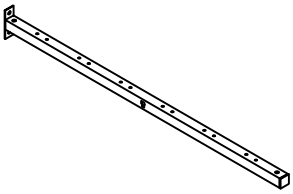 x 4 | ⑧ 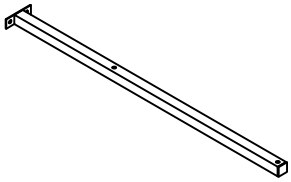 **x 1** | ⑨ 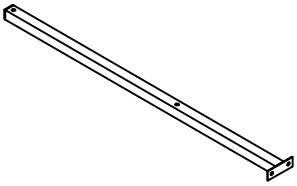 x 1 | |
| ⑩ 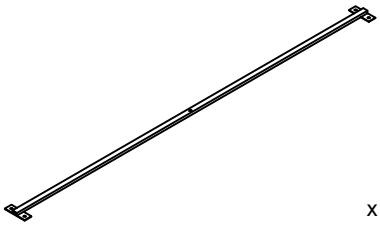 x 1 | ⑭ 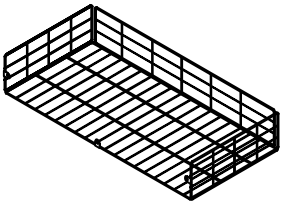 x 4 | ⑰ 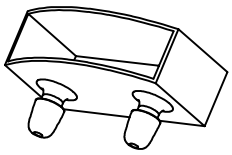 x 24 | |
| 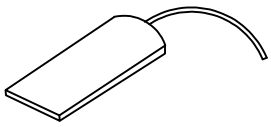 hardware kit | | | |

# BOX-2/2

| | | | | |
|---|---|---|---|---|
| ② 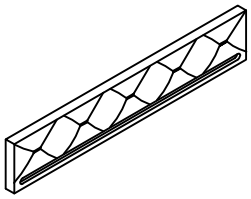 x 1 | ⑤ 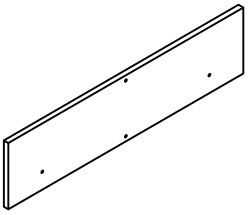 x 4 | ⑪ 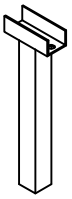 x 3 | ⑫ 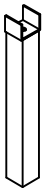 x 2 | |
| ⑬ 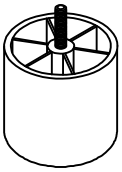 x 2 | ⑮ 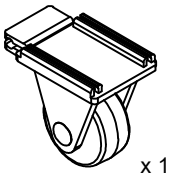 x 16 | ⑯ 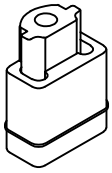 x 8 | ⑱ 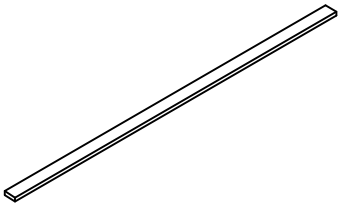 x 12 | ⑲  x 2 |
| ⑳ 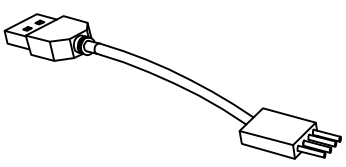 x 1 | ㉑ 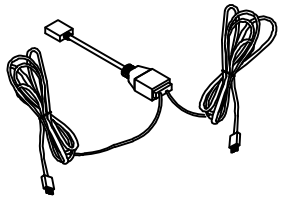 x 1 | ㉒ 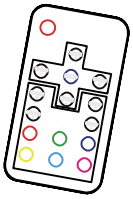 x 1 | | |
| ㉓ 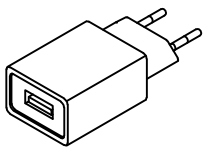 x 1 | ㉔ 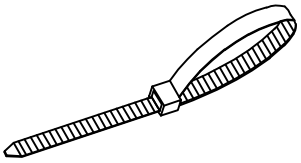 x 7 | | | |

# Stückliste

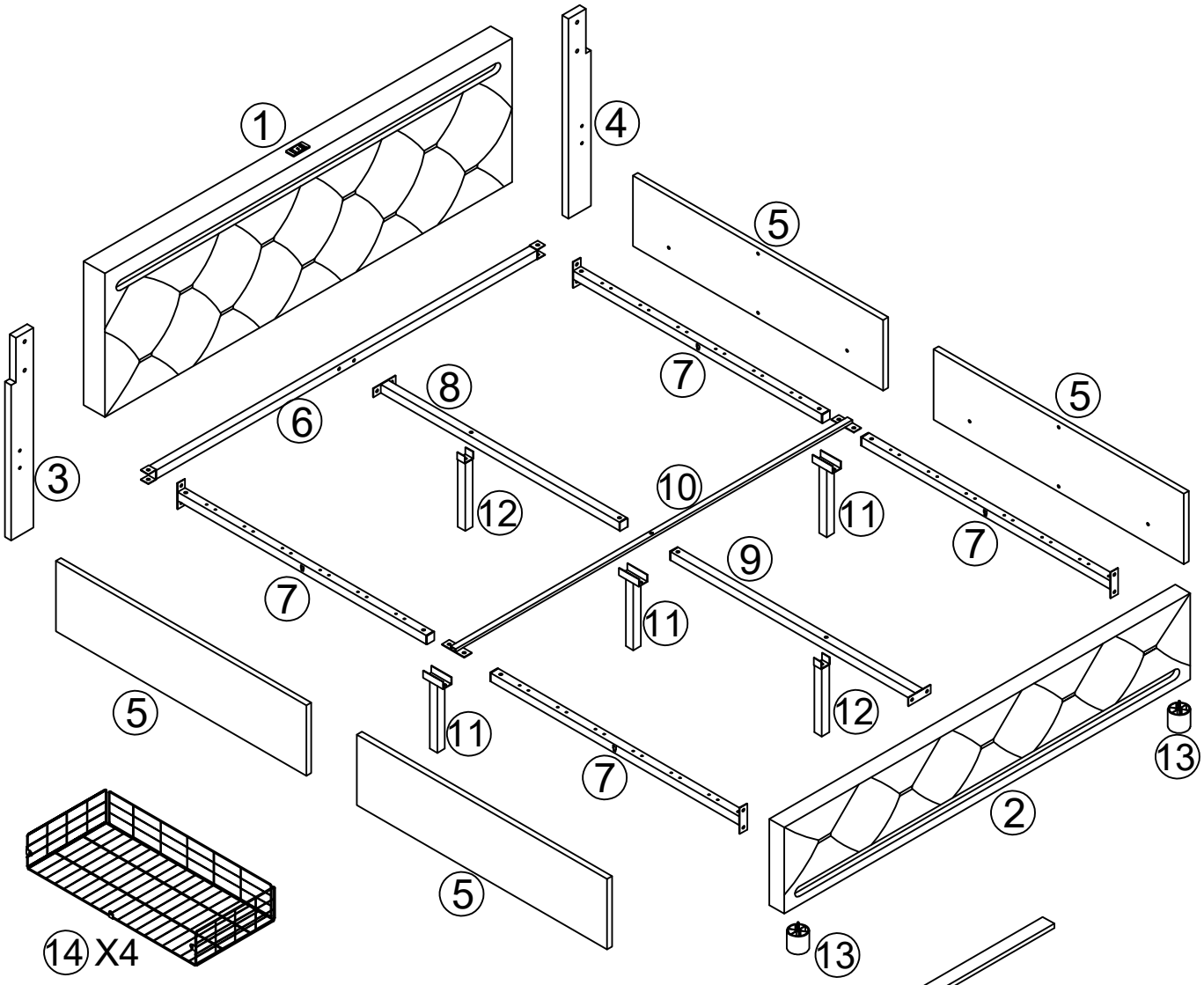




14 X4

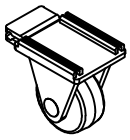

15

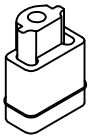

16



17

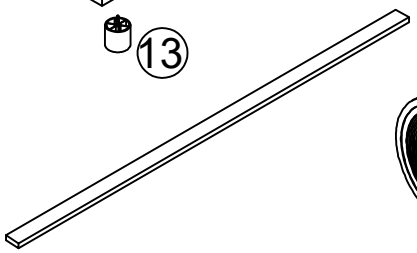

18



19 X2

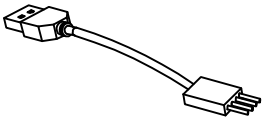

20

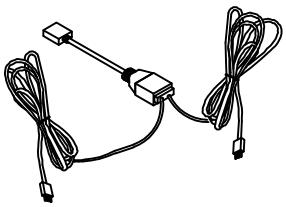

21

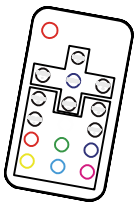

22

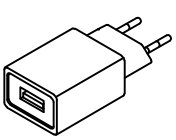

23

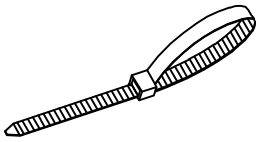

24 X7

| | | | |
|---|---|---|---|
| ① 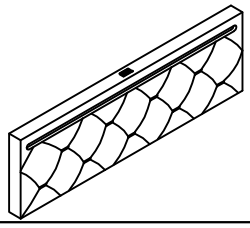 x 1 | ② 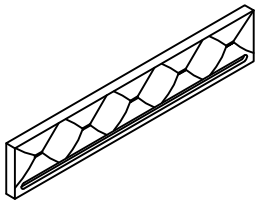 x 1 | ③ 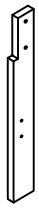 x 1 | ④ 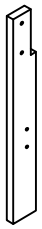 x 1 |
| ⑤ 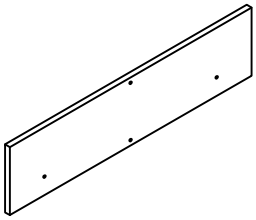 x 4 | ⑥ 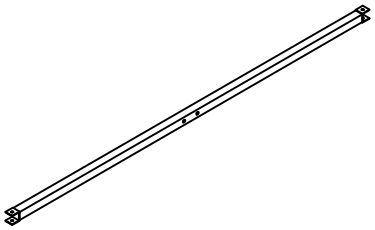 x 1 | ⑦ 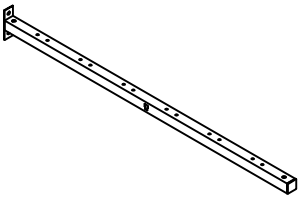 x 4 | |
| ⑧ 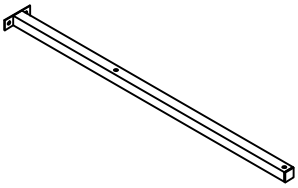 **x 1** | ⑨ 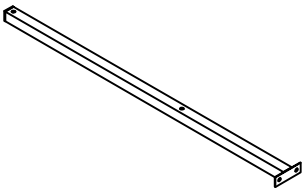 x 1 | ⑩ 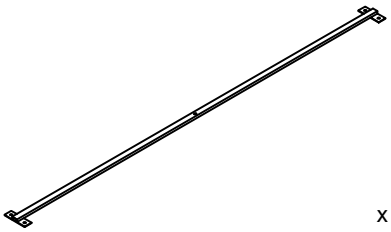 x 1 | |
| ⑪ 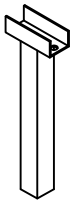 x 3 | ⑫  x 2 | ⑬ 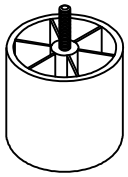 x 2 | |
| ⑭ 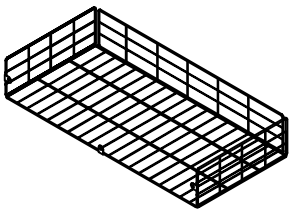 x 4 | ⑮ 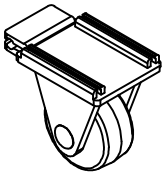 x 16 | ⑯ 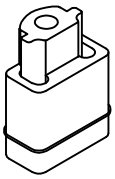 x 8 | |
| ⑰ 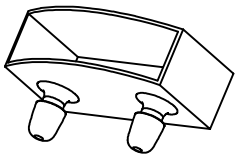 x 24 | ⑱ 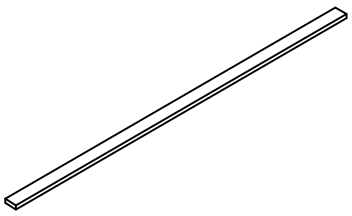 x 12 | ⑲  x 2 | |
| ⑳ 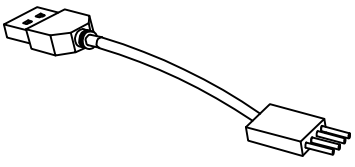 x 1 | ㉑ 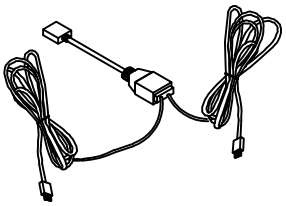 x 1 | ㉒ 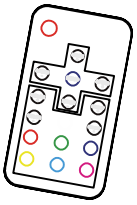 x 1 | |
| ㉓ 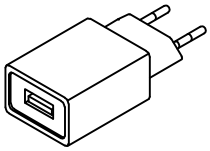 x 1 | ㉔ 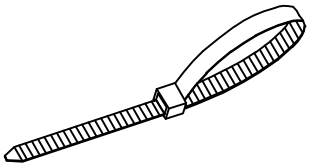 x 7 | | |

# Hardware List- Hardware-Liste

| | | |
|---|---|---|
| Ax16+1 PCS 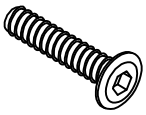 5/16X45mm | Bx10+1 PCS 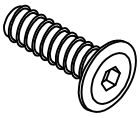 5/16X25mm | Cx4 PCS 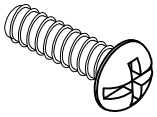 1/4*20mm |
| Dx12+1 PCS 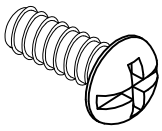 1/4*15mm | Ex4 PCS 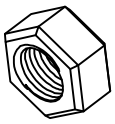 5/16 | Fx4 PCS 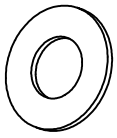 Ø19X5/16 |
| Gx12+1 PCS 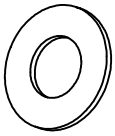 Ø16X1/4 | Hx1 PC 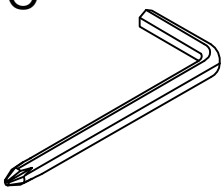 5/16 | Jx1 PC 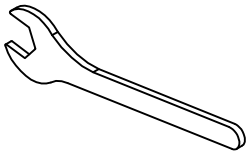 5/16 |
| Kx1 PC 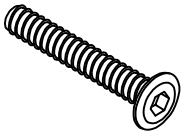 5/16X55mm | | |

## STEP 1

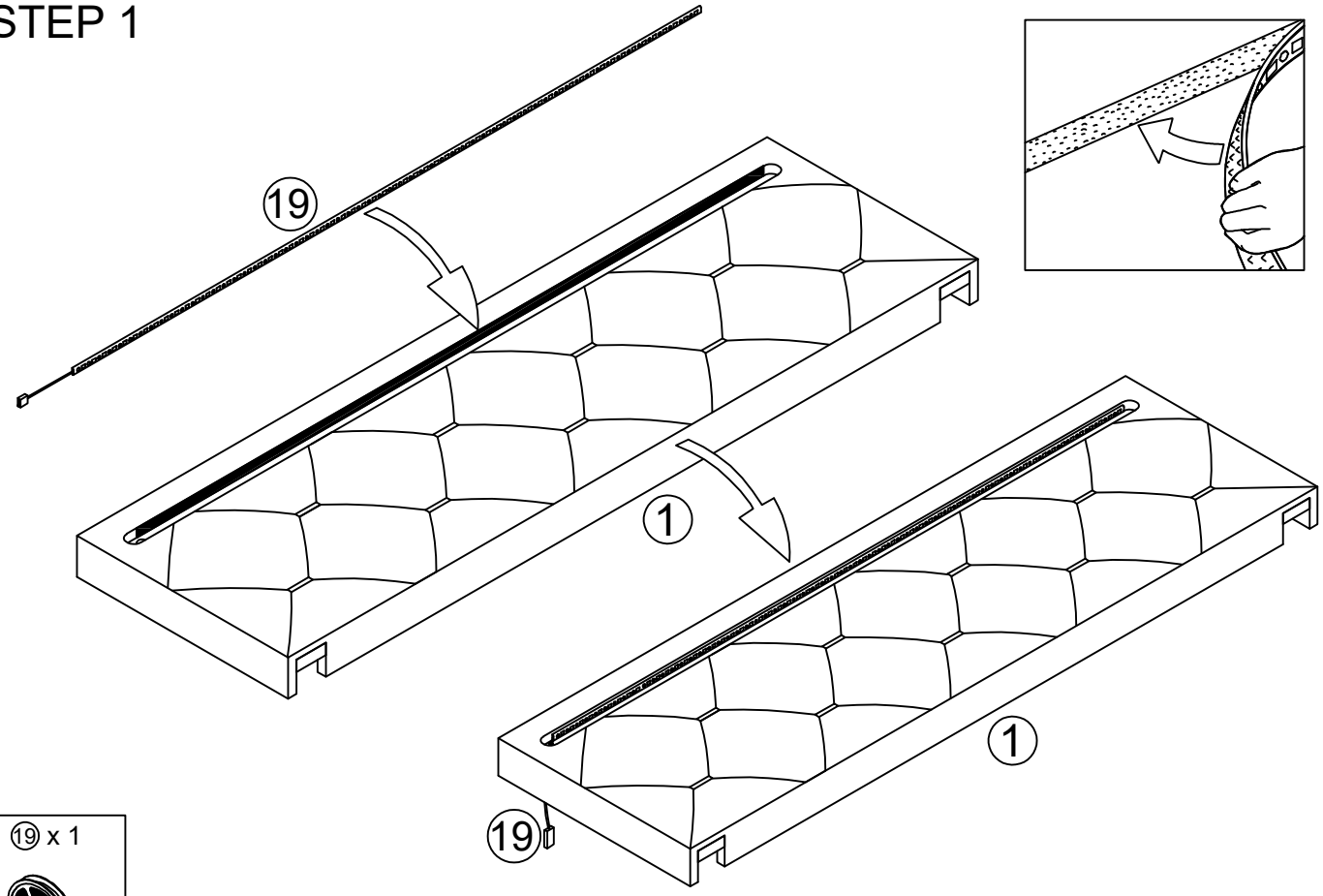




⑲ x 1



## STEP 2

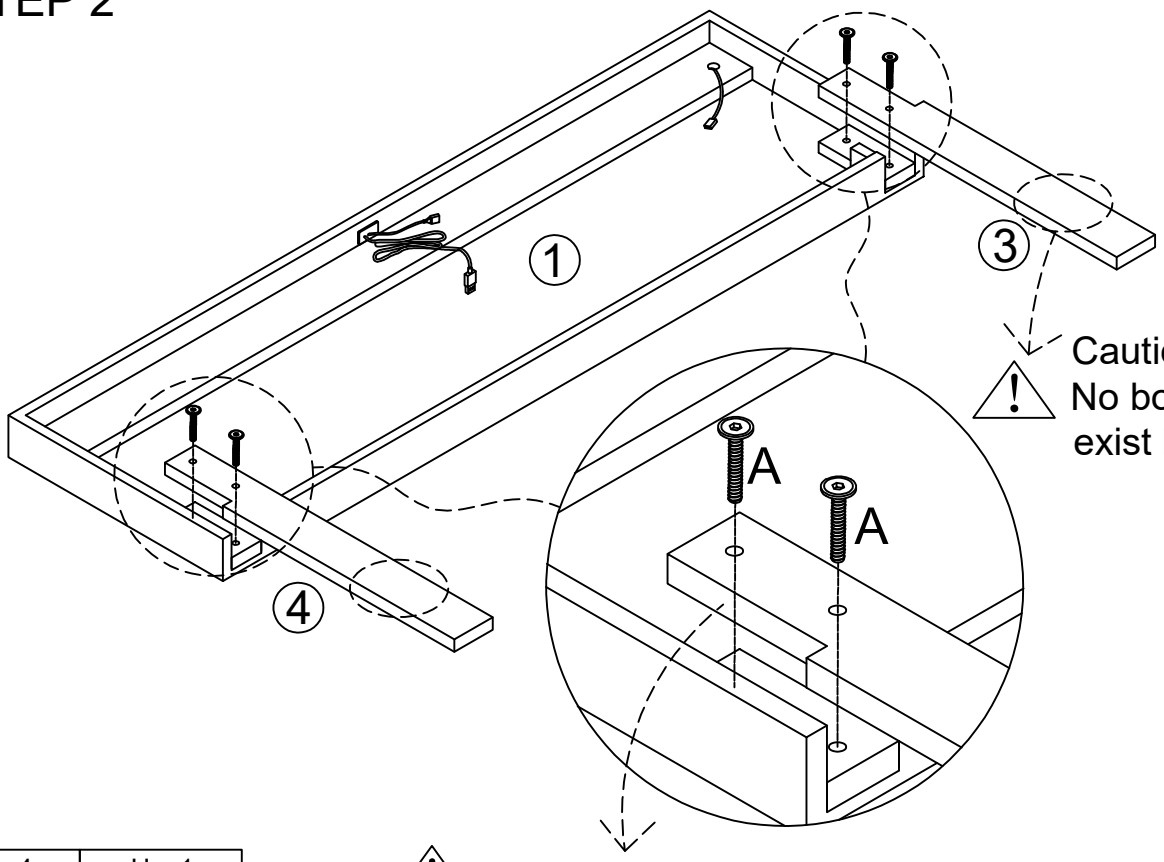


| A x 4 | H x 1 |
|---|---|
|  |  |
| 5/16X45mm | 5/16 |

## STEP 3

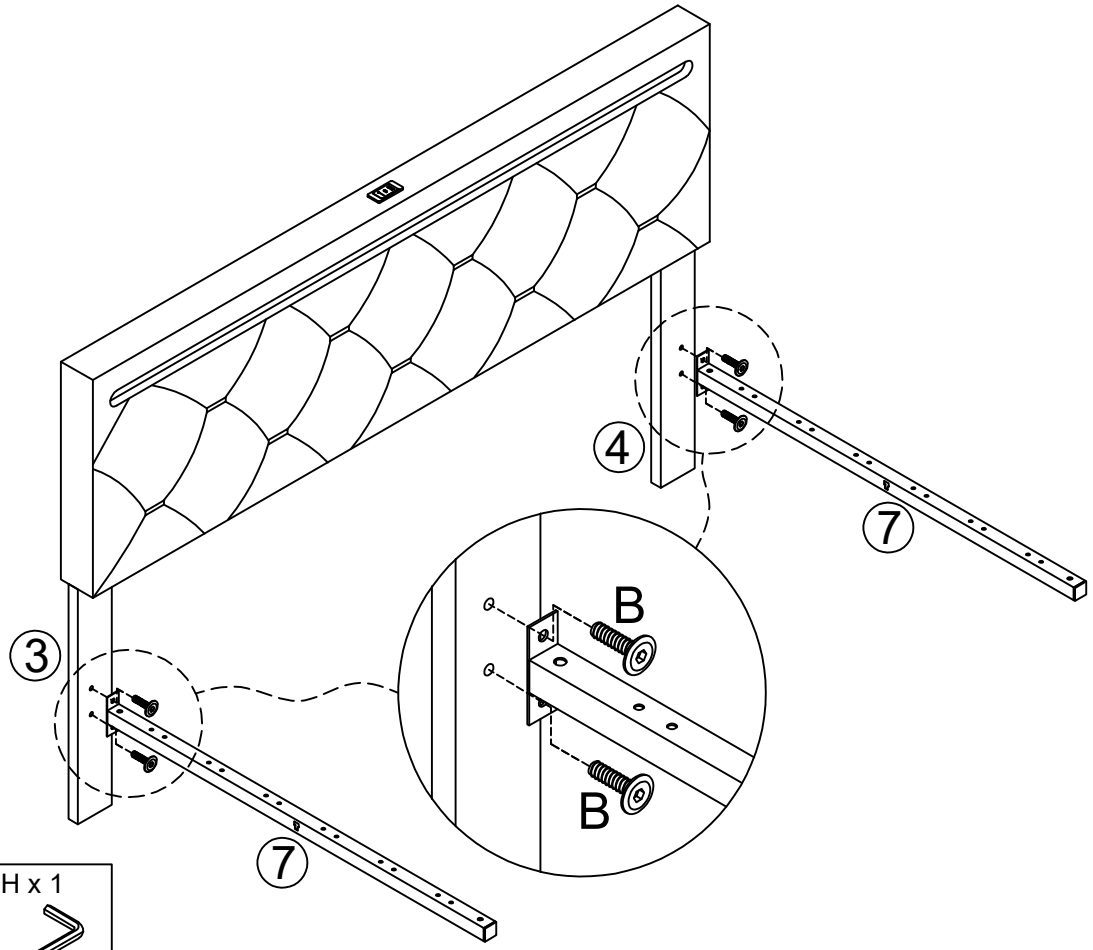


| B x 4 | H x 1 |
|---|---|
| 5/16X25mm | 5/16 |

## STEP 4

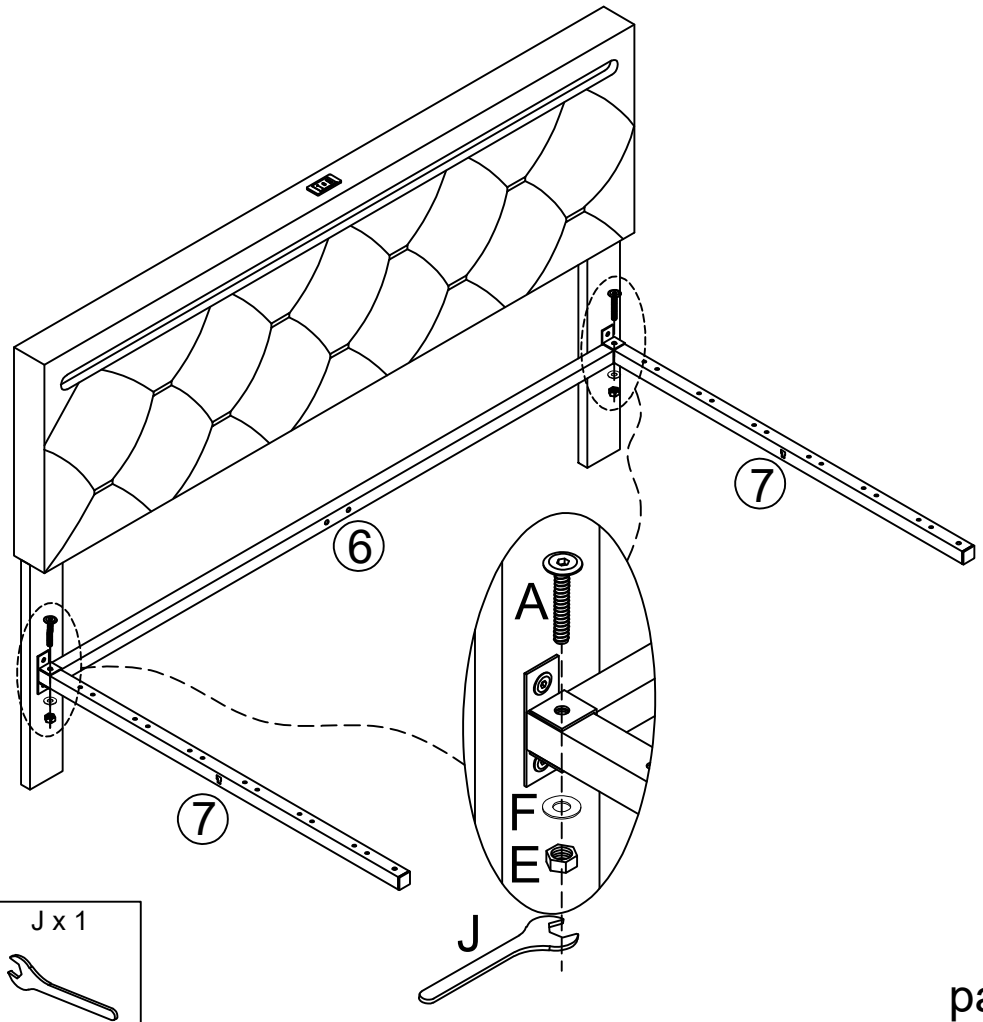


| A x 2 | E x 2 |
|---|---|
| 5/16X45mm | 5/16 |

| F x 2 | H x 1 | J x 1 |
|---|---|---|
| Ø19X5/16 | 5/16 | 5/16 |

## STEP 5

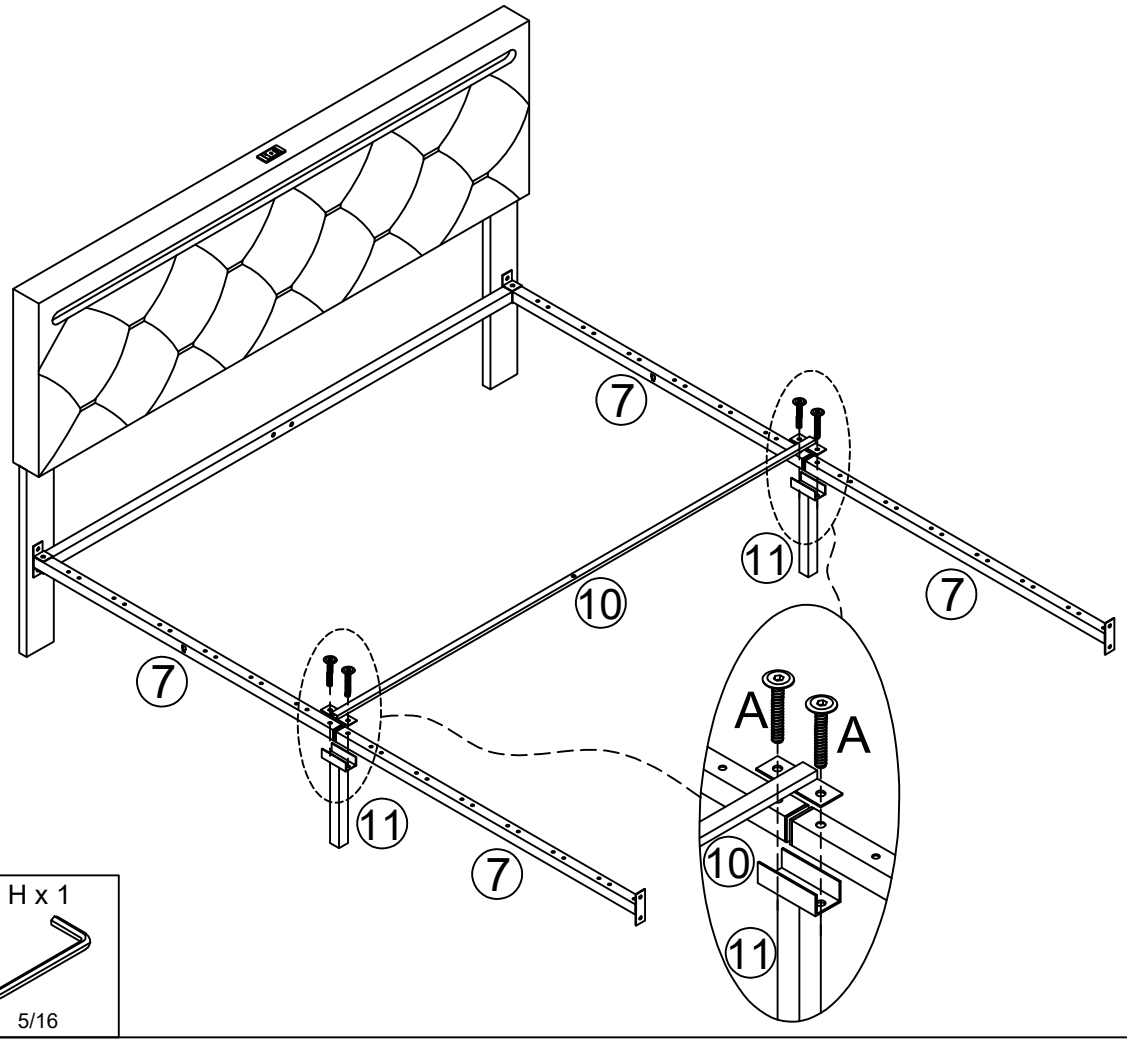


| A x 4 | H x 1 |
|---|---|
| 5/16X45mm | 5/16 |

## STEP 6

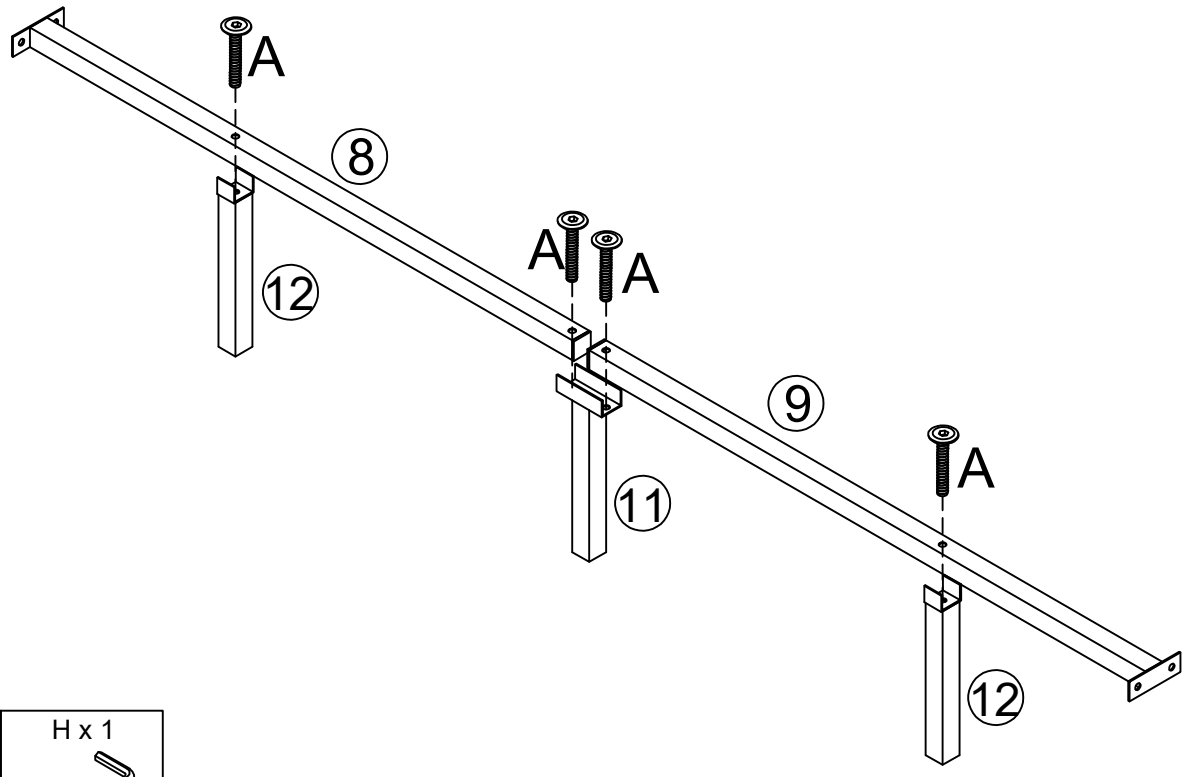


| A x 4 | H x 1 |
|---|---|
| 5/16X45mm | 5/16 |

## STEP 7

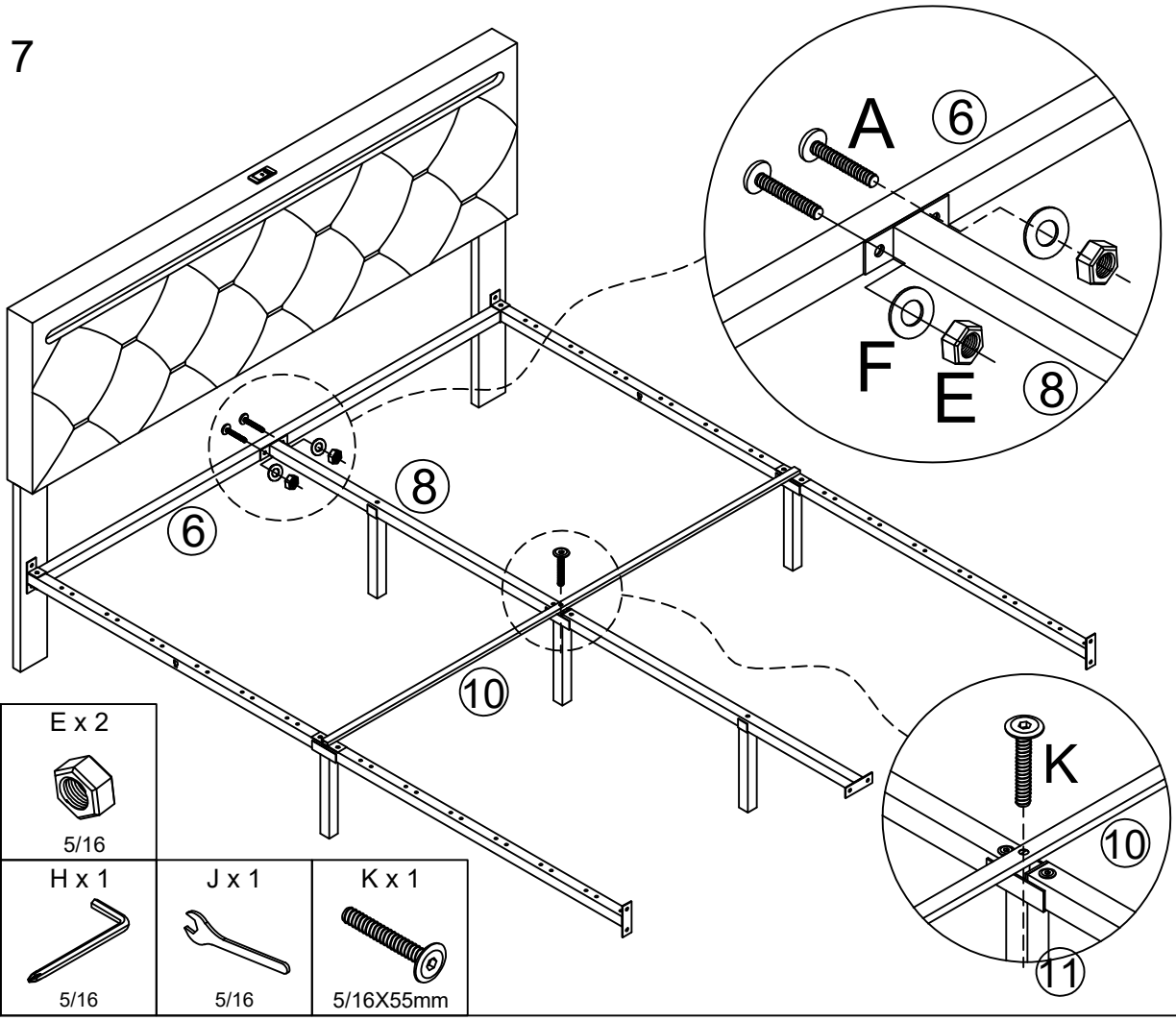


| A x 2 | E x 2 | F x 2 | H x 1 | J x 1 | K x 1 |
|---|---|---|---|---|---|
| 5/16X45mm | 5/16 | Ø19X5/16 | 5/16 | 5/16 | 5/16X55mm |

## STEP 8

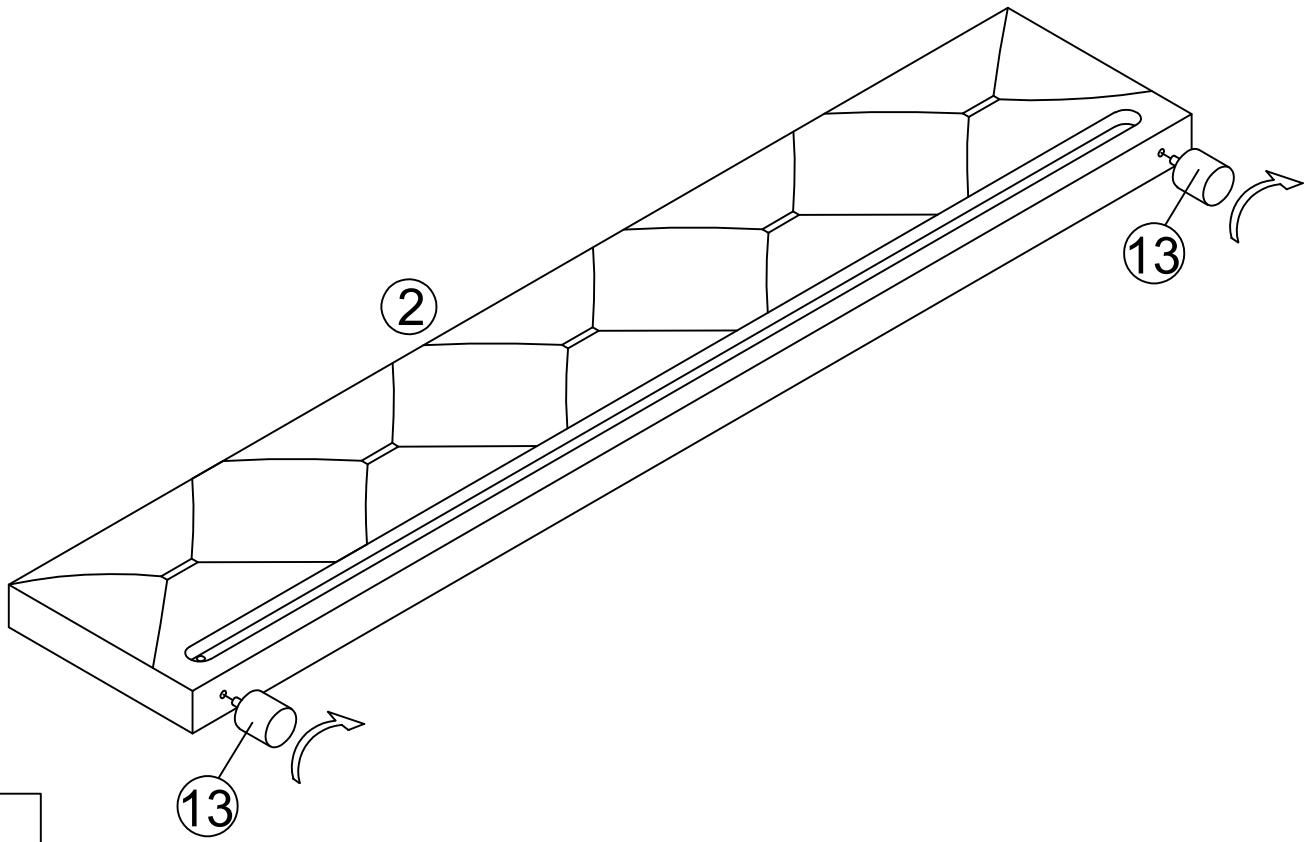


⑬ x2

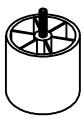

## STEP 9

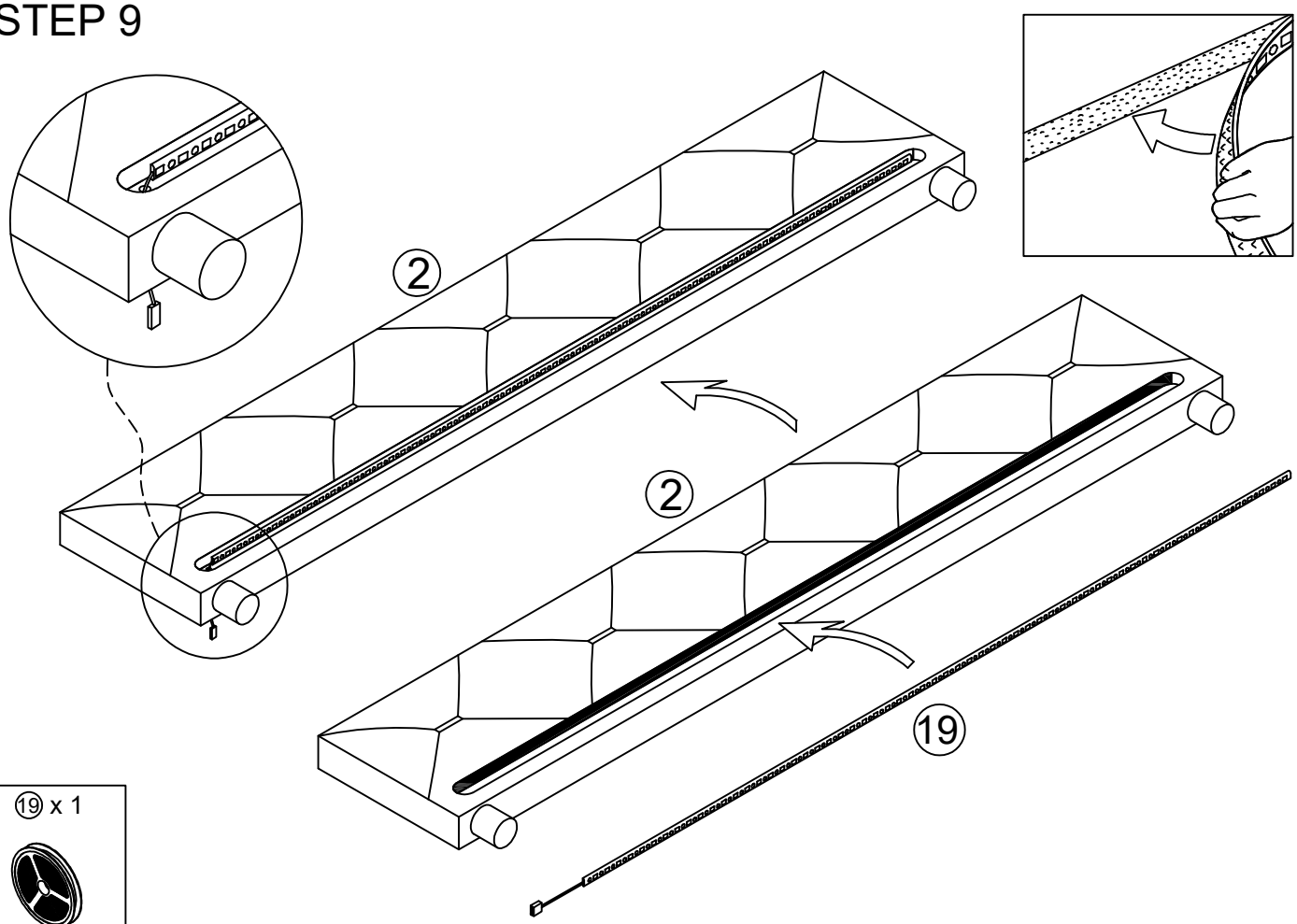


⑲ x 1



## STEP 10

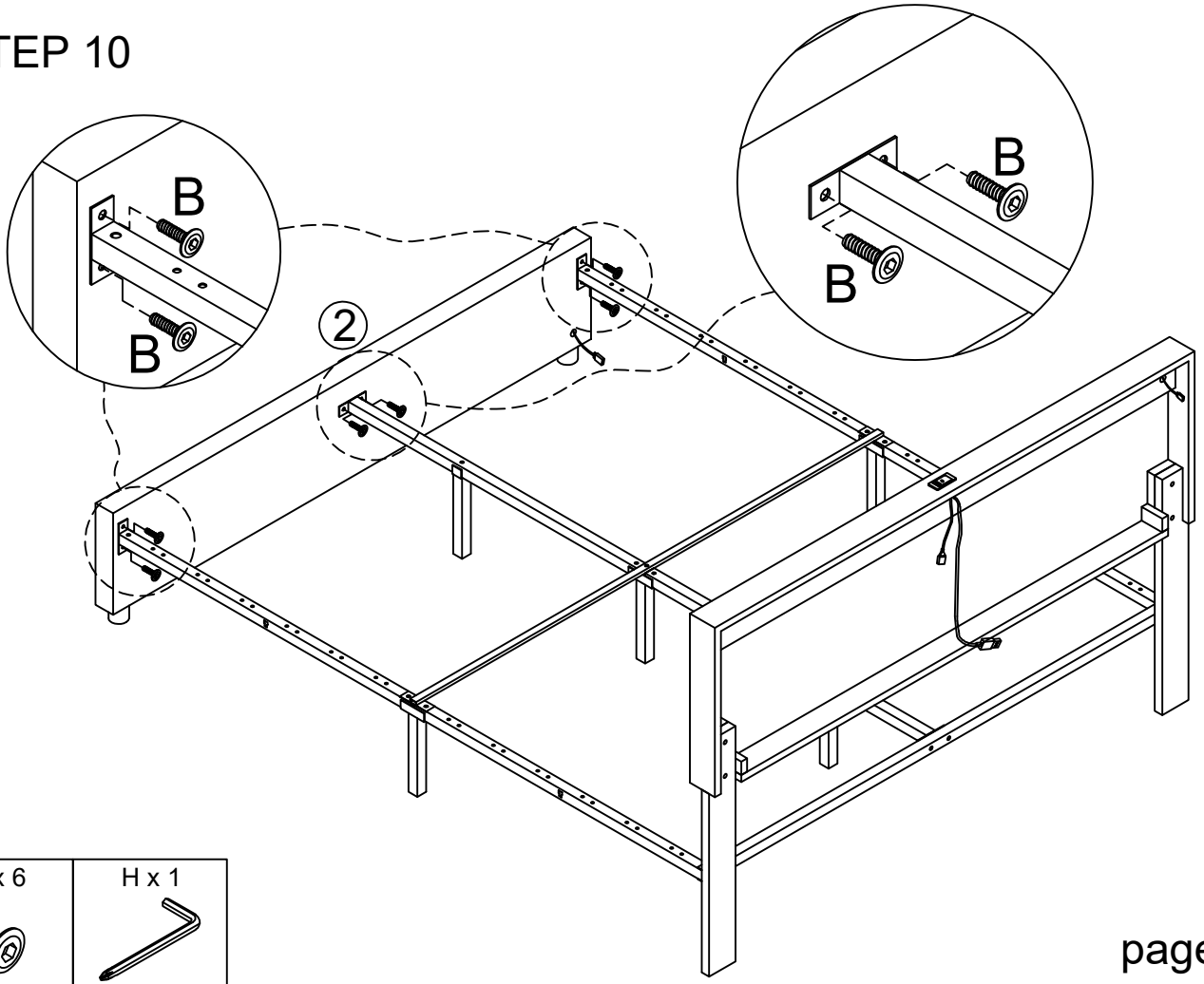


| B x 6 | H x 1 |
| --- | --- |
|  |  |
| 5/16X25mm | 5/16 |

## STEP 11

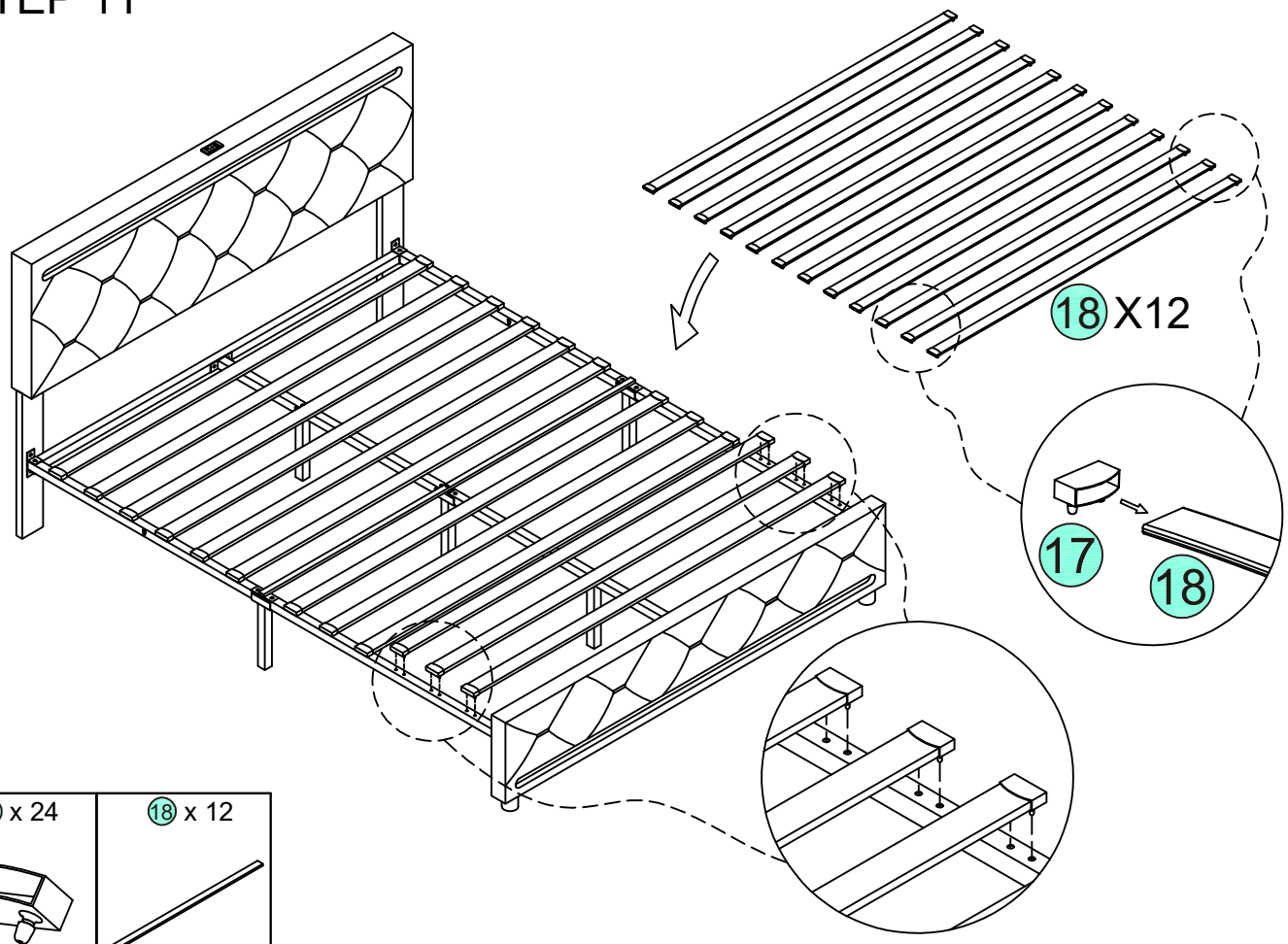


| 17 x 24 | 18 x 12 |
|---|---|
|  |  |

## STEP 12

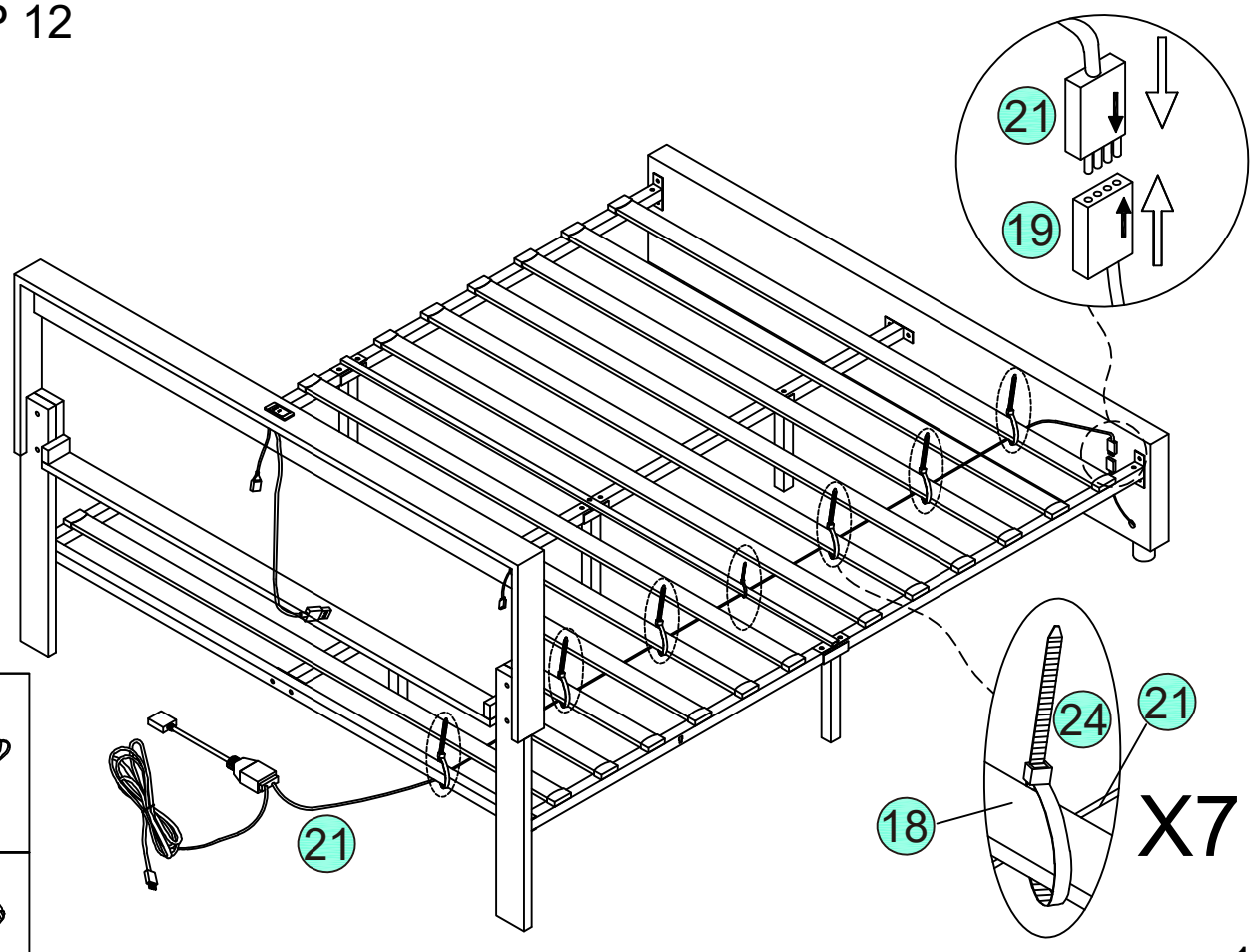


| 21 x 1 | 24 x 7 |
|---|---|
|  | 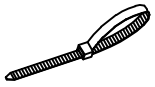 |

## STEP 13

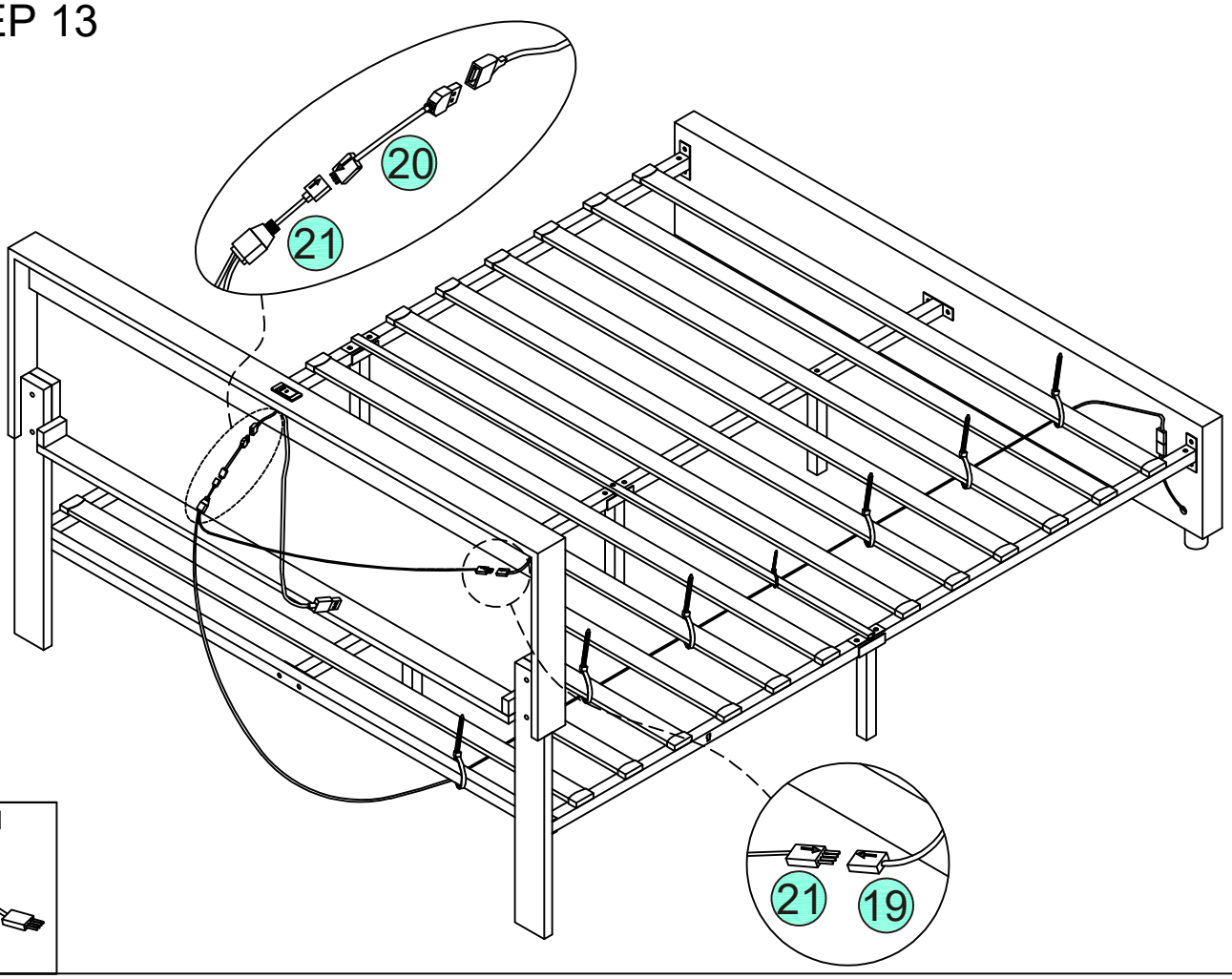


20 x 1



## STEP 14

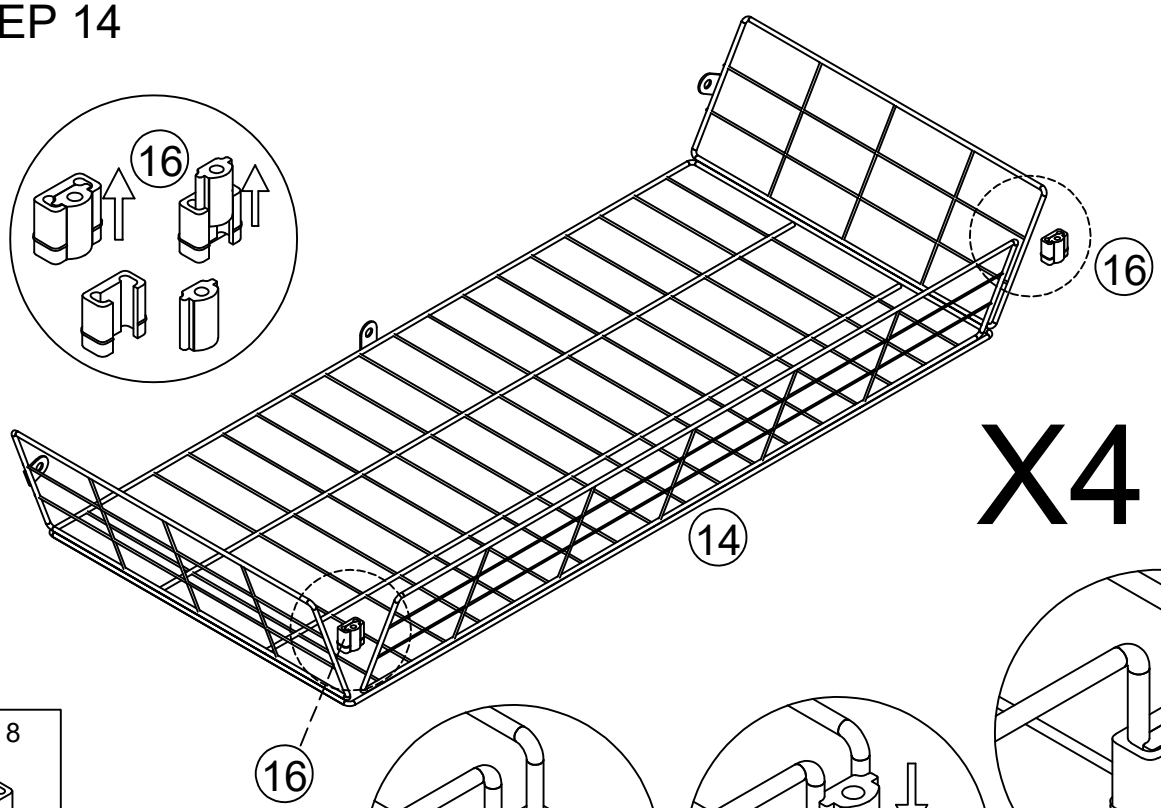


16 x 8

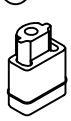

14 x 4

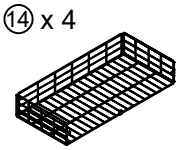

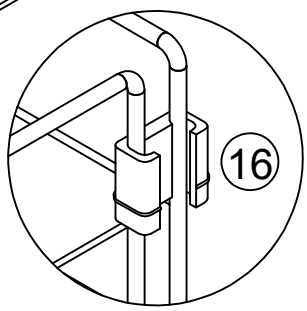


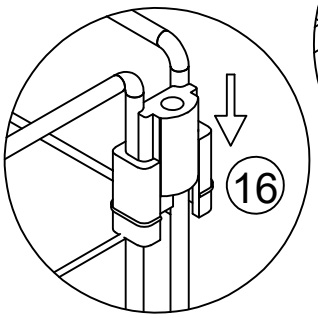


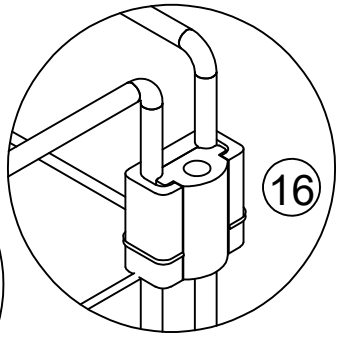

## STEP 15

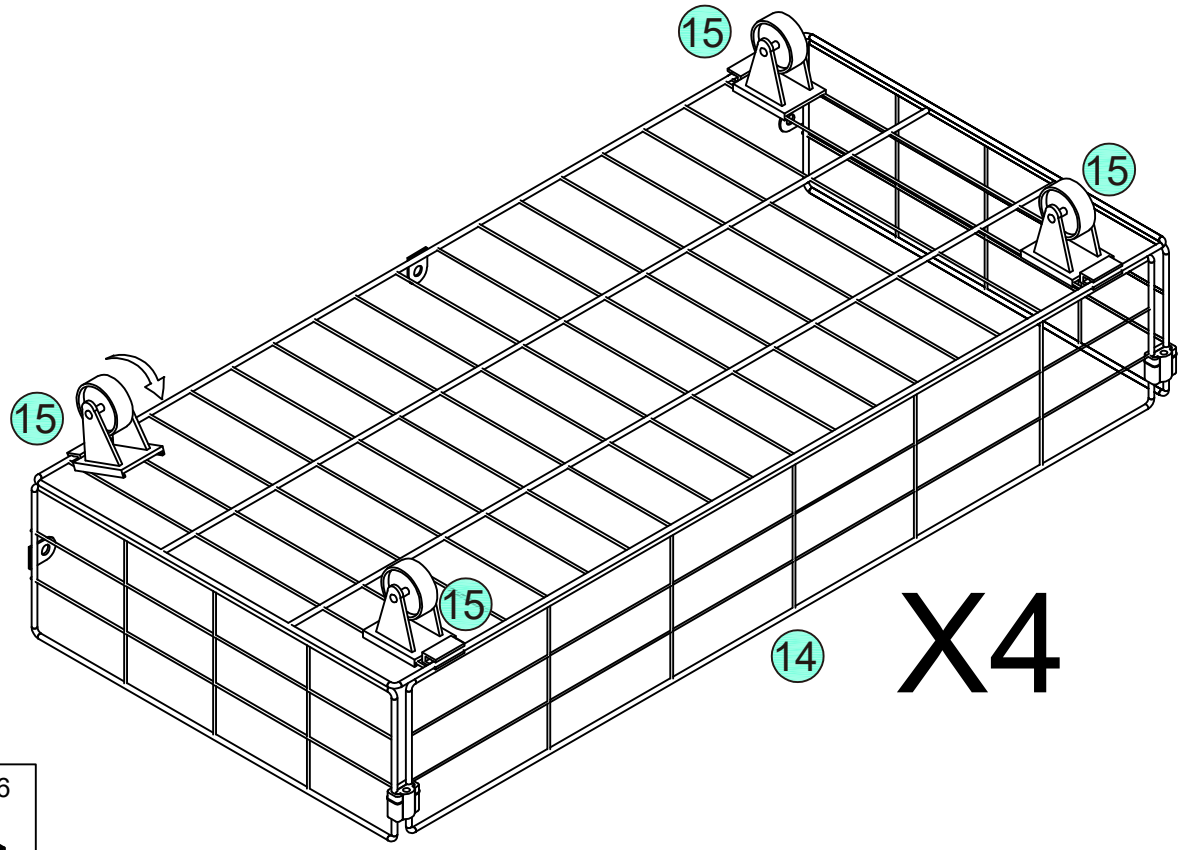


| ⑮ x 16 |
|---|
|  |

## STEP 16

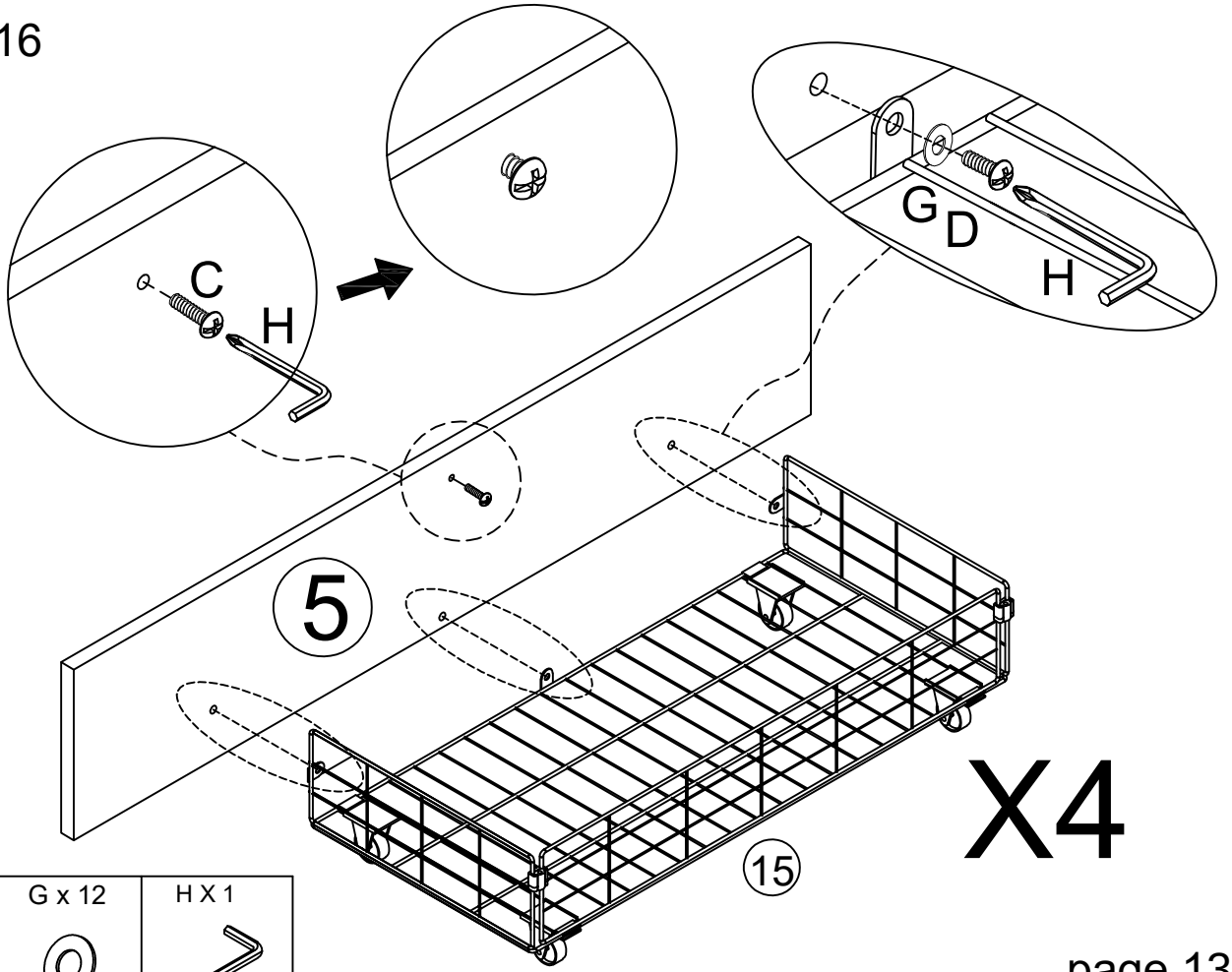


| C x 4 | D x 12 | G x 12 | H X 1 |
|---|---|---|---|
|  |  |  |  |
| 1/4X20mm | 1/4X15mm | Ø16X1/4 | 5/16 |

## STEP 17

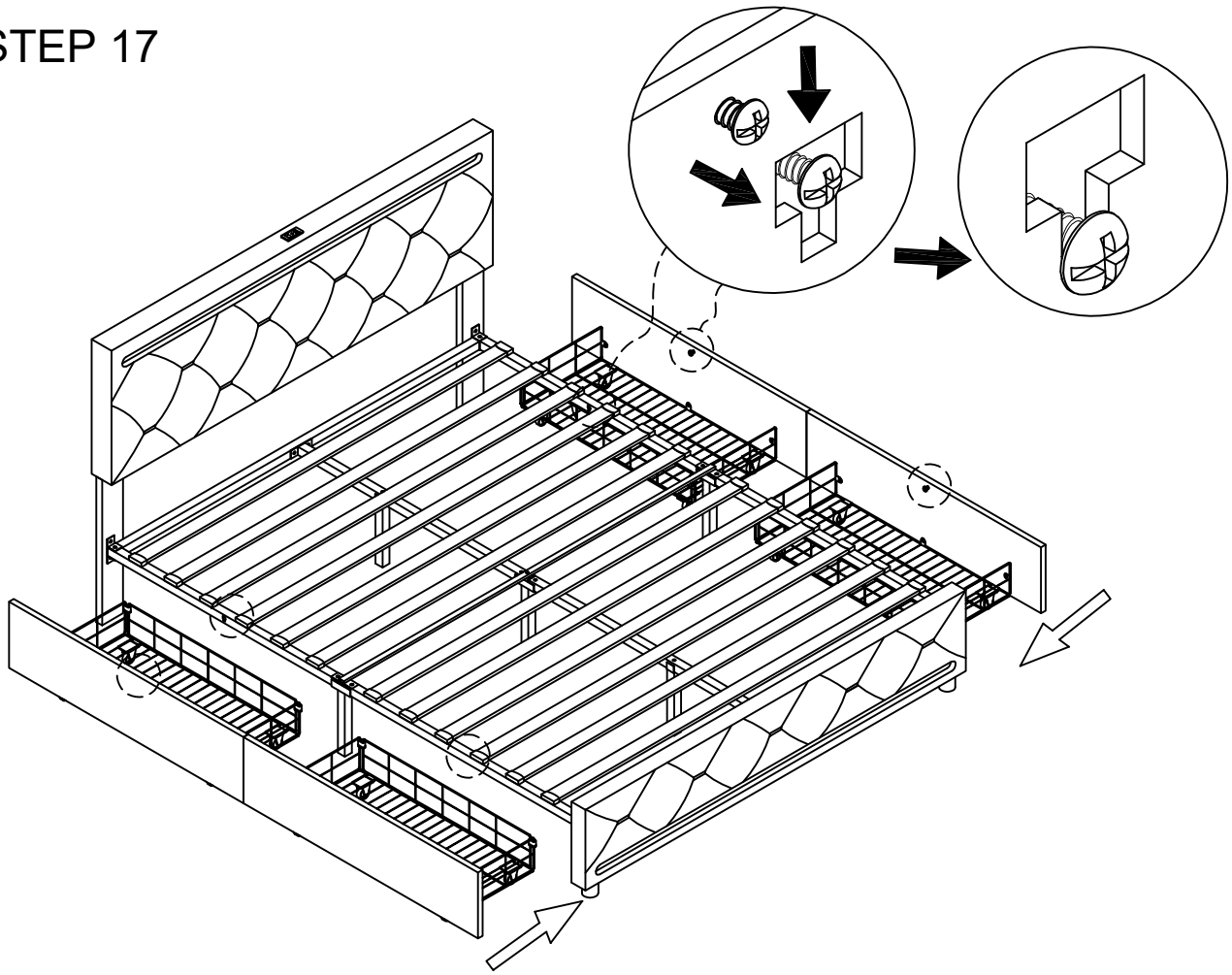

## STEP 18

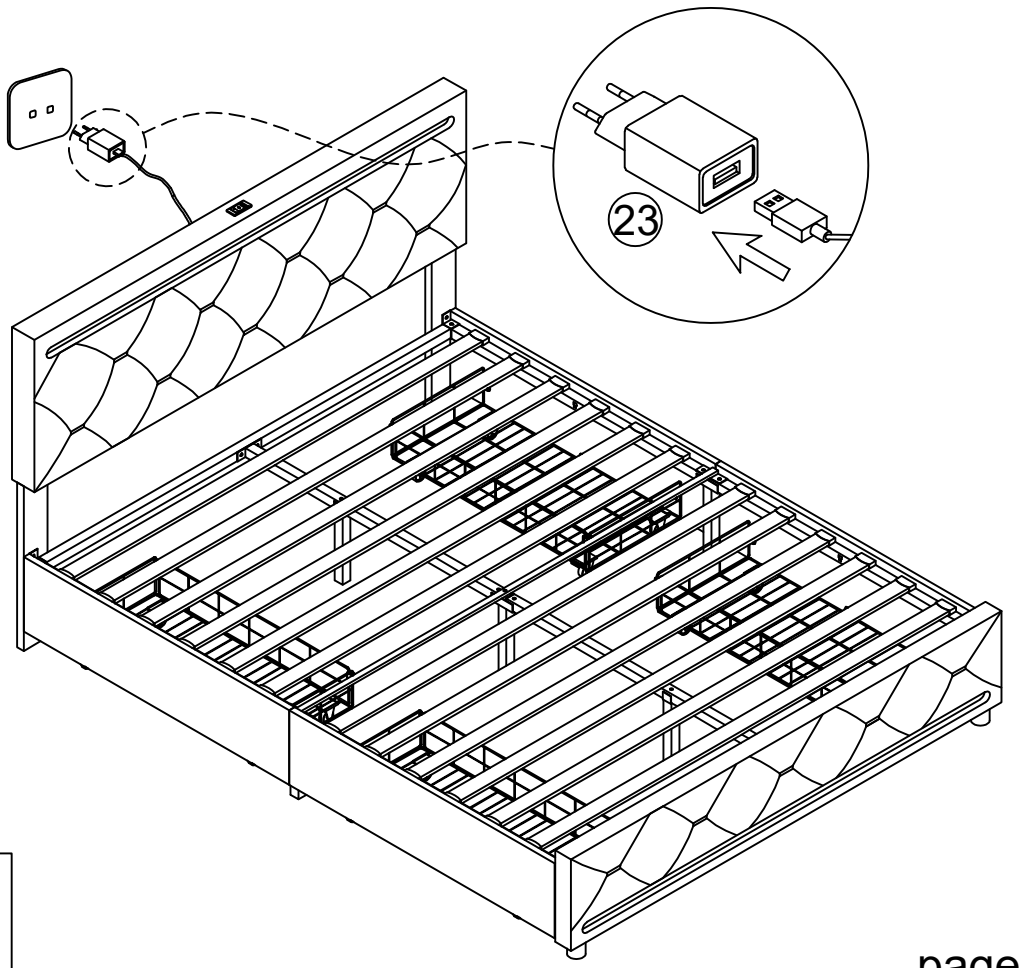


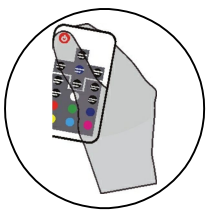

| ㉒ x 1 | ㉓ x 1 |
| --- | --- |
| 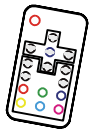 | 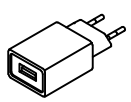 |