Assembly and Installation Guide

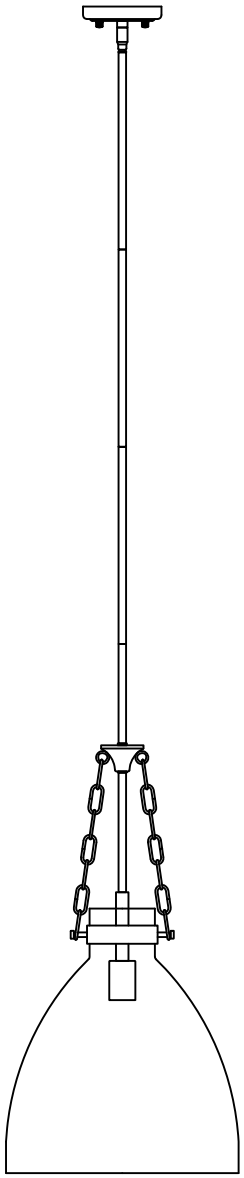

IMPORTANT:

Please read carefully and save these instructions, as you may need them at a later date. When using electrical equipment, basic safety precautions should always be followed as below:

1.The lamps are recommended to be in stalled by authorized and qualified technicians in accordance with valid electrical installation regulations.

2.The manufacturer does not accept any responsibility for injuries or damageresulting from improper use of the light.

3.Attention! Before starting the installation work, make sure that the mains power line is voltage-free-turn off safety cutout or unscrew the protection fuse. The switch must be "OFF".

4.Warning! Before drilling the mounting holes, make sure that no gas, water or electricity pipes and wires can be drilled through or damaged in your chosen mounting location.

5.No user serviceable parts inside.

6.Place the device out of reach from children under 3 years old.

7.Riskof of electrice shock-do not use where directly exposed to water.

8.Description of the supply terminals: L=Phase N=Neutral condutor ⏚ =Earthed conductor

Last updated: 06/18/2026

Installation Instruction

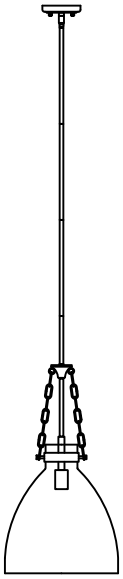

LIGHTING SOURCE	x1 E26 MAX. 60W	INCLUDED	
		NOTINCLUDED	✓
Mounting plate Mounting screws	x1 x2	INCLUDED	✓
		NOTINCLUDED	
Plastic wire connector Roof cover	x3 x1	INCLUDED	✓
		NOTINCLUDED	
Screw/ circular tube/ Threaded iron particles	x3	INCLUDED	✓
		NOTINCLUDED	
Mounting plate nut Connecting rod Iron ring	x2 x4 x1	INCLUDED	✓
		NOTINCLUDED	

1

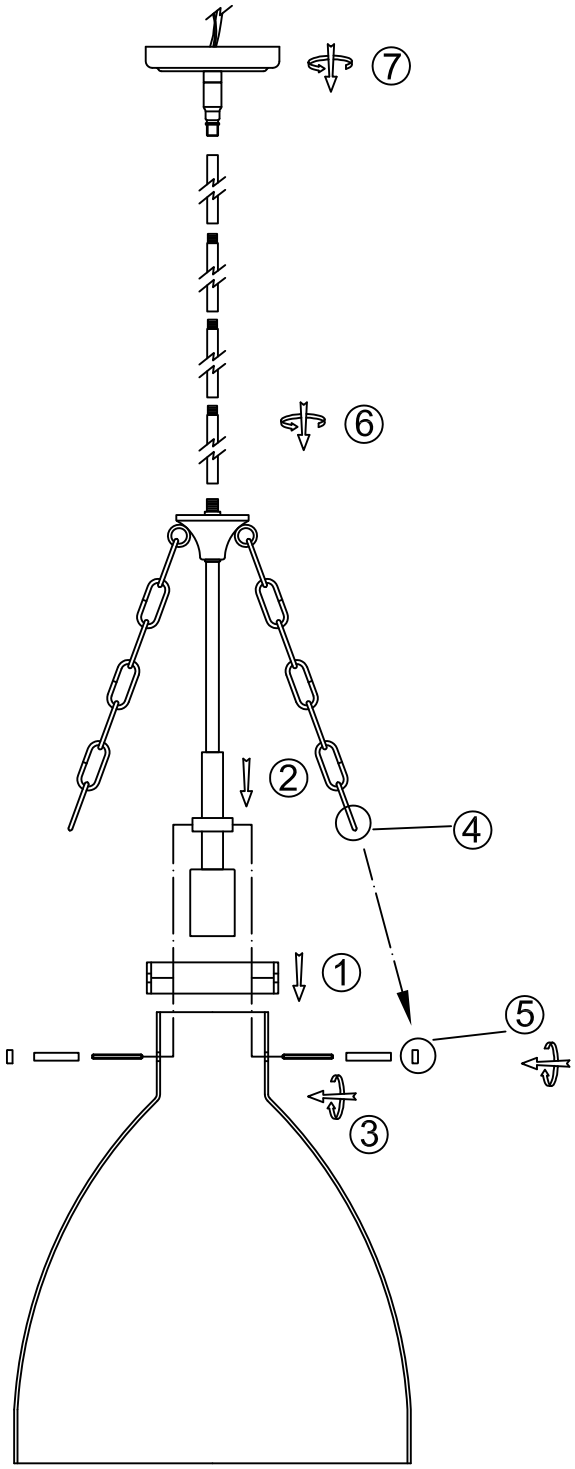

2

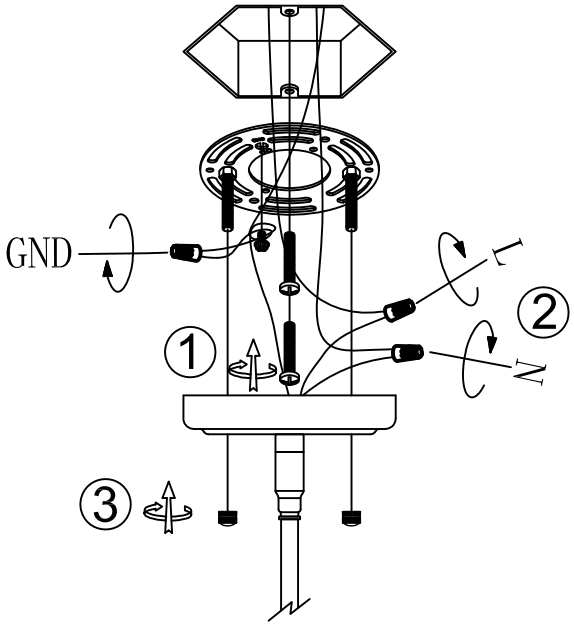

3

