ASSEMBLY INSTRUCTION
30INCH BATH VANTINY (COMBO)

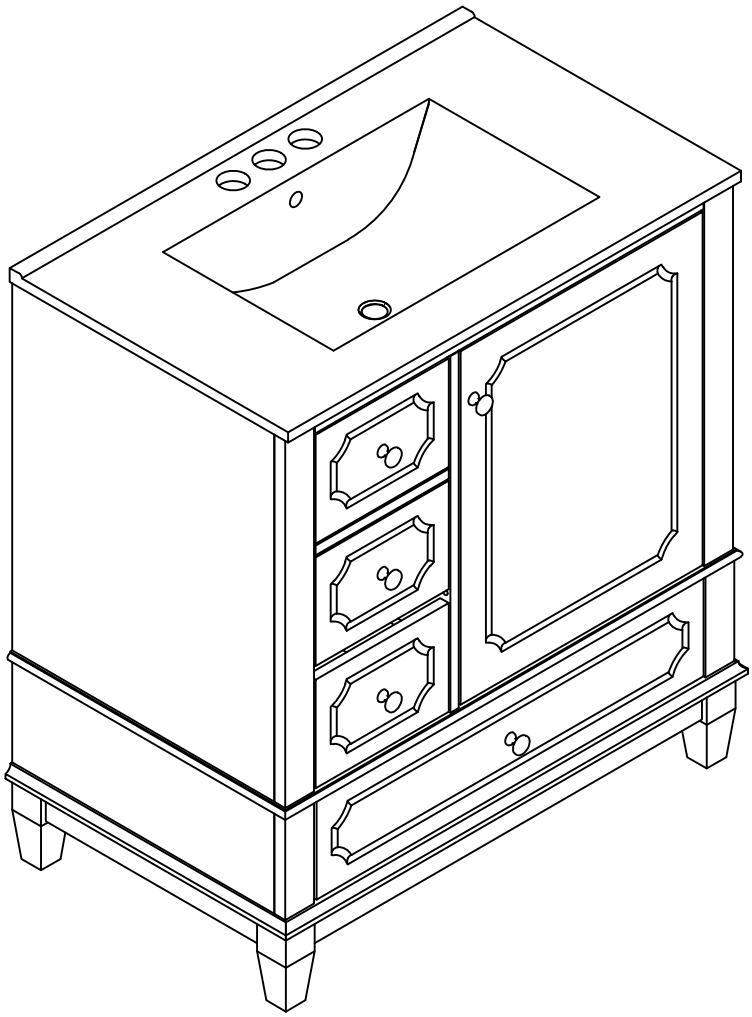

Thank you for purchasing this quality product. Be sure to check all pac material carefully for small parts which may have come loose inside the carton during shipment. Separate, identify and count all parts and hardware. Compare with the parts list to be sure all parts are present.
"DO NOT TIGHTEN SCREWS UNTIL COMPLETELY ASSEMBLED"

* Use of power tool to assemble this product will invalidate any claim and damage this product making unsafe!!!
* Please assemble on a clean soft surface to avoid damage.



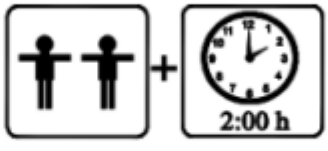

Tools Required

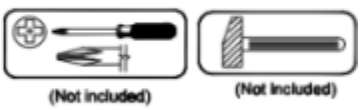

IMPORTANT:
PLEASE READ INSTRUCTION BEFORE STARTING THE ASSEMBLY

Thank you for buying our products.

Please read the installation manual carefully before installation,

we need you to follow the instructions on the accessories and hardware

step by step assembly complete, our instructions are very detailed.

Products are environmentally friendly products,

Please rest assured that you do not soak in water, do not place very heavy items,

do not malicious push and pull,

if you have any problems in the process of assembly and use, please contact us.

Thank you again for your purchase of our products,

I wish you a happy life.

Before Installation

Important - Please read these instructions fully before starting assembly

Thank you for purchasing this quality product. Be sure to check all packing materials carefully for small parts, which may have come loose inside the carton during shipment. Identify and count all items according to the PARTS LIST and/or HARDWARE LIST shown below. Check you have all the components and tools listed on the following pages.

. We recommend that you assemble this product with the assistance of another person; this will make the assembly easier, and will help eliminate damage to the product or injury to persons during assembly.

. Please do not over tighten screws or bolts until the assembly is completed.

. Keep children and animal away from the work area, small parts could choke if swallowed.

. Please put all parts on a non-abrasive floor before assembly,and follow the assembly steps to assemble your newly purchased product correctly and efficently.

If you find that you have any trouble with assembly or missing or damaged parts please contact the seller.

Cam Lock Assembly Instructions

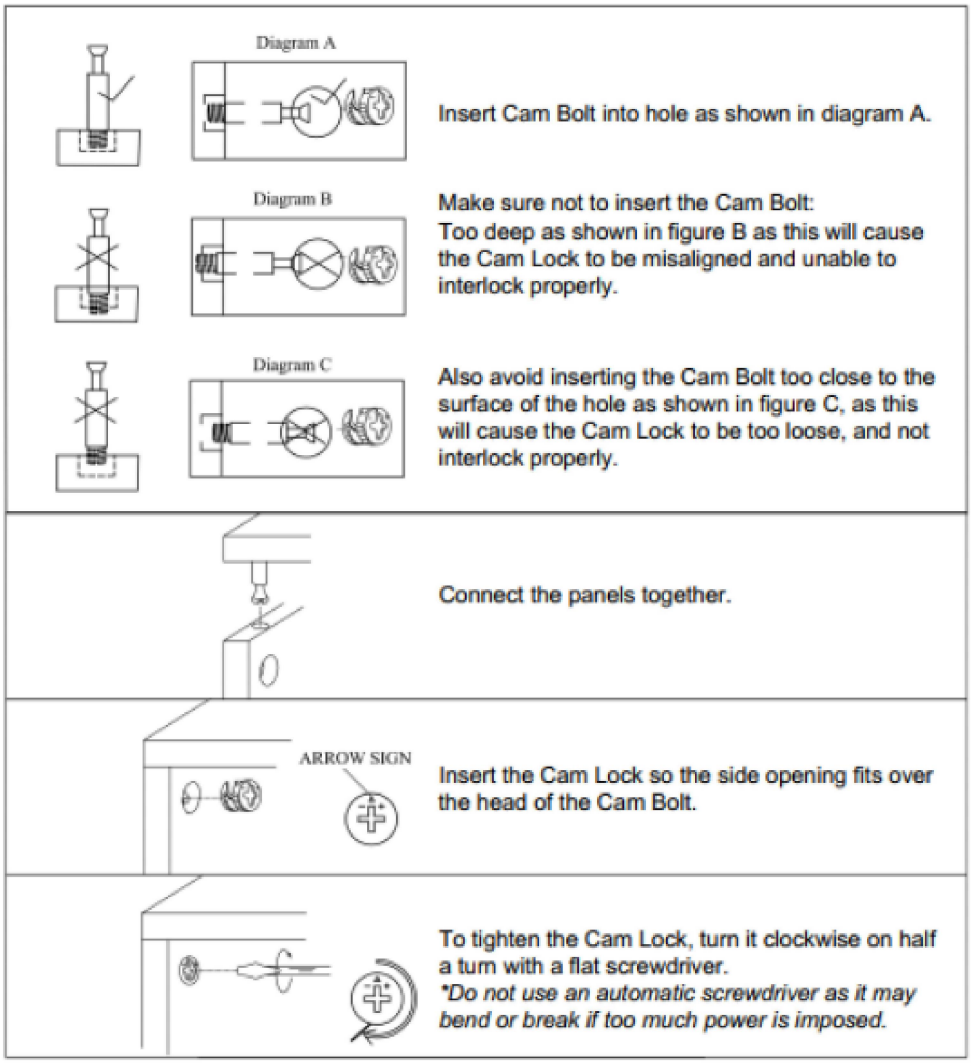

Detail View - CABINET

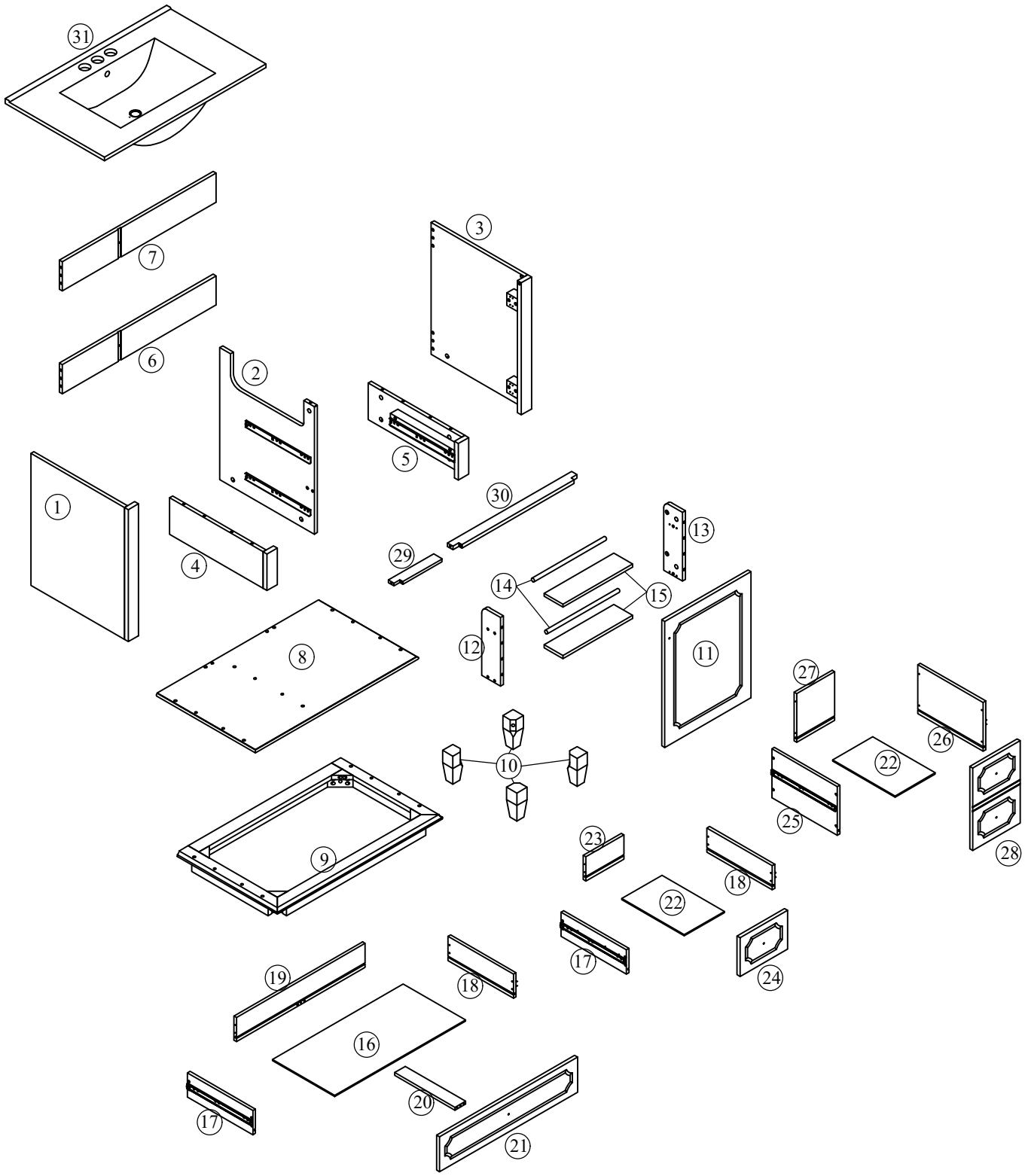

Identifying the Hardware -Indentify the hardware using the illustrations below.

Part List

1 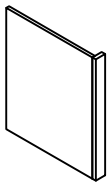 Top Side Panel (L) - 1pc	2 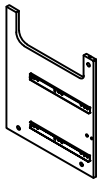 Mid Panel - 1pc
3 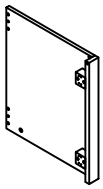 Top Side Panel (R) - 1pc	4 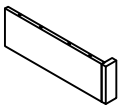 Bottom Side Panel (L) - 1pc
5 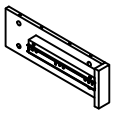 Bottom Side Panel (R) - 1pc	6 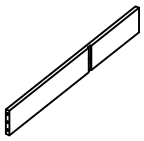 Bottom Panel Rear - 1pc
7 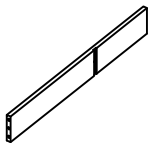 Top Panel Rear - 1pc	8 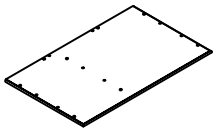 Mid Panel - 1pc
9 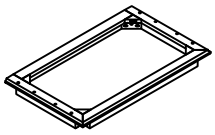 Base Frame - 1pc	10 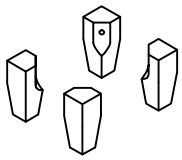 Cabinet Feet - 4pcs
11 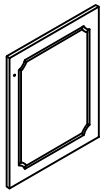 Cabinet Door - 1pc	12 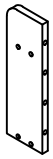 Door side panel(L) - 1pc
13 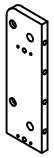 Door side panel(R) - 1pc	14 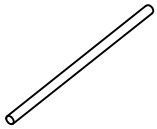 Round Bar - 2pc

Part List

15 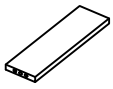 Door shelf panel - 2pc	16 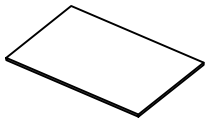 Bottom Panel (Bottom Drawer) - 1pc
17 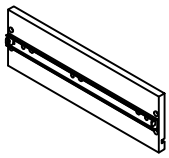 Drawer Side Panel (L) (Bottom & Mid Drawer) - 2pcs	18 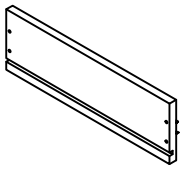 Drawer Side Panel (R) (Bottom & Mid Drawer) - 2pcs
19  Back Panel (Bottom Drawer) - 1pc	20 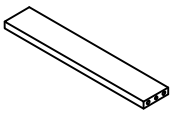 Support Bar (Bottom Drawer) - 1pc
21 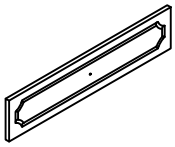 Bottom Drawer Face - 1pc	22 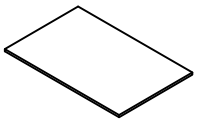 Bottom Panel (Top & Mid Drawer) - 2pcs
23 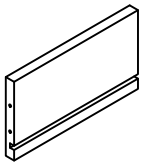 Back Panel (Mid Drawer) - 1pc	24 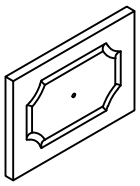 Mid Drawer Face - 1pc
25 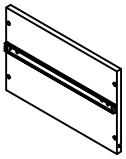 Side Panel (L) (Top Drawer) - 1pc	26 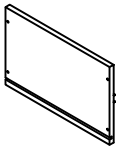 Side Panel (R) (Top Drawer) - 1pc
27 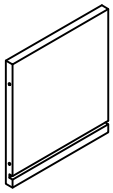 Back Panel (Top Drawer) - 1pc	28 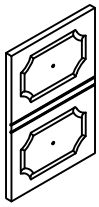 Top Drawer Face - 1pc

Part List

29 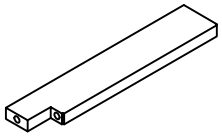 Crossbar Front - 1pc	30 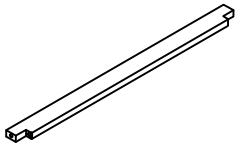 Front Top Bar - 1pc
31 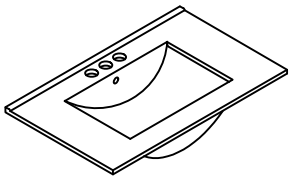 Sink - 1pc	

Hardware List

A 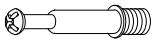 ø6x35mm	B  ø14.5x12mm	C  ø8xø4x32mm
Three in one bolts - 37pcs	Three in one lock - 37pcs	Round head screw - 25pcs
D  ø8xø4x25mm	E  ø13x1/4"x40mm	F  ø1/4"x16x1mm
Round head screw - 3pcs	Hex-Head bolts - 4pcs	Washer - 4pcs
G  4mm	H  ø25x25mm	I 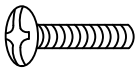 ø5/32"x19mm
Allen key - 1pc	Handle - 5pcs	Handle screw - 2pcs
J 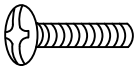 ø5/32"x32mm	K 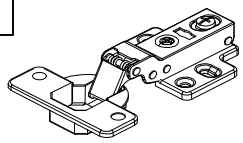	L 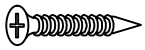 ø7xø3.5x15mm
Handle screw - 3pcs	Damping hinge - 2pcs	Flat head screw - 12pcs
M 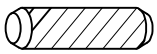 ø8x30mm	N 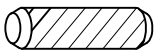 ø6x30mm	O 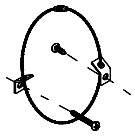
Wood dowel - 36pcs	Wood dowel - 20pcs	Anti fall hardware (2sets)

STEP: 1

A	E	F	M
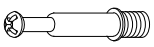			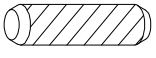
4PCS	4PCS	4PCS	4PCS

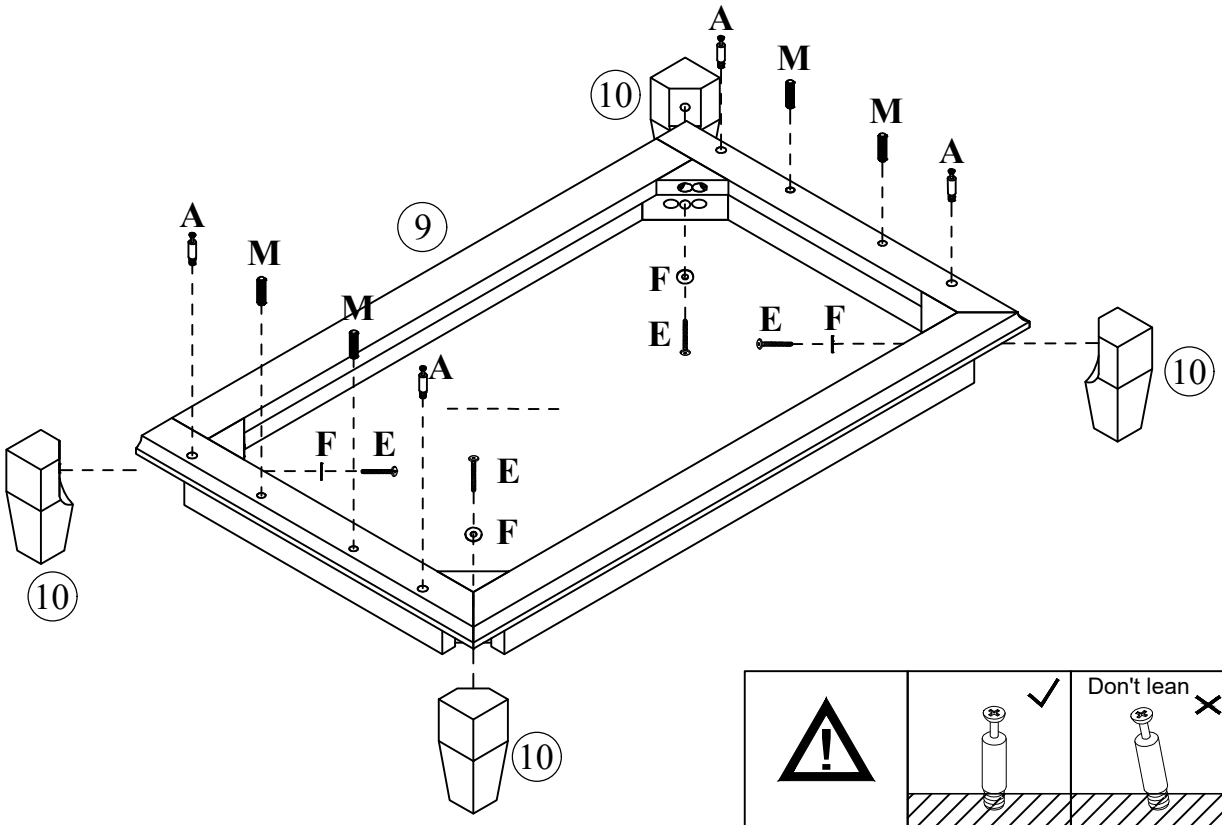

STEP: 2

B

4PCS

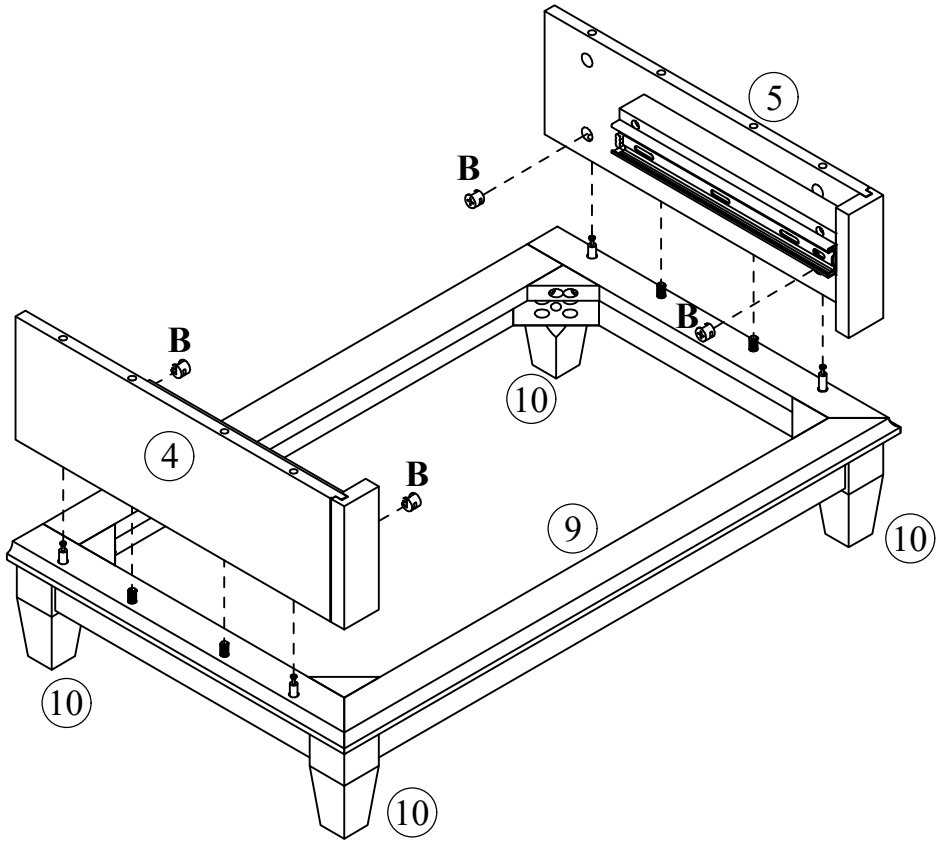

STEP: 3

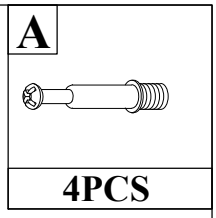
A
4PCS

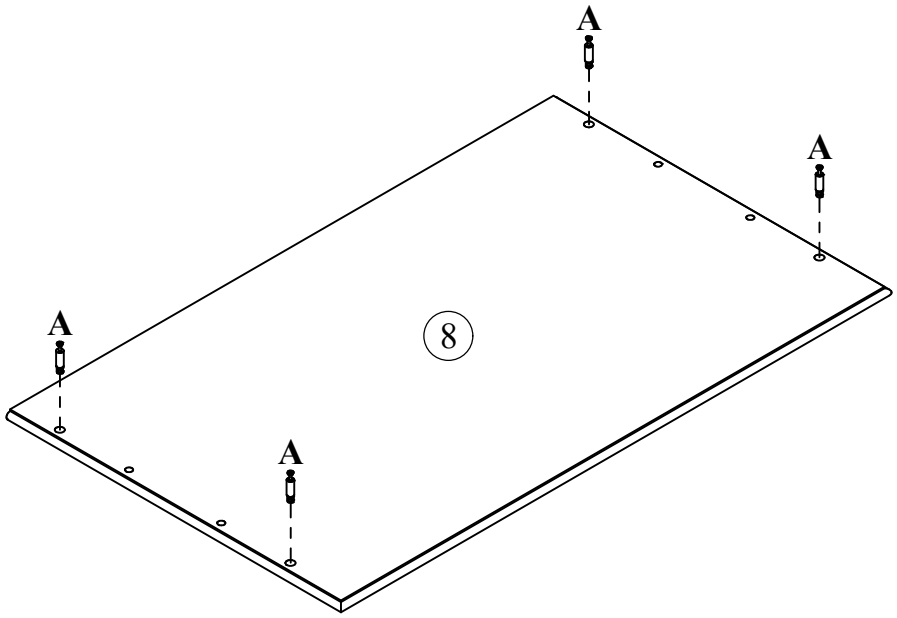
A
A
A
A
8

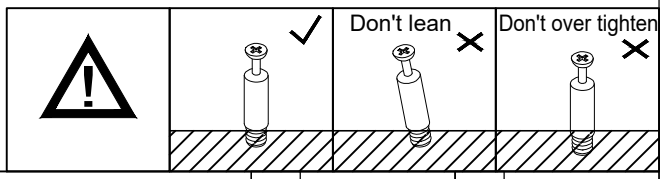
Don't lean
Don't over tighten

STEP: 4

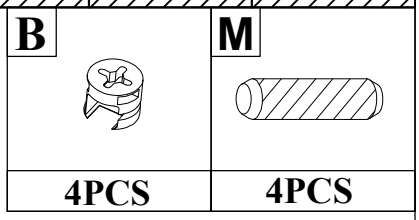
B
4PCS
M
4PCS

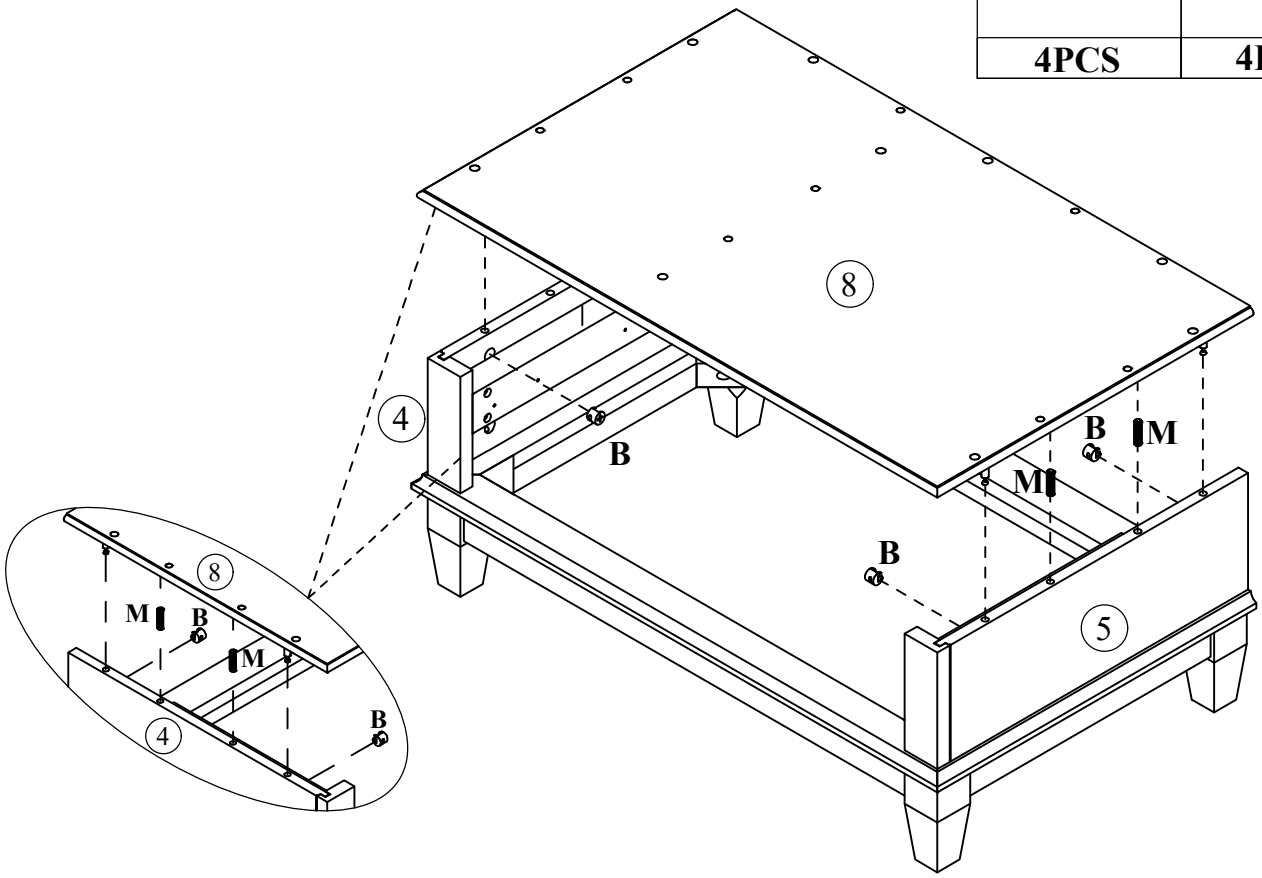
8
4
B
B
M
M
B
5
8
M
B
M
4
B

STEP: 5

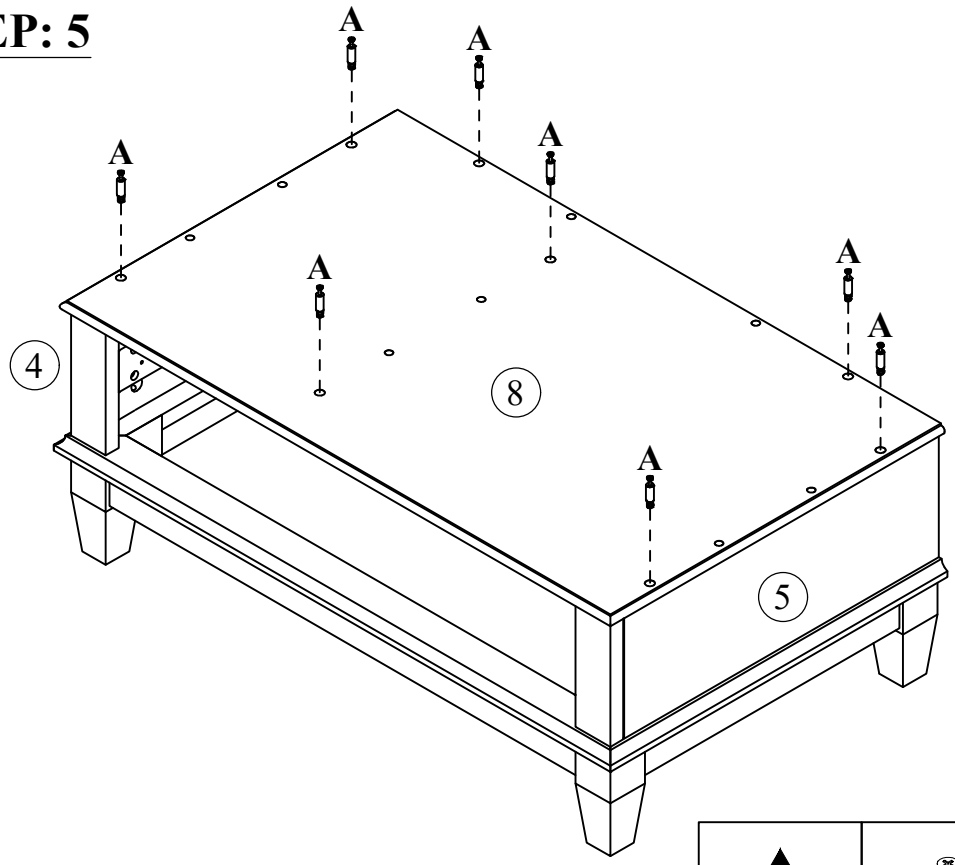
A
A
A
A
A
A
A
A
4
8
5

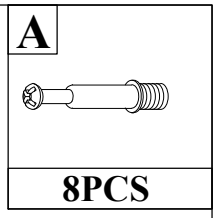
A
8PCS

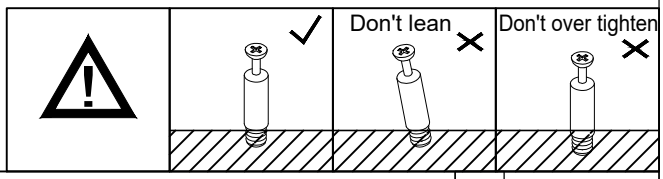
Don't lean
Don't over tighten

STEP: 6

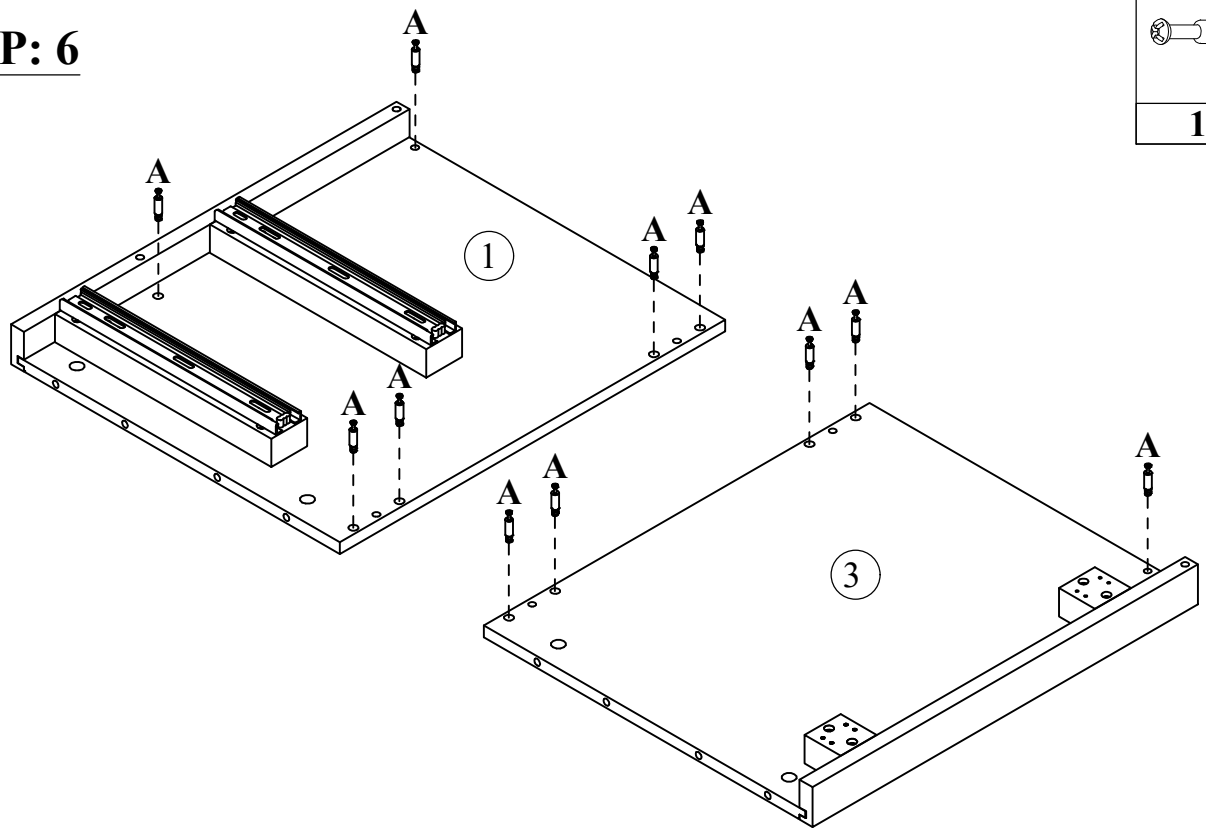
A
A
A
A
A
A
A
A
A
A
A
A
A
A
1
3

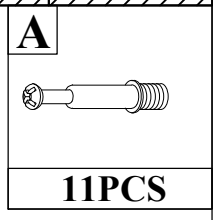
A
11PCS

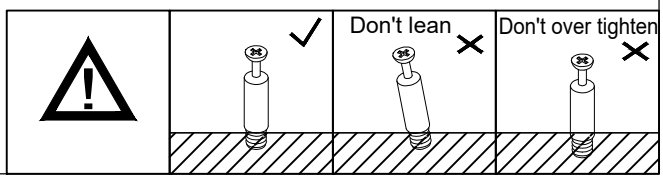
Don't lean
Don't over tighten

STEP: 7

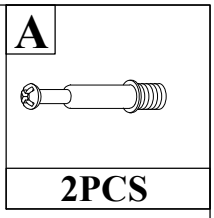
A
2PCS

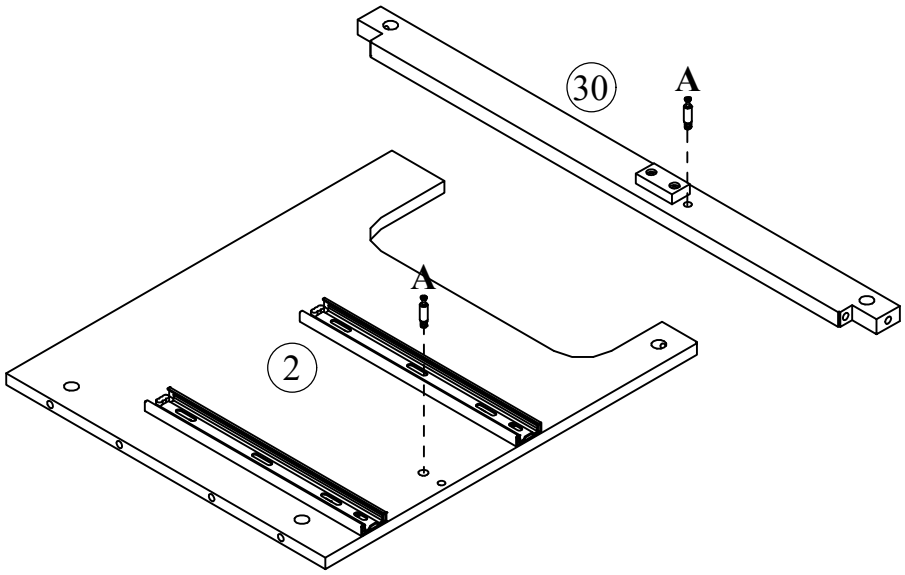
30
A
A
2

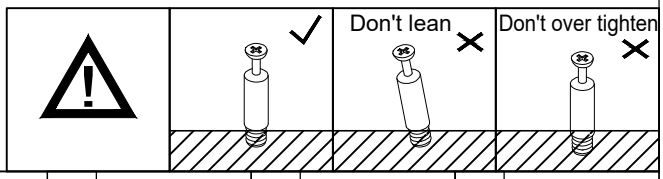
Don't lean
Don't over tighten

STEP: 8

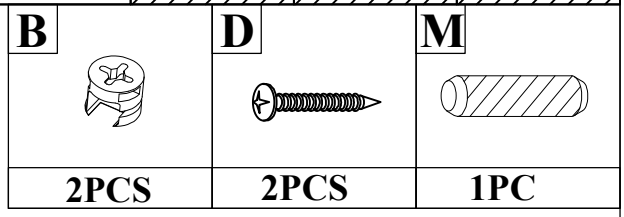
B
2PCS
D
2PCS
M
1PC

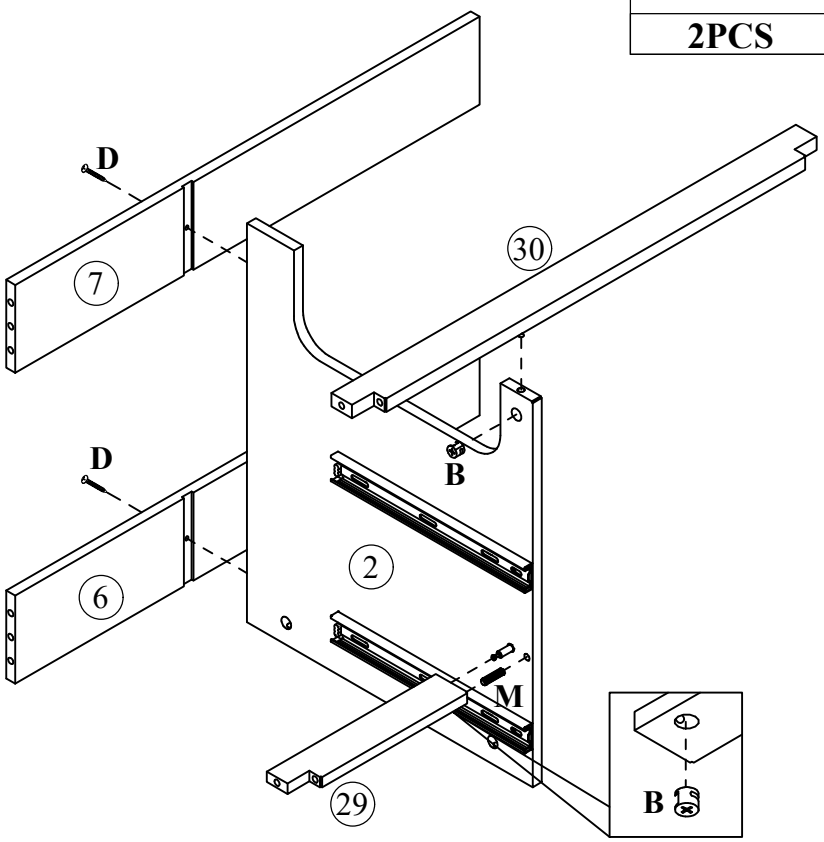
D
7
30
D
B
2
6
M
29
B

STEP: 9

B	M
11PCS	7PCS

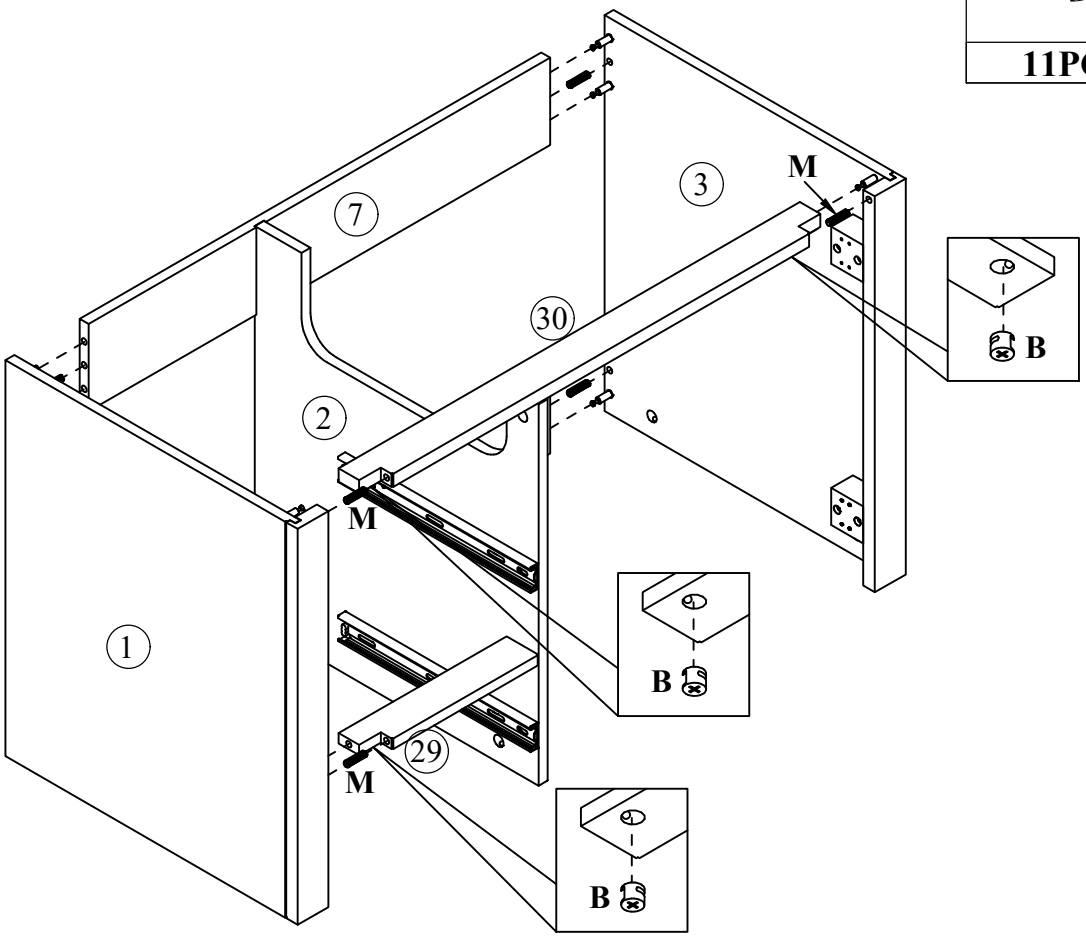

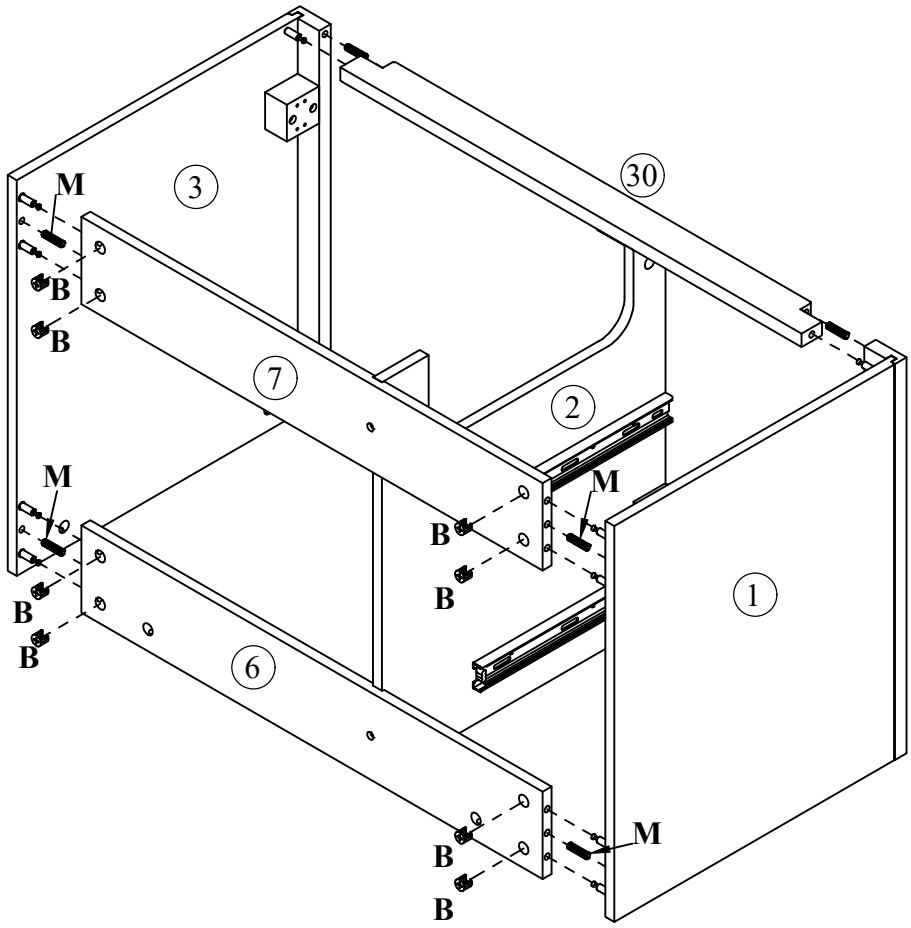

STEP: 10

B	M
8PCS	8PCS

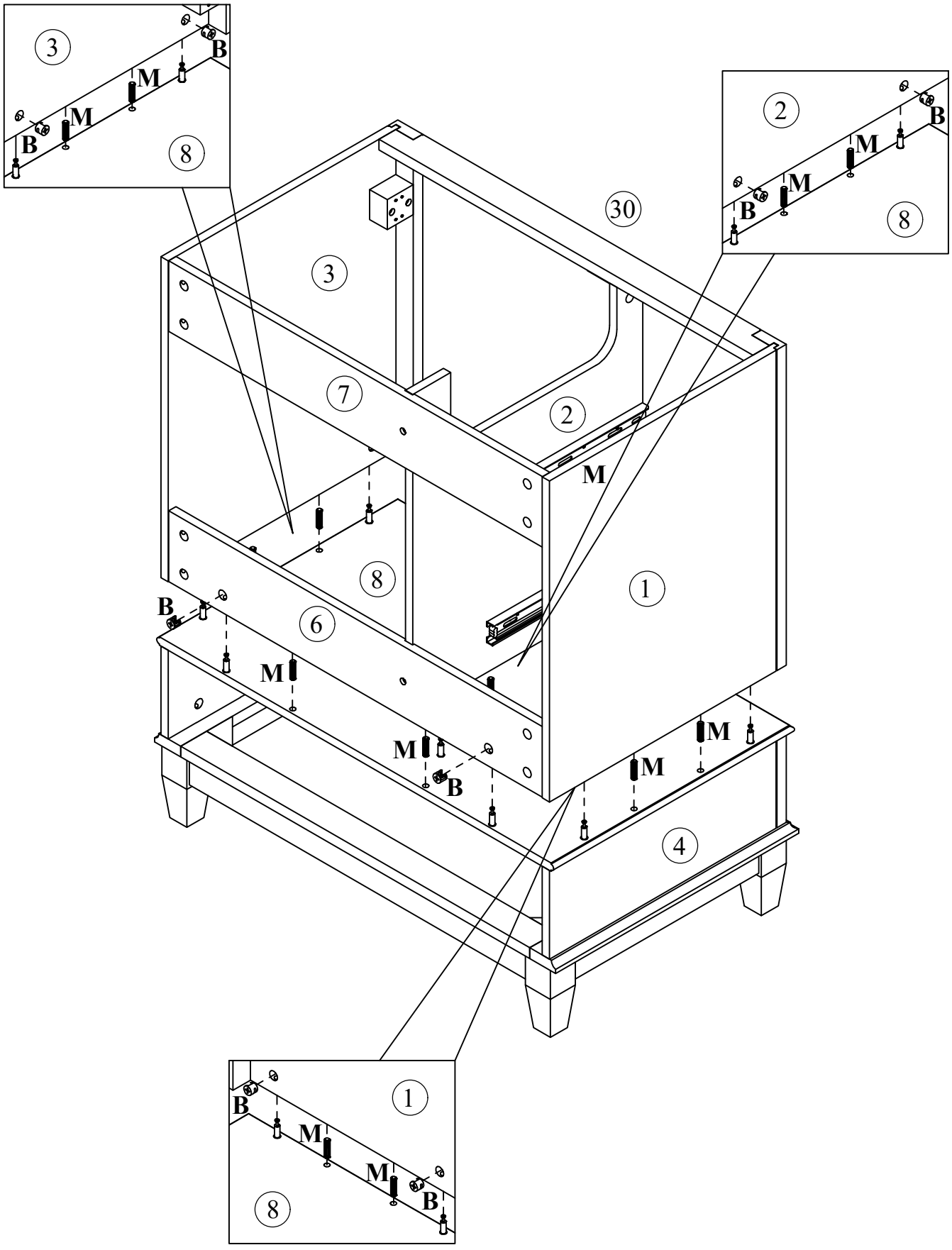

STEP: 11

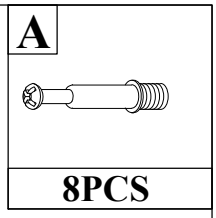

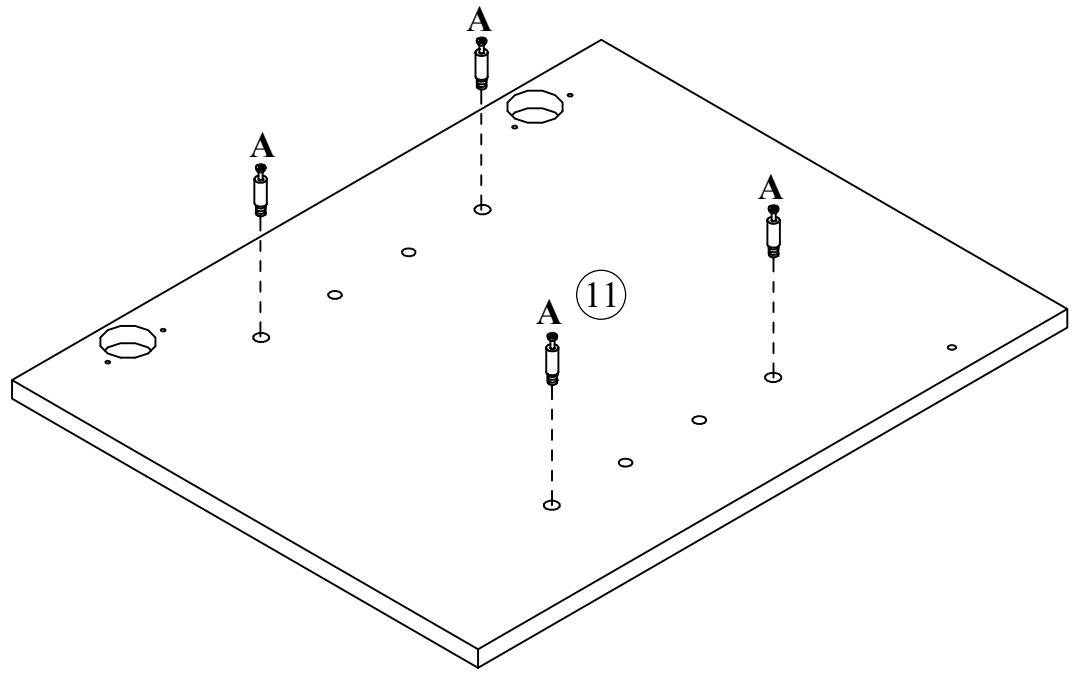

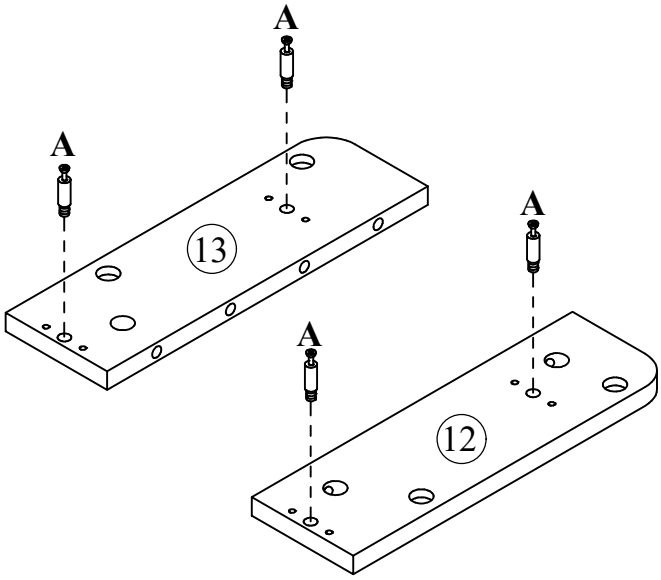

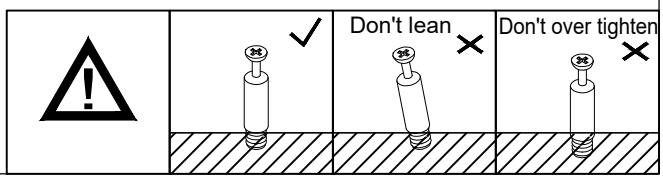

STEP: 12

B	K	L	M
	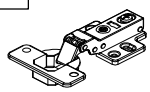		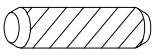
8PCS	2PCS	4PCS	12PCS

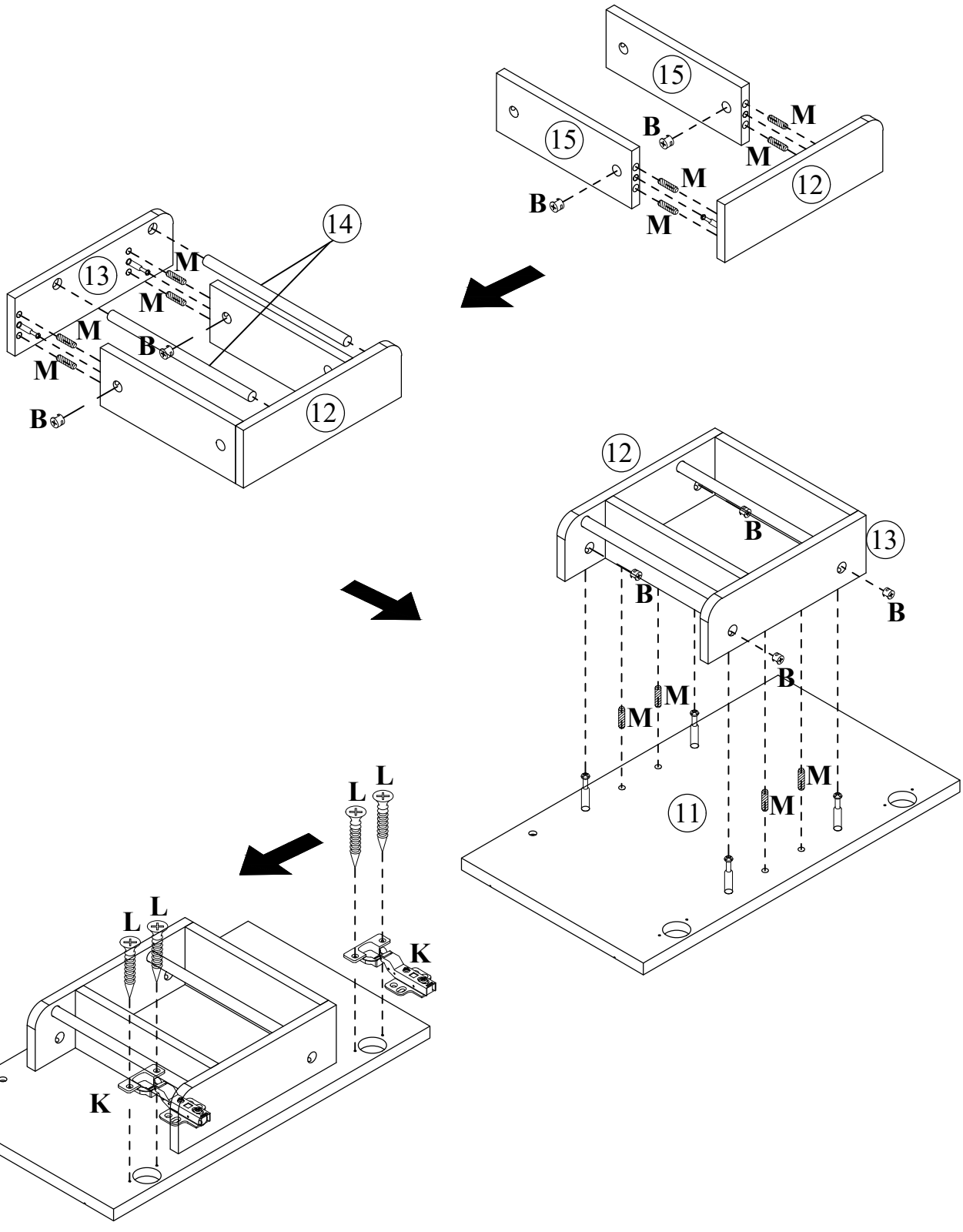

STEP: 13

H	I	L
	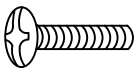	
1PC	1PC	8PCS

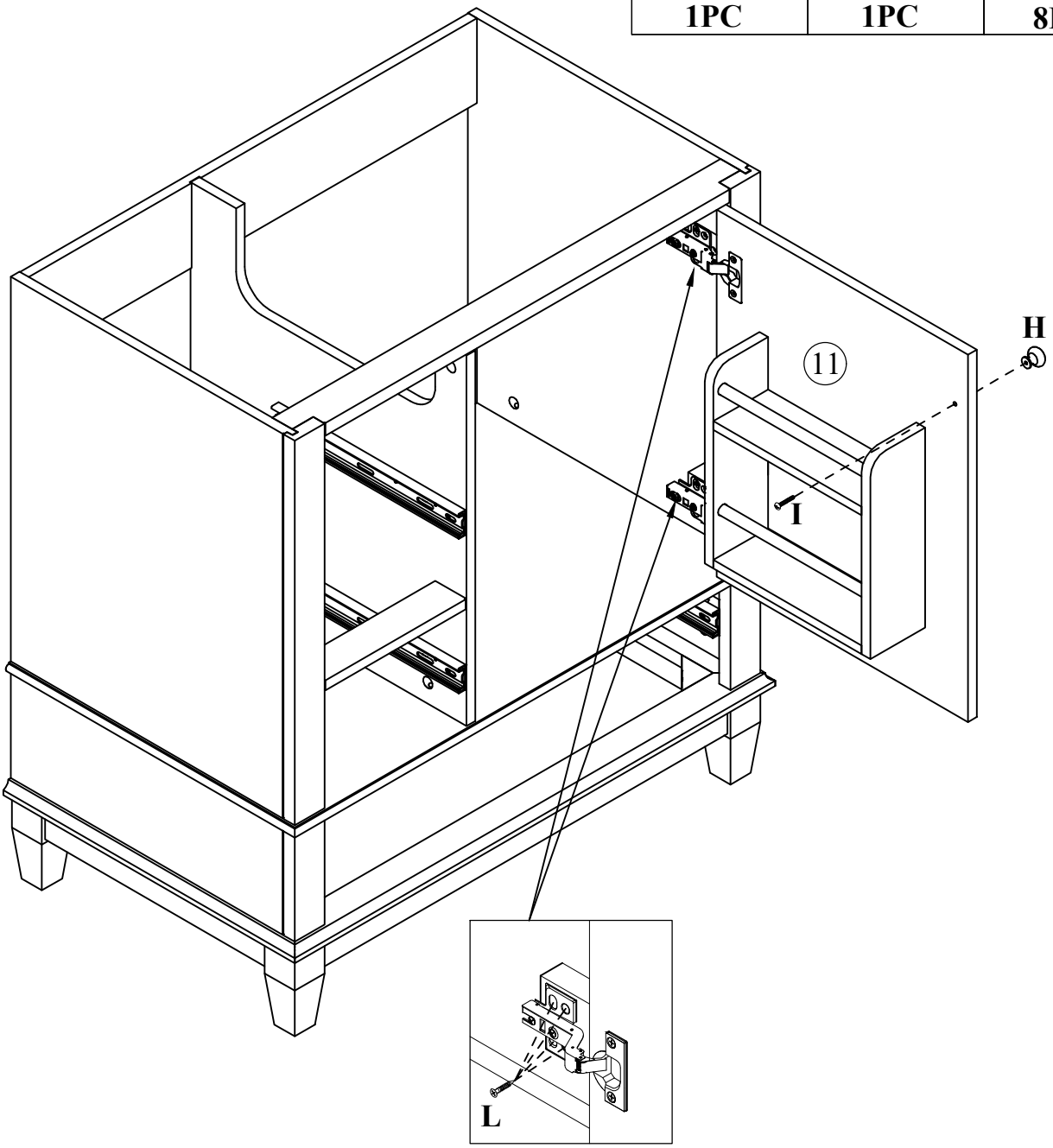

Use the screws to adjust up or down

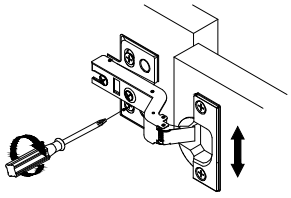

Use the screws to permanent

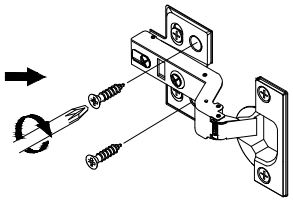

Use the screws to adjust left or right

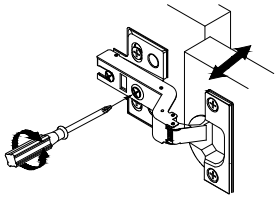

Use the screws to adjust in or out

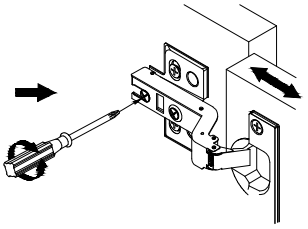

STEP: 14

C	N	H	I	J
8PCS	8PCS	2PCS	1PC	1PC

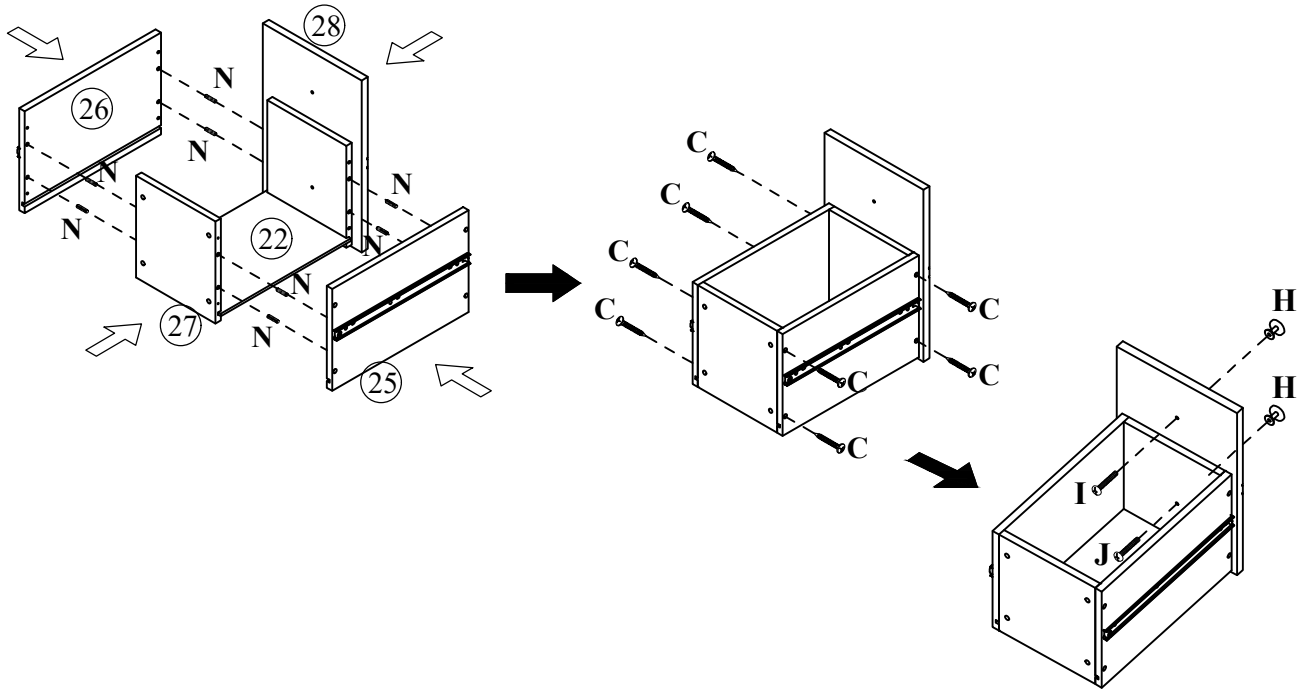

STEP: 15

N	C	H	J
4PCS	8PCS	1PC	1PC

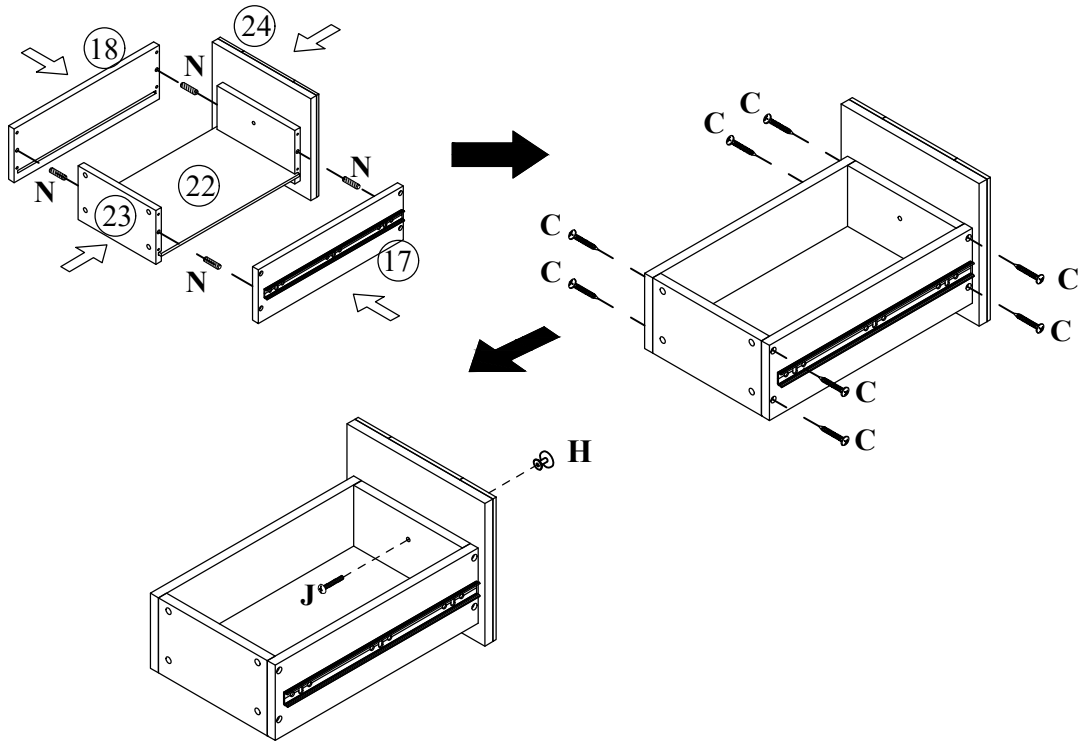

STEP: 16

C	D	N
1PC	1PC	8PCS

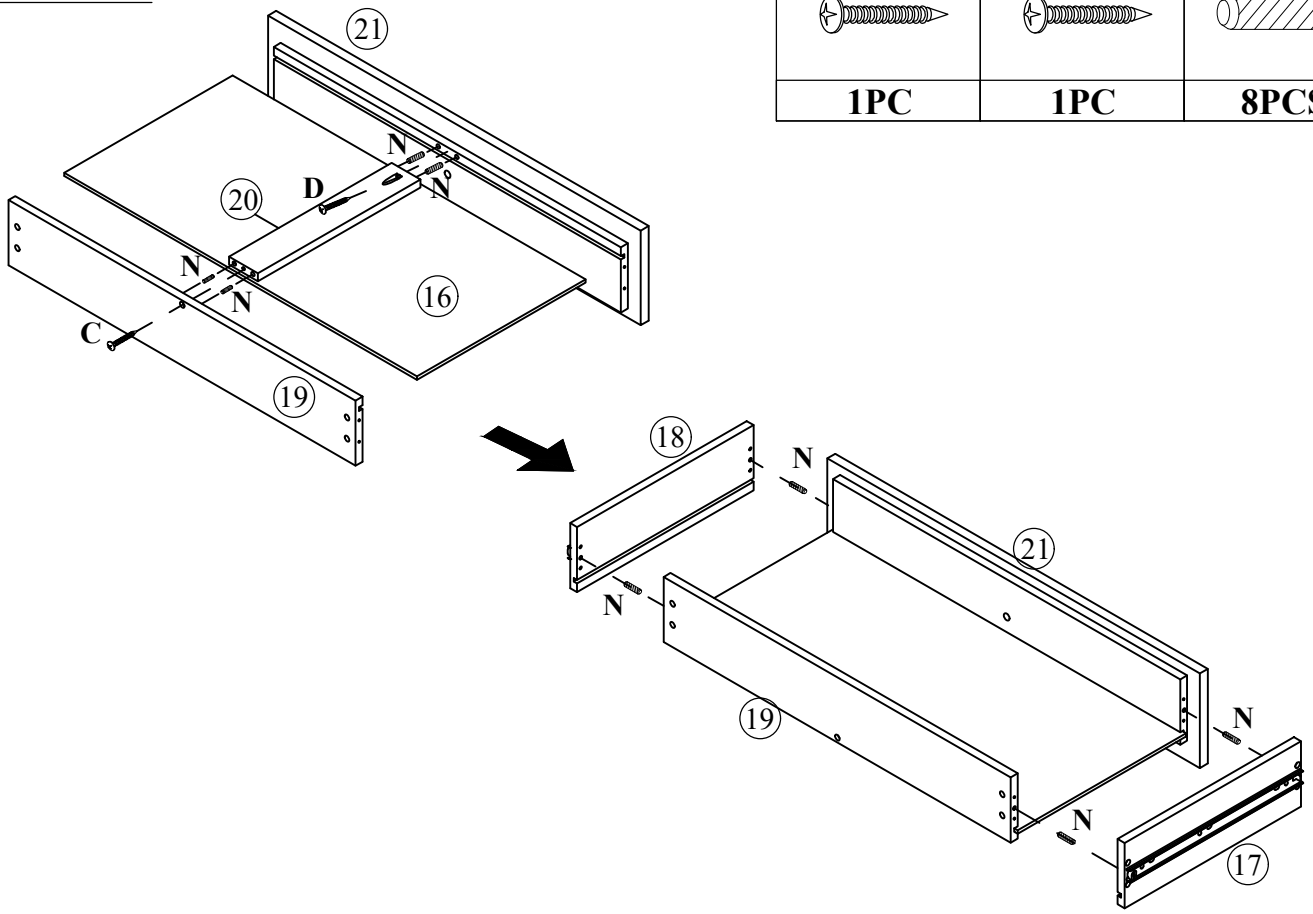

STEP: 17

C	H	J
8PCS	1PC	1PC

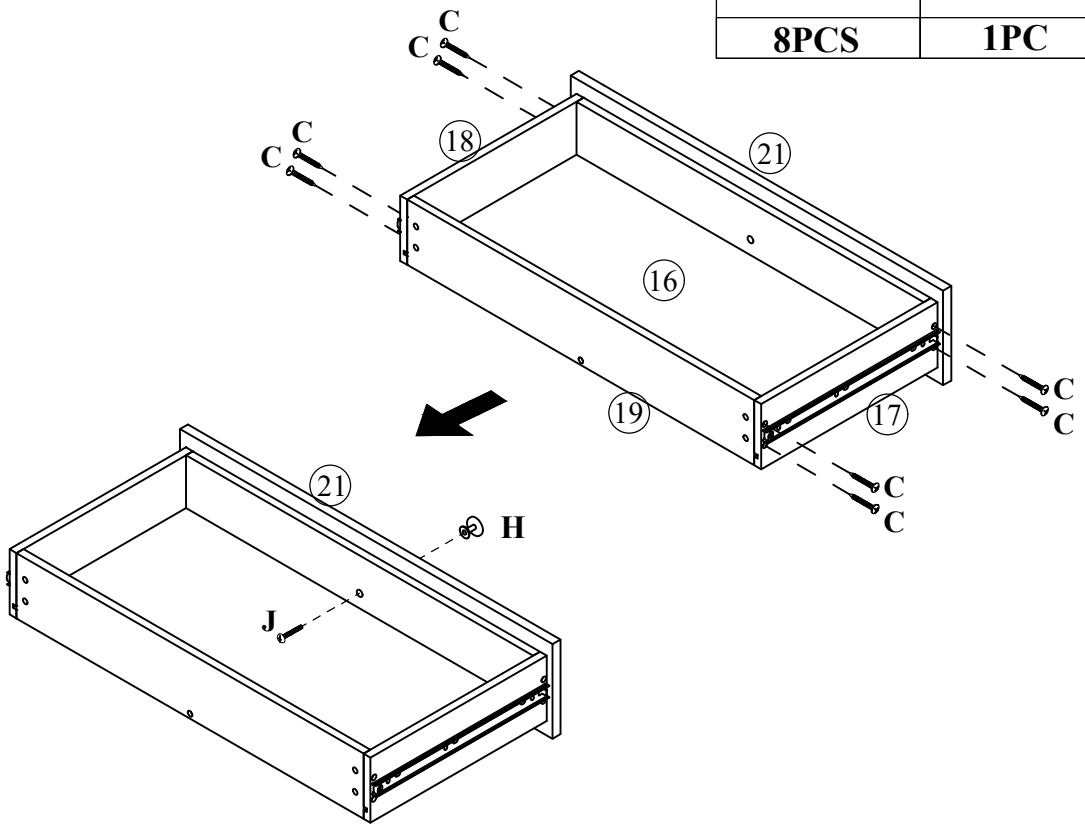

STEP: 18

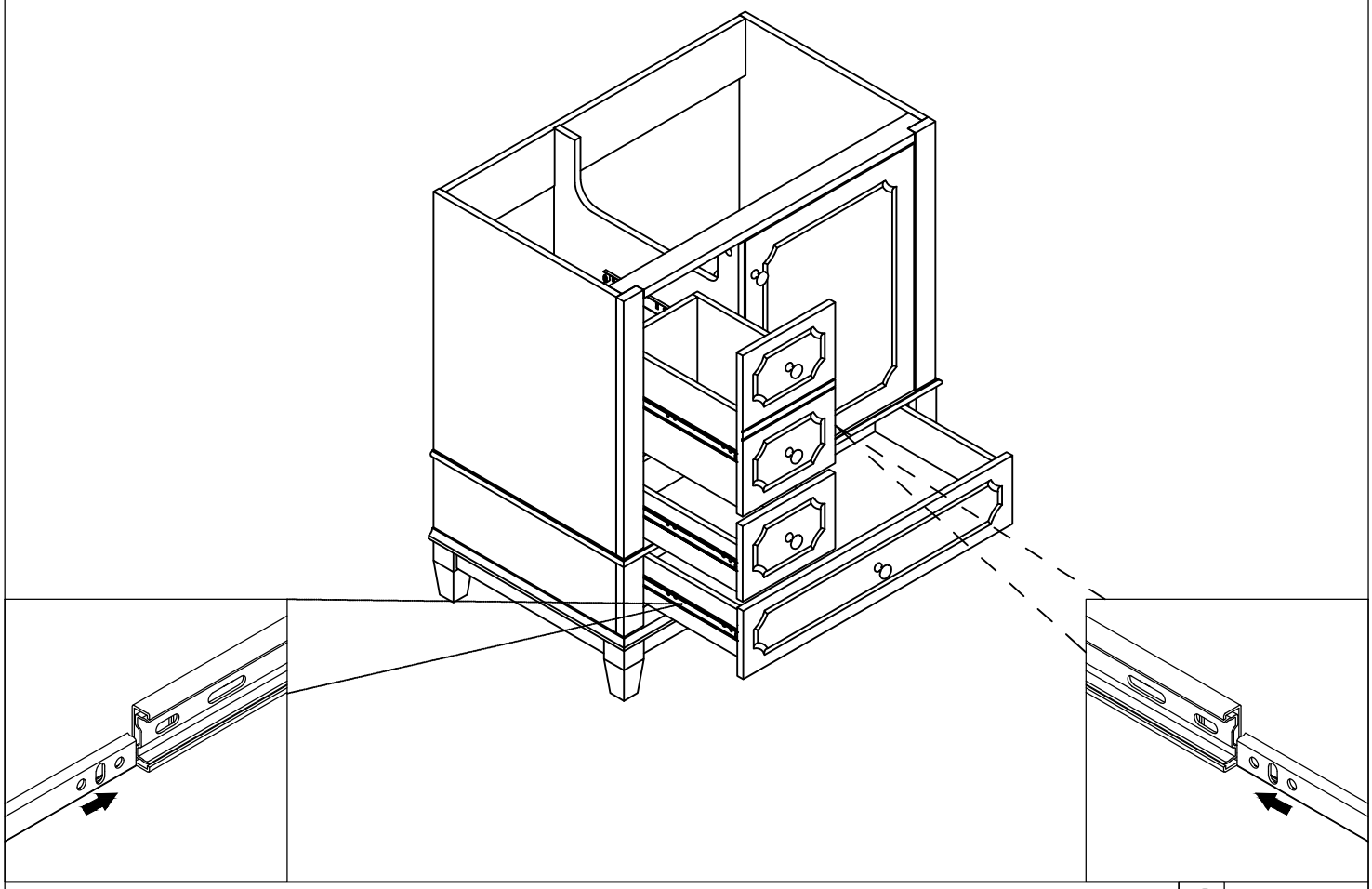

STEP: 19

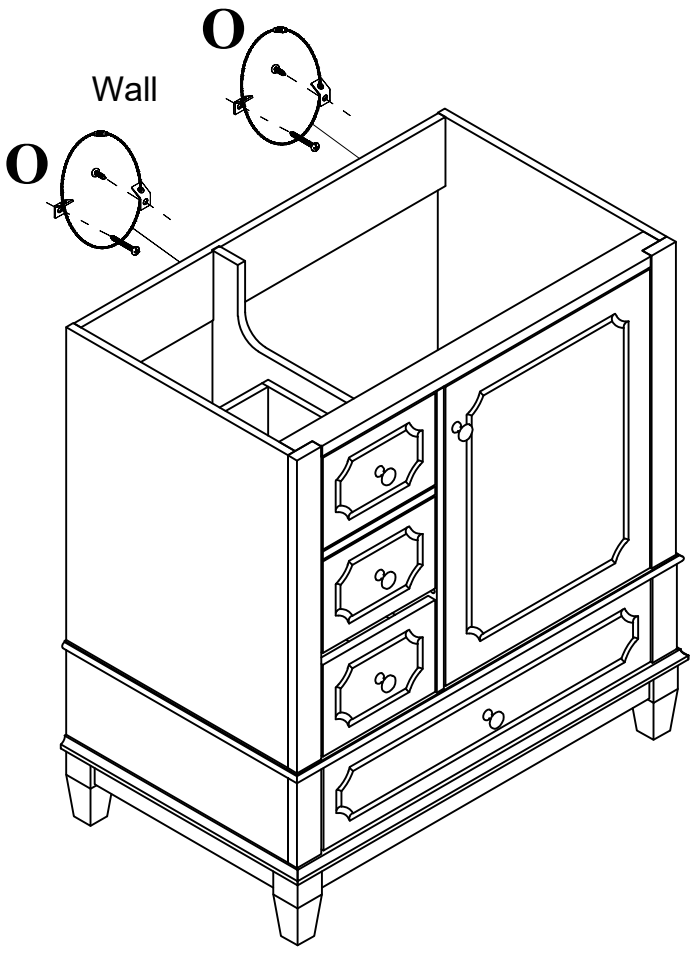

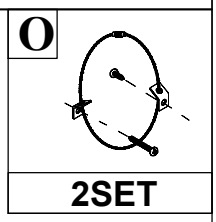

STEP: 20

Install the sink on the cabinet with glue.
Let stand for 24 hours
(Installez l'évier sur le meuble avec de la colle.
Laisser reposer 24 heures)

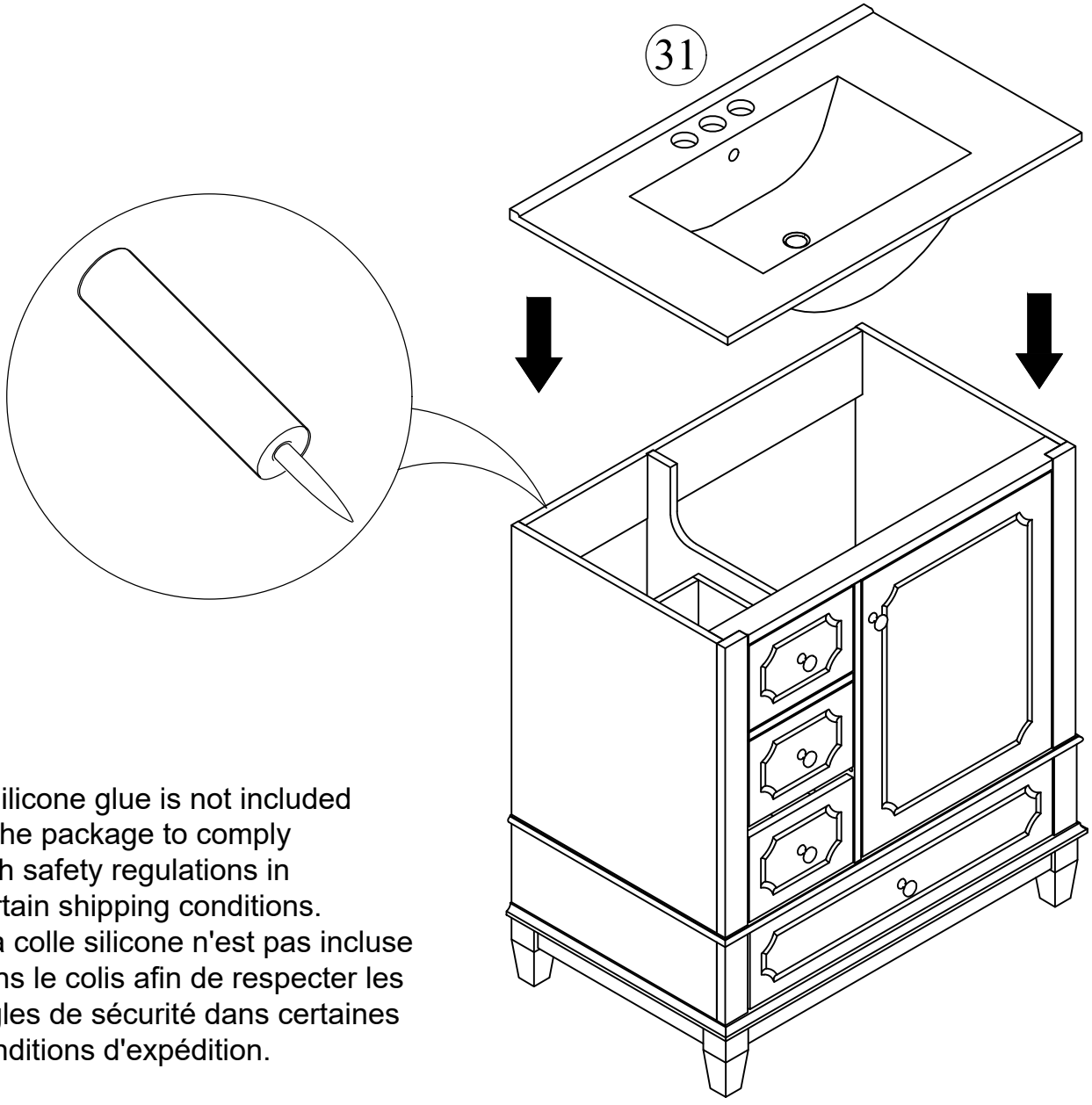

*Silicone glue is not included in the package to comply with safety regulations in certain shipping conditions.
*La colle silicone n'est pas incluse dans le colis afin de respecter les règles de sécurité dans certaines conditions d'expédition.

STEP: 21

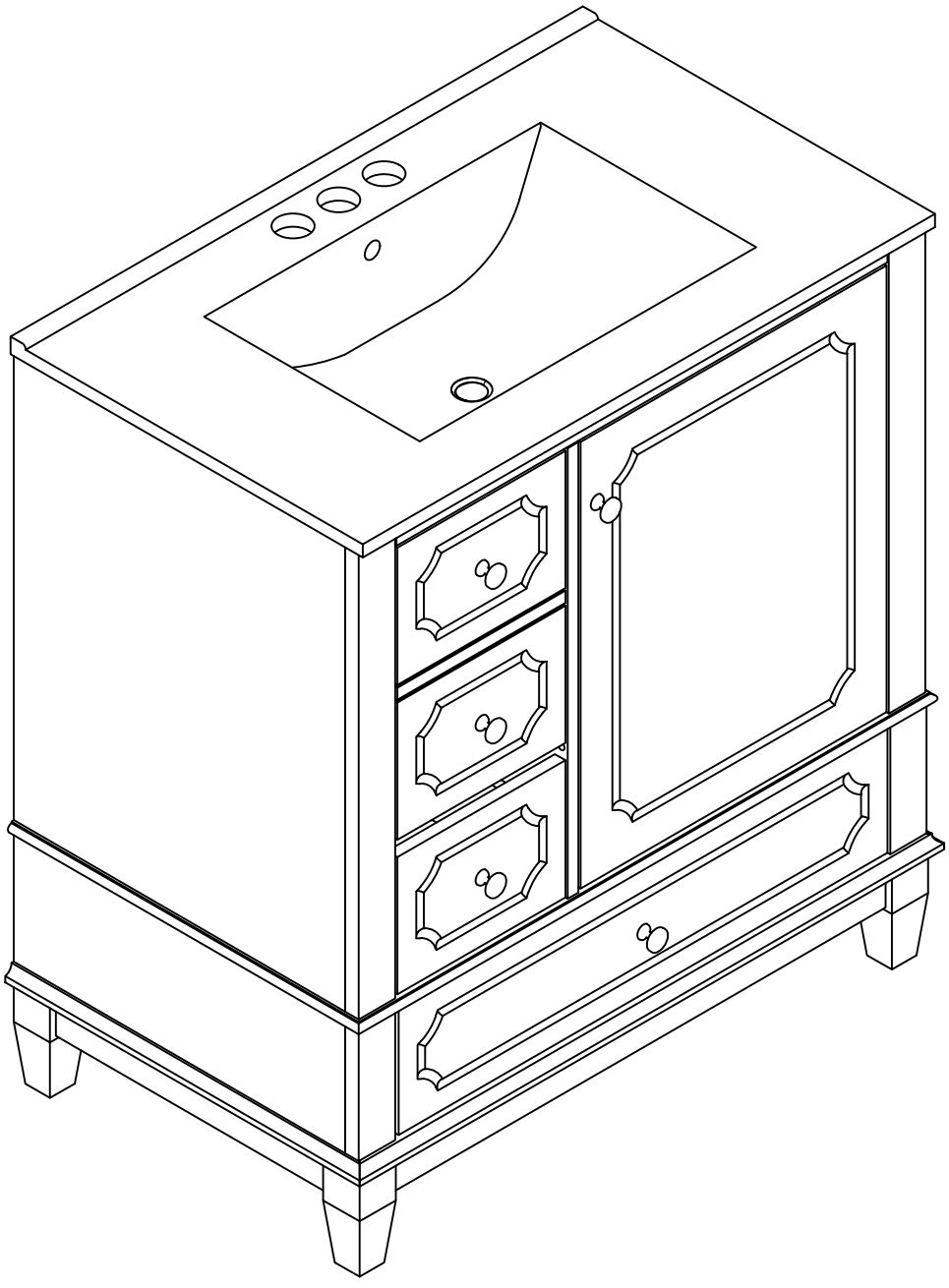

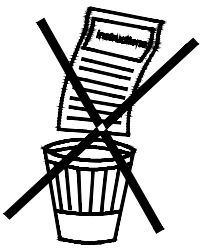

HINGE ADJUSTMENTS

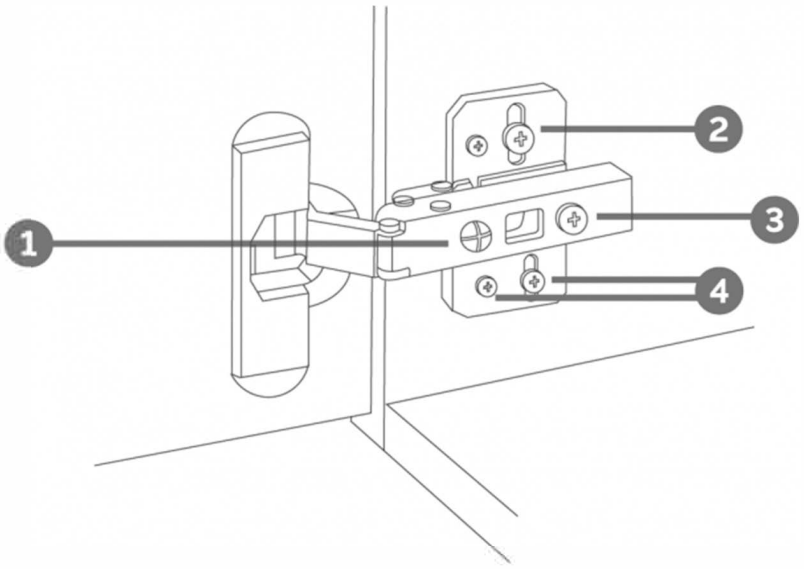

1 Sideways / Tilt adjustment

Turn the screw
clockwise to move the door further away from the side of the cabinet
anticlockwise to move the door closer to the side of the cabinet

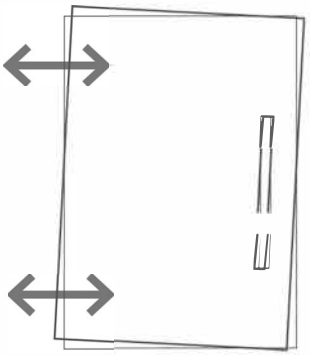

2 4 Height adjustment

While supporting the weight of the door, turn the screws
clockwise to move the door up
anticlockwise to move the door down

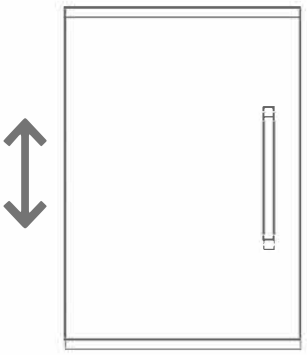

3 Forward and back adjustment

If the gap between the back of the door and the cabinet is too small, and the door may not close fully. Turn the screw
clockwise to decrease the gap between the door and the cabinet
anticlockwise to increase the gap between the door and the cabinet

