Always Comfortable.™

Assembly Instructions
Office Chair



So comfortable, you'll feel the difference the moment you sit down.

Should you prefer to speak with a customer service representative, you may call toll free :

1-855-372-2315.

Limited Warranty

Millwork Holdings seating products are warranted against defects in material and workmanship while owned by the "Original Purchaser". The term "Original Purchaser" is defined as that party or entity which purchases Millwork Holdings furniture from an authorized

Millwork Holdings retailer as shown by the original sales receipt. This warranty does not apply to "as is" or previously owned seating products. Millwork Holdings warrants its products to be free from defects in materials and workmanship (normal wear and tear, fading and stretching excepted), for one year from the date of purchase, except as provided below under the limited warranty.

This warranty gives you specific rights, and you may also have other rights, which vary from state to state. All warranties are limited to the original purchaser for normal use by a maximum of two users. Total weight capacity per chair is 250 pounds for a single user.

The exceptions or exclusions to this warranty are:

• Upholstery material and foam cushion material is warranted against defects in material and workmanship for a period of one year, beginning on the date of purchase as shown on the original sales receipt.

• Any warranty claim that is submitted after the limited warranty period, or without proper proof of purchase will not include the cost of parts, labor, or delivery on the warranted parts within a reasonable amount of time. We reserve the right to require damaged parts to be returned to us upon request. Natural markings such as scars, brands, grain variations, wrinkles, color variations, etc. will be considered normal characteristics and not construed as defects.

• For claims or questions concerning this warranty, please contact Millwork Holdings Customer Service department on the web at www.truecustomersupport.com. Be prepared to provide your name, address, daytime phone number, the model and purchase order number of the product, date of purchase, and the store where it was purchased. Millwork Holdings requires that the original sales receipt be submitted with all requests to confirm that you are the original purchaser according to our written warranty.

Guidelines

Thank you for selecting a Serta furniture piece!

Our primary objective is to provide fast, friendly customer service to all of our customers. We are here to help if you have any questions, comments, or are in need of warranty replacement parts.

Please call us toll free at: 1-855-372-2315
(Monday - Friday 6:00am - 5:00pm PST)

Or visit our website:
www.truecustomersupport.com
www.trueinnovations.com

Or call us toll free: **1-800-379-9973**

FAILURE TO FOLLOW THESE WARNINGS WHEN IN USE COULD RESULT IN INJURY

- Do not stand on the item or use as a step ladder.
- The chair has been tested and approved for users weighing up to 250 lbs (113kg) per seat.
- Do not use this item unless all bolts and screws are firmly secured and fastened.
- Check all bolts and screws every 90 days. As necessary tighten if any are loose.

Guidelines

Thank you for selecting a Serta furniture piece!

Our primary objective is to provide fast, friendly customer service to all of our customers. We are here to help if you have any questions, comments, or are in need of warranty replacement parts.

Please call us toll free at: 1-855-372-2315
(Monday - Friday 6:00am - 5:00pm PST)

Or visit our website:
www.truecustomersupport.com
www.trueinnovations.com

Or call us toll free: **1-800-379-9973**

FAILURE TO FOLLOW THESE WARNINGS WHEN IN USE COULD RESULT IN INJURY

- Do not stand on the item or use as a step ladder.
- The chair has been tested and approved for users weighing up to 250 lbs (113kg) per seat.
- Do not use this item unless all bolts and screws are firmly secured and fastened.
- Check all bolts and screws every 90 days. As necessary tighten if any are loose.

Parts & Assembly



A

Casters
Quantity: 5

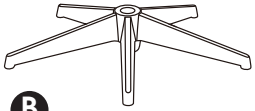

B

Base
Quantity: 1



C

Gas Lift with Telescoping Cover
Quantity: 1

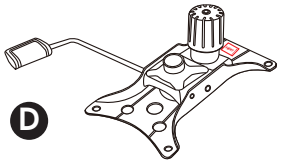

D

Seat Plate
Quantity: 1



E1

Left Arm
Quantity: 1



E2

Right Arm
Quantity: 1



F

Seat Cushion
Quantity: 1

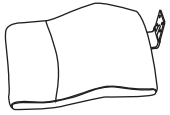

G

Back Cushion
Quantity: 1



H

1″ Big Screws
Quantity: 4



I

1-1/4″ Small Screws
Quantity: 6



J

1-1/4″ Big Screws
Quantity: 4



K

Allen Key
Quantity: 1

Assembly:

① Step One:

Select a smooth surface to avoid scratching the parts. Turn the Star Base (B) upside down. Press the Casters (A) into holes at the end of each leg. Turn the Star Base (B) upright and insert Gas Lift with Telescoping Cover (C) into the central hole of Star Base (B).

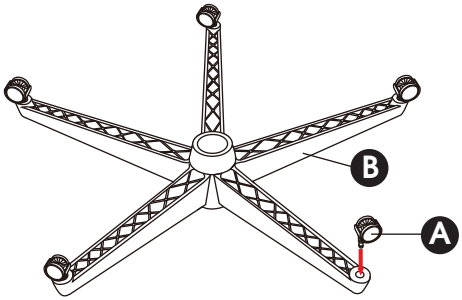

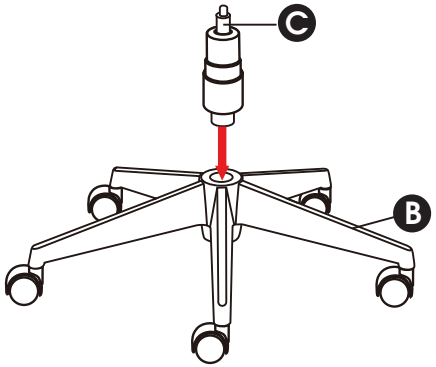

② Step Two:

Attach the Arms (E1 & E2) to the bottom of the Seat Cushion (F) by using 1-1/4″ Small Screws (I) in the arm holes.
Note: Align the arms so the FRONT on the arms matches the FRONT label on the bottom of the seat cushion. Tighten the screws completely.

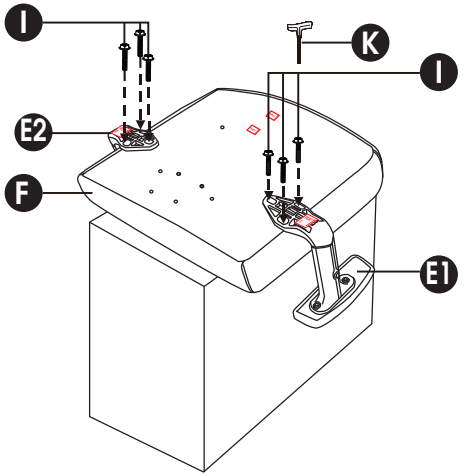

③ Step Three:

Attach Seat Plate (D) to the bottom of the Seat Cushion (F) (with the front of the seat plate facing the front of seat cushion). Attach by using 1″ Big Screws (H) for the holes of the Seat Plate (D) and tighten screws.
Note: Tighten the screws completely.

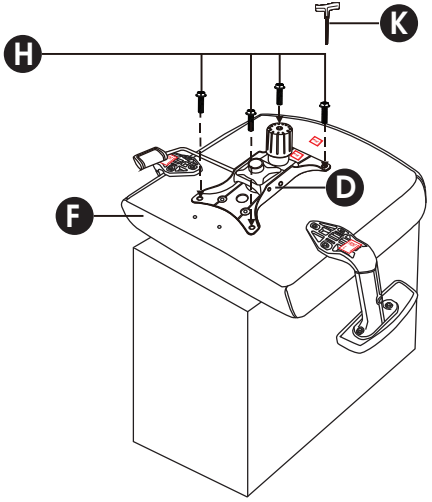

④ Step Four:

Align Back Cushion (G) with Seat Cushion (F) by positioning the back support plate over the Seat Plate (D) with 1-1/4" Big Screws (J). Tighten the screws.

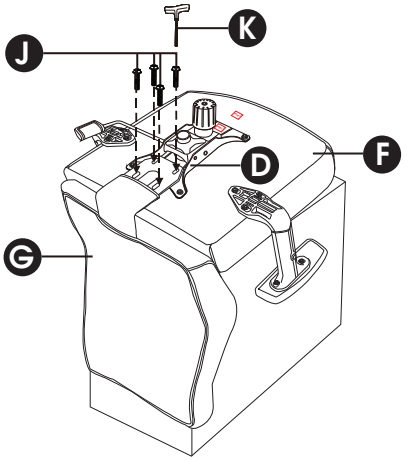

⑤ Step Five:

Turn the assembled chair upright and locate the central hole on the Seat Plate (D). Push down firmly over the Gas Lift with Telescoping Cover (C) until it is securely connected.

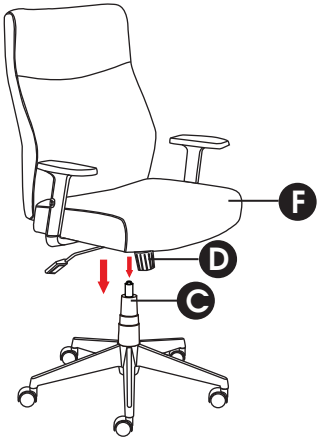

Function:

TO ADJUST SEAT HEIGHT

While seated, reach under the right side of the chair to find the handle. Lift the handle and raise your body up slightly to allow the chair to rise to the desired height. To lower the seat, lift the handle while applying more weight downward on the seat. The chair will descend until the handle is released or the chair reaches the bottom position.

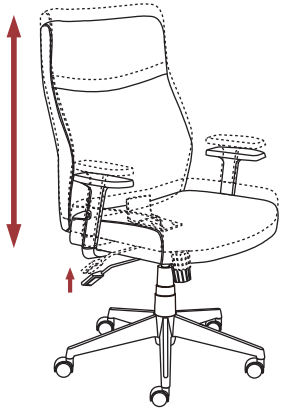

TO ADJUST TILT TENSION

Reach under the front center of the chair, grasp the round knob (R) and turn it counter - clock-wise to stiffen the tilt mechanism for a heavier user. Turn the knob (R) clockwise to loosen the tilt mechanism for a lighter user. Rotate the knob (R) until the desired resistance is reached.



TO OPERATE TILT LOCKOUT

While seated, reach under the right side of the chair to find the height adjustment handle. Pull the handle all the way out (away from the seat plate) to allow the chair to tilt backwards. To lock the chair in the upright or vertical position, sit upright and push the handle in towards the seat plate.

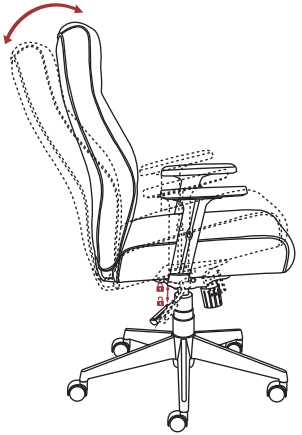

TO ADJUST ARM HEIGHT

Press the buttons on the chair arms. Press the buttons to allow the arms to move up or down freely then release the buttons once the desired height is reached.

