ASSEMBLY INSTRUCTION

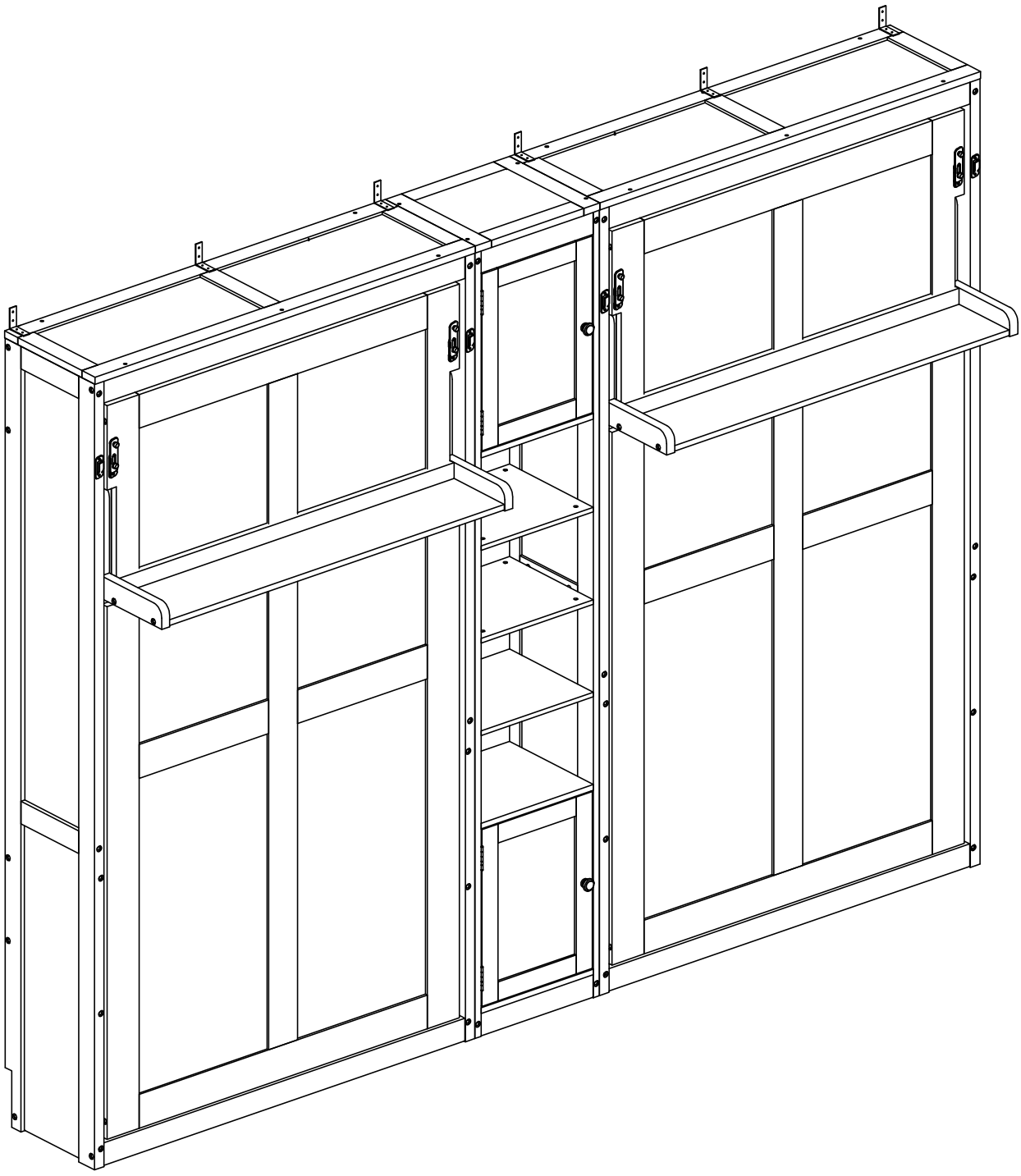

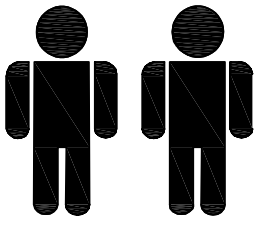

Two people are required to assemble and move this model.

OPTION 1:

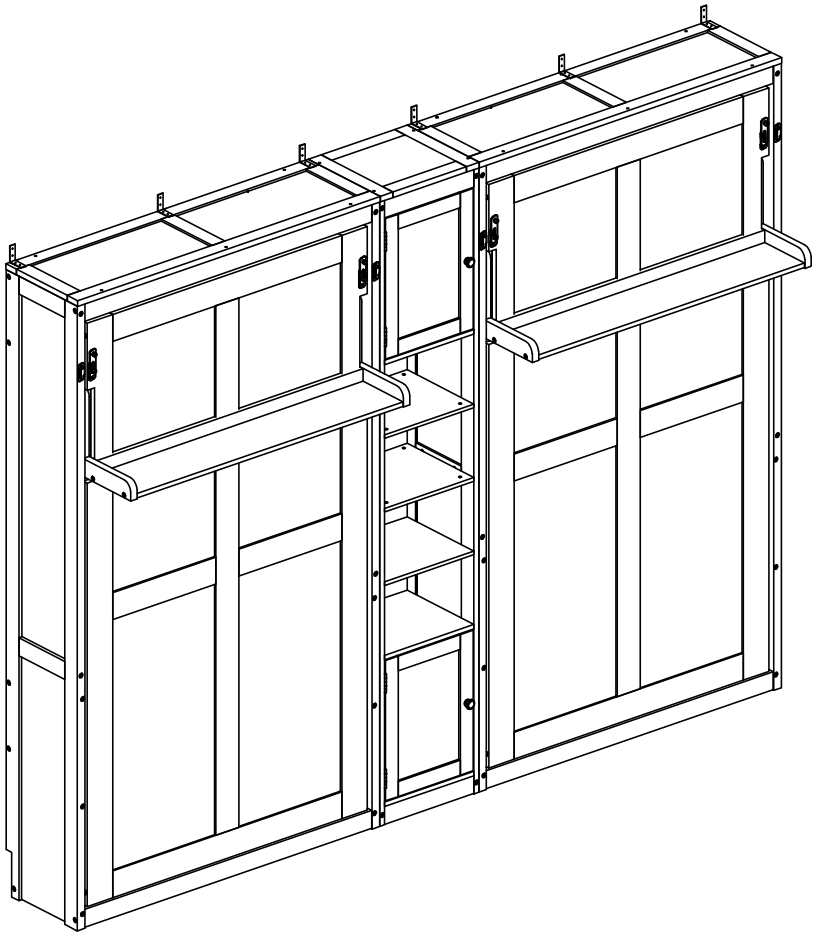

OPTION 2:

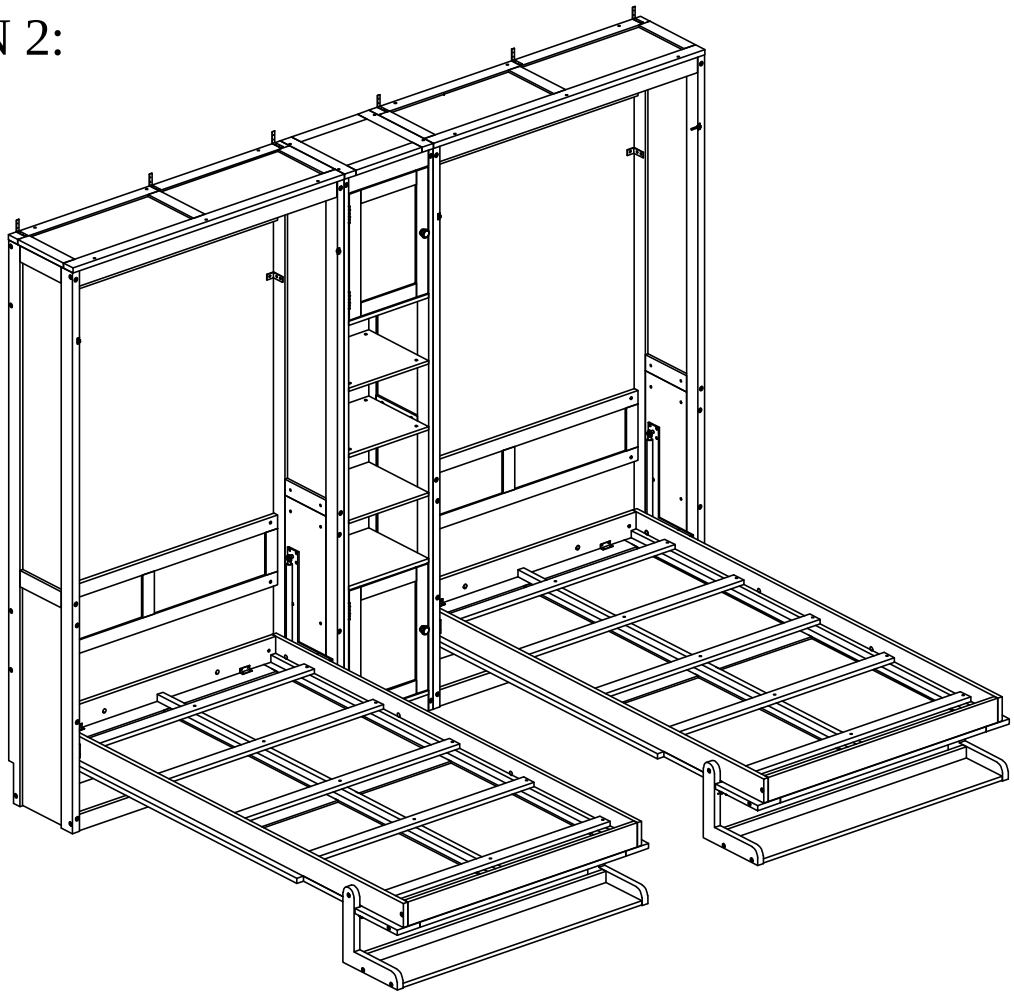

⚠ SAFETY FIRST: WALL ANCHORING IS NON-NEGOTIABLE

MURPHY BEDS MUST BE SECURELY ANCHORED TO STRUCTURAL MEMBERS. NEVER MOUNT SOLELY TO DRYWALL. IMPROPER INSTALLATION CAN CAUSE SERIOUS INJURY OR DEATH.

⃠ ABSOLUTELY FORBIDDEN HARDWARE



PLASTIC ANCHORS - WILL FAIL

A. WOOD STUD WALL

HOW TO IDENTIFY



KNOCK ON A HOLLOW WALL



STUD FINDER TOOL (MITS



STUDS SPACED IS 16" STUD

REQUIRED HARDWARE



HEAVY-DUTY SCREWS (MIN. 5/32" DIA., 2.5" LONG)

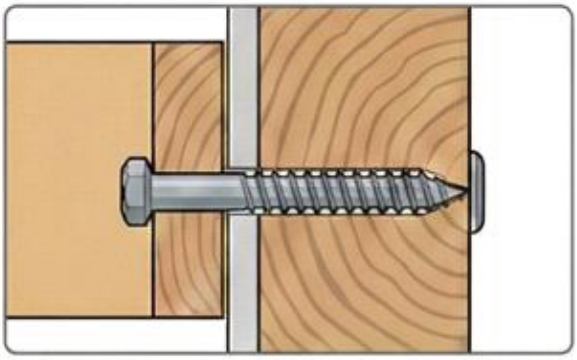

MUST PENETRATE WOOD STUD CENTER AT LEAST 2.5"

B. MASONRY/CONCRETE WALL

HOW TO IDENTIFY



KNOCK ON A SOLID WALL



DRILL BIT CREATES GREY/RED DUST

REQUIRED HARDWARE



ALL-METAL EXPANSION BOLTS (MIN. 5/32" DIA., 2.5" LONG)

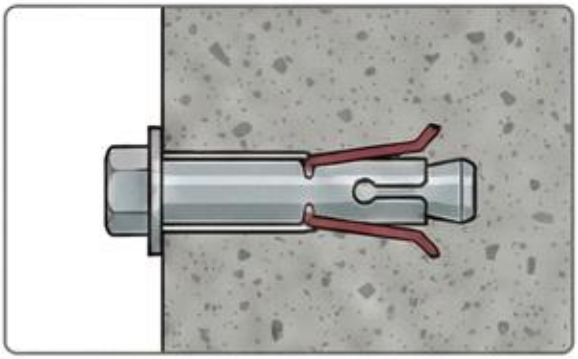

CLEAN HOLE OF DUST. DO NOT USE PLASTIC.

☑ FINAL SAFETY CHECKLIST

- ☑ VERIFY STUD CENTER BEFORE DRILLING
- ☑ ENSURE FLUSH WALL FIT (ADJUST BASEBOARD)
- ☑ PERFORM PULL TEST BEFORE MATTRESS LOAD
- ☑ AVOID HIDDEN WIRES/PIPES BEFORE DRILLING
- ☑ REGULARLY INSPECT AND MAINTAIN WALL ANCHORS
- ☑ CONSULT A PROFESSIONAL FOR WALL ASSESSMENT AND OPTIMAL HARDWARE; CUSTOMER ASSUMES ALL INSTALLATION LIABILITY

IMPORTANT INFORMATION PACKAGE.

THIS INFORMATION PACKAGE CONTAINS WARNING AND PRODUCT SAFETY INFORMATION. DO NOT PROCEED WITHOUT REVIEWING THOROUGHLY.

A. WARNING LABELS.

Your purchased Murphy Bed is delivered to you with WARNING LABELS to constantly remind you to take and adopt Safety Measure throughout the entire assembly and mounting points of the Bed to the walls.

DO NOT REMOVE these labels.

These Warning Labels serve as a Reminder Tool for visiting friends and relatives when using the Murphy Bed to ensure Safety Precautions are taken.

WARNING.

IMPORTANT SAFETY REQUIREMENTS - Bed Attachment to Wall.
For Your Safety, the Murphy Bed MUST BE ATTACHED to the Wall.

Seek Certified Professional Consultant / Contractors for their Services to:
1.) DETERMINE the WALL Type in Your Home;
2.) PRECISE HARDWARE that suits to the Wall Type in Your Home;
3.) INSTALL / ATTACH of the Murphy Bed to the Wall in Your Home;
4.) VALIDATE the Murphy Bed is appropriately and securely installed/attached.

The choice of wall anchoring hardware depends on the type of wall. This Murphy Bed is delivered with HARDWARE SCREWS suited for attachment to WOOD STUDS in walls and hardware fittings suitable for fixing on CONCRETE SOLID walls. Please select the correct wall-fixing hardware. Any STUDS type detected with your Consultant-Contractors to be NOT WOOD STUDS or CONCRETE SOLID WALLS - DISCARD and DO NOT USE these SCREWS. Use the hardware suitable for your wall material.

Seek the professional advice of your Consultant-Contractor and procure the appropriate hardware and brackets for the attchment of the Murphy Bed to the Wall.

FAILURE TO ADHERE TO THE ABOVE INSTRUCTIONS MAY RESULT IN SERIOUS and/or SEVERE INJURIES or Death caused by the detachment of the Murphy Bed from the Wall.

SAFETY PRECAUTION :
1.) **MAXIMUM Mattress Weight** suited to your Murphy Bed : 77 lbs (35 kg);
MAXIMUM mattress thickness: 8 **inches (** 20 **cm);**
2.) **ENSURE ADULTS ONLY** throughout the entire assembly and attachment.
3.) **KEEP ALL Children, Non-Ambulatory persons and Pets** at bay during the entire assembly and attachment.

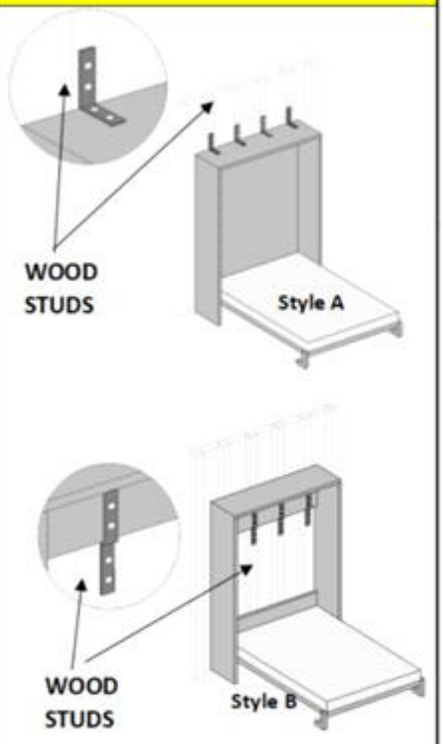

WOOD STUDS walls - Locking wall illustration

LINE ART for Reference only and
NOT DRAWN TO SCALE.

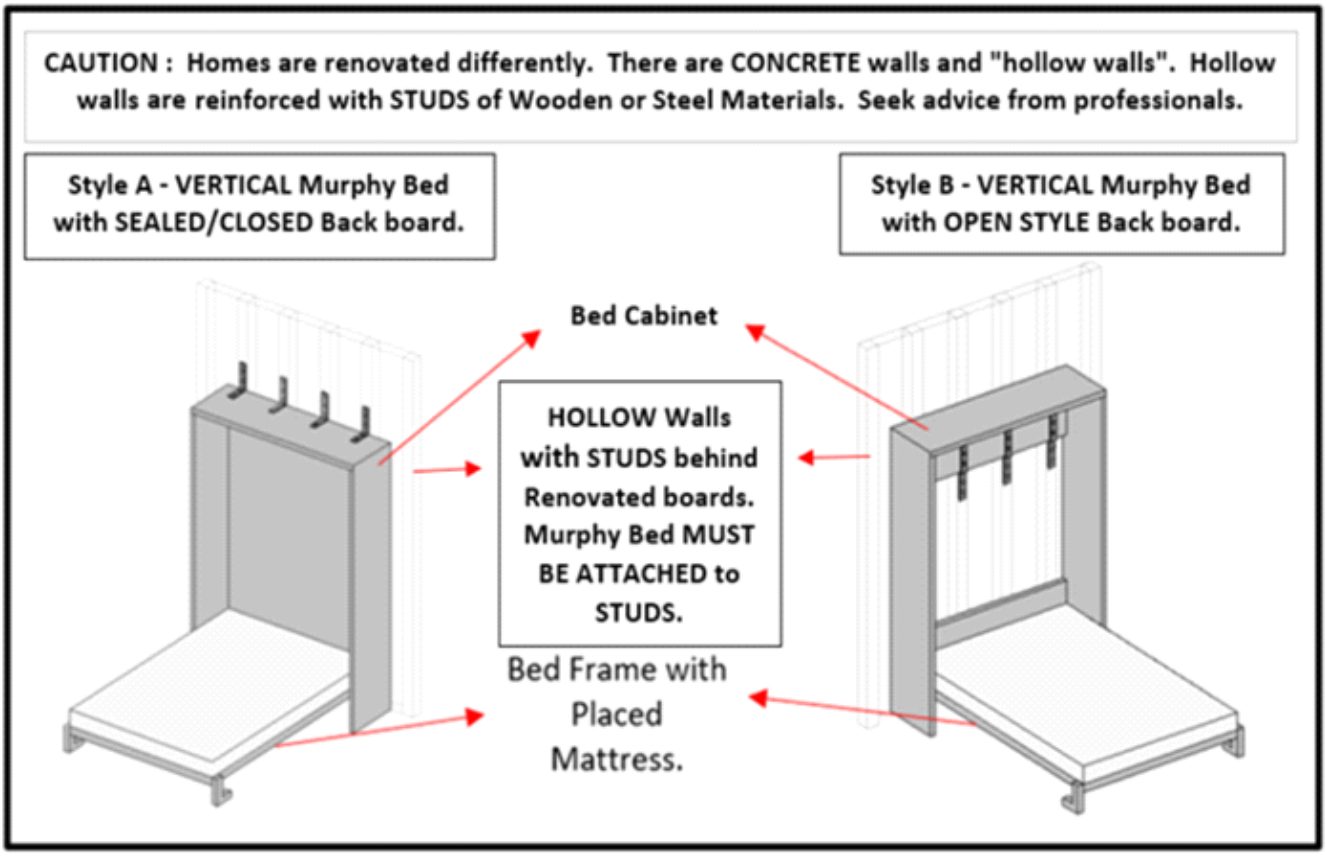

B. SAFETY REMINDERS. MARKINGS in WALL - WHERE TO ATTACH the MURPHY BED.

Irrespective of the wall type, whether **Solid Concrete Walls** OR **Decorative Walls with WOODEN Studs** OR **Decorative Walls with Metal Studs**, ensure that

a. **) you choose a professional installer who has a good understanding of the wall structure where the Murphy Bed is anchored, including the position of the wall studs and structural components in the case of a wood or metal structure.**
b. **) precise markings of the positions of the anchor points are to be made on the wall for easy identification during the Murphy Bed attachment to the wall.**
c. **) the relevant and appropriate Hardware with Metal Brackets are READY for this attachment and are within easy access for prompt and efficient attachment.**

This product requires Professional Consultation and Installation*.

* When you choose the professional installer, make sure to comply with all applicable laws, regulations and rules in the city, state or country where the Murphy Bed is installed.

To have your Murphy Bed fully assembled and to achieve its intended functionality - you **MUST READ** through this entire Assembly Instructions Manual before you start the assembly of the bed

1.) **There are numerous Safety Issues and Safety Precautionary Actions that you MUST KNOW before you start the Assembly.**

2.) **CAUTION - Failure to FOLLOW / ADHERE to the GUIDE, WARNING AND REMINDERS here, may result in serious / severe injuries or death.**

3.) **PRECAUTION : For the assembly, Adult Partners only, to assist in the entire assembly**. **Ensure at least 3 (three) ABLE BODIED PERSONS ONLY in the entire assembly and attachment of this Murphy Bed to the walls of your home.**

4.) **CAUTION : During the entire assembly process and attachment of the Murphy Bed to the walls of your home, Keep ALL Children, Non-Ambulatory Persons and Pets completely at bay**.

5.) SAFETY REMINDER on / to : Personal, Family Members and Pets. The Murphy Bed may be shipped to you in 3 to 5 packages and are HEAVY. Each carton holds many parts and components. Some of these components eg., bolts and screws are relatively small* in size.

***. During the assembly process, ensure that any misplaced bolts and nuts are picked up so that Children and /or Pets do not play or ingest these.**

6.) This Murphy Bed is intended for ADULT USE ONLY.

7.) This Murphy Bed is delivered with pre-installed hardware for the wood studs and the concrete solid wall - please choose the appropriate hardware according to the type of the wall.

8.) **Your Home's Wall Type -** Every home is renovated differently with different wall(s) type / finishes. Before you proceed to assemble your Murphy Bed :

a.) **SEEK and CONSULT Professional Services** to ascertain the wall type in the designated location where you intend to attach the Murphy Bed;

b.) ENSURE the Consultant-Contractor specifically **INFORMS** you of the **WALL TYPE** in the designated spot where you intend to attach the Murphy Bed.

c.) **ENSURE** the Consultant **INFORMS** you specifically on the matching and relevant Hardware / Brackets to secure and attach the Murphy Bed to the wall.

9.) **WARNING - YOU MUST HEED THE INSTRUCTIONS** given by your appointed Consultant-Contractor on the :

a.) Mounting Hardware Type that suits the wall(s) type - where / when it is NOT WOOD STUDS or NOT CONCRETE SOLID WALL, the **pre-packed hardware not match/ not fit.**

b.) Number of Mounting Points for the Murphy Bed to the Wall.

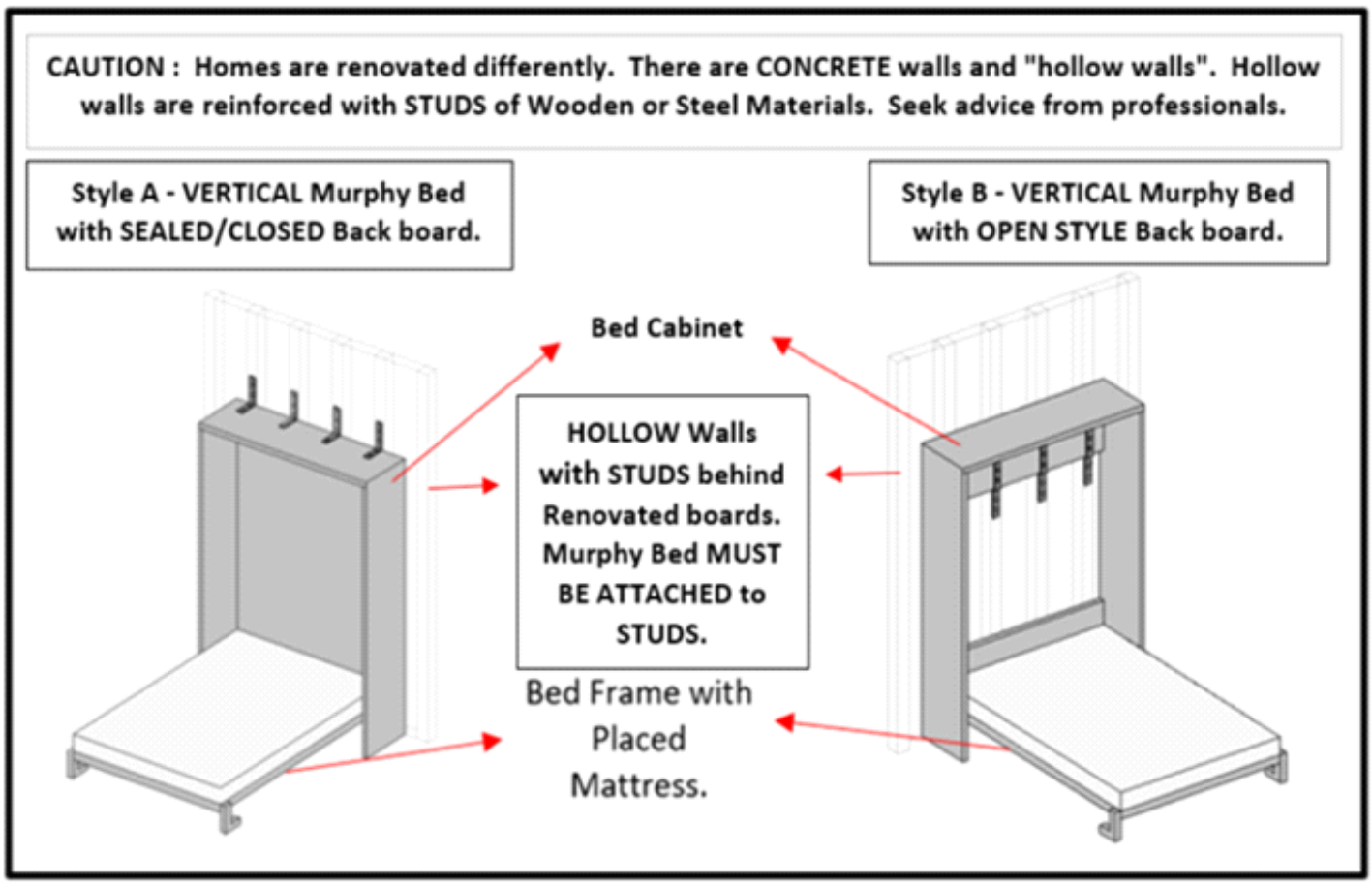

11.) This Murphy Bed is designed for home use and not intended for commercial use.

12.) This Murphy Bed is not intended to be moved, modified, uninstalled or disassembled once professionally installed.

C.) MOUNTING INFO & HARDWARE.

1.) REMINDERS :

a.) **In the event, that this pre-packed Screws Set does not match to the walls in your home - DO NOT USE / DISCARD these hardware.**
b.) **ADHERE to the Professional Consultant-Contractor** instructions and information on the **RELEVANT** mounting hardware that suits your wall.
c.) Procurement of these **RELEVANT** hardware is an arrangement made between your Consultant-Contactor and you.

2.) A step ladder (not provided) is needed to attach the L-Brackets to the wall, at the Top of the Murphy Bed. **DO NOT** lean against the Top of the Murphy Bed, it may cause sagging.

Murphy Bed Style A

L-Bracket Fixture to Wood Studs

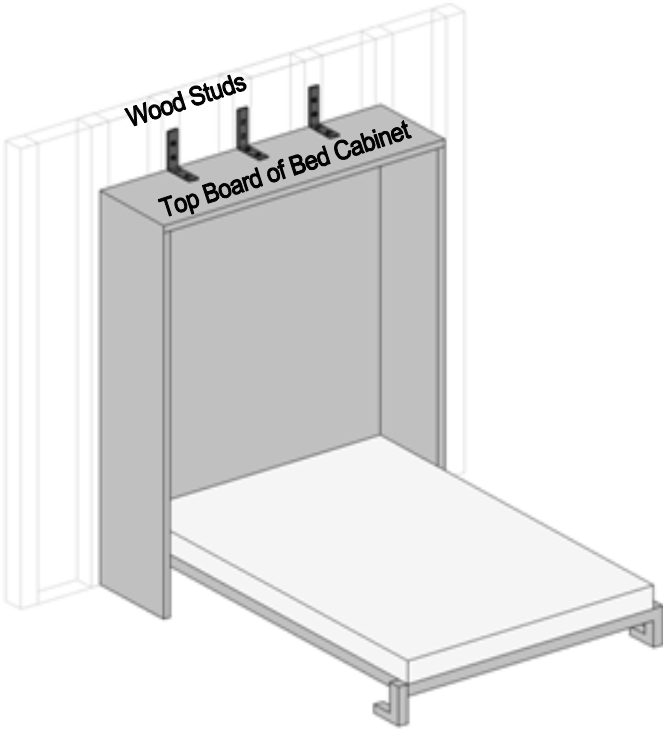

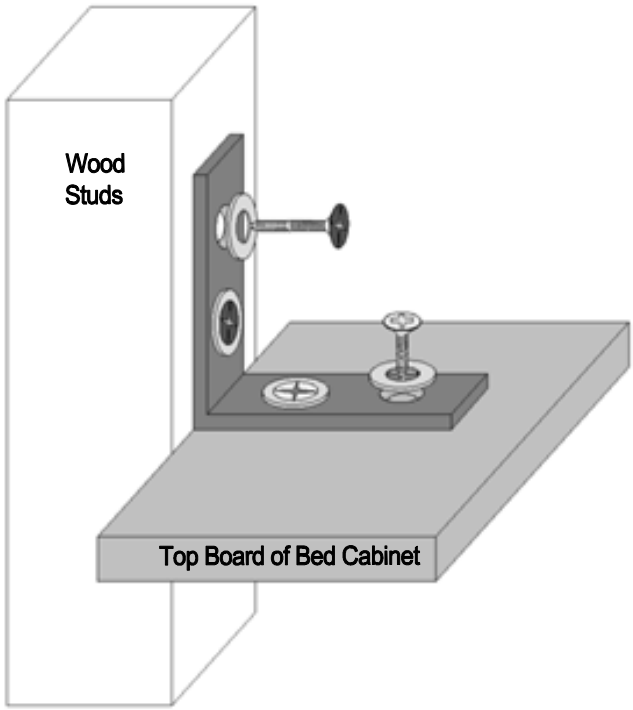

Z-Bracket Fixture to Wood Studs

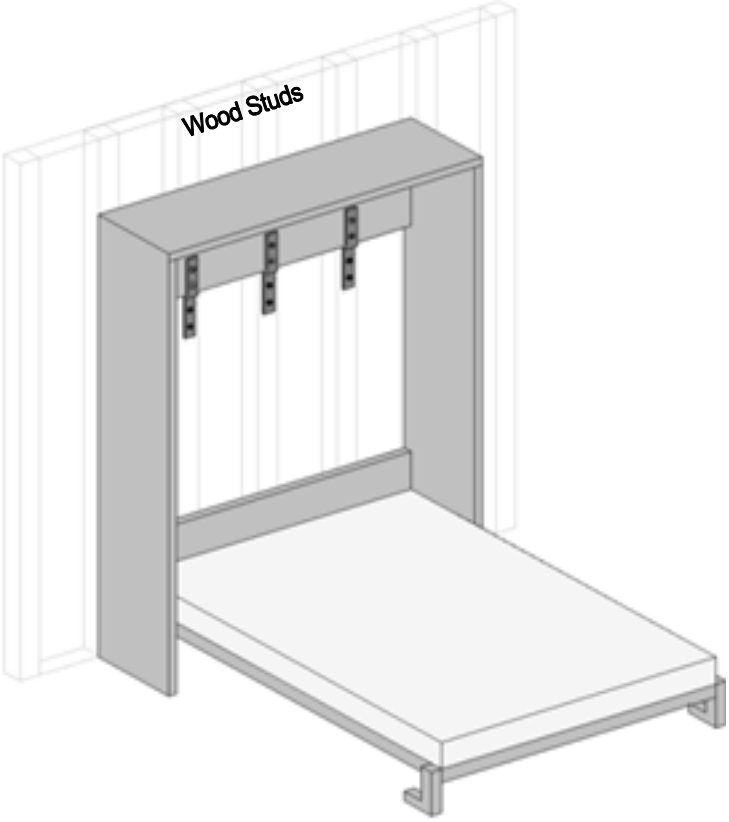

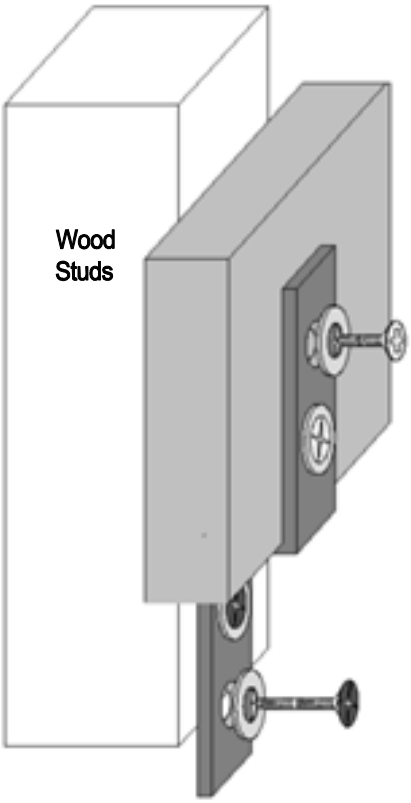

D.) IDENTIFICATION of TOOLS and ATTACHMENT SKILL.

The parts and components to assemble the Bed Frame are stated in the Assembly Instructions. Follow the instructions with attention.

For an efficient assembly, after opening the cartons shipped to you :

a.) open and layout all parts and components in sequence;
b.) account for every part, hardware and component;
c.) then lay out the parts close to each other;

Assemble and tighten each bolt / nut / screw up to 80% to allow for the Bed Frame and Bed Cabinet to be HELD together.

Upon FINAL assembly where all the parts and components are FITTED precisely, in a sequential manner - proceed to tighten each bolt & nut & screw gradually.

CAUTION :

1.) The METAL PLATES to the sides of the Side Rails - MUST BE FULLY and SECURELY TIED to the SIDE RAILS.

2.)The Piston L-Brackets that are attached to the INNER WALL of the Bed Cabinet - MUST BE FULLY and SECURELY TIED to these Inner Walls.

3.)These Metal Plates and the L-Brackets - are the components that are holding the Pistons that allow your Bed to "travel" to an OPEN or CLOSED position.

4.)Frequent Inspections of these Metal Plates / Brackets and Pistons Bolts, up to Once a Month - to ascertain these DO NOT BECOME LOOSE. For if these bolts to the Bed Frame and or Bed Cabinet or Pistons are loose, may cause the BED FRAME to become DISLODGED and cause injuries.

REMINDER : NEVER FULLY TIGTHEN any screw / nut or bolt in one session. If you DO TIGHTEN the hardware all the way into the core of the wood, this cause the parts to become skewed that would impact other parts of the item not being able to be aligned to its mounting points for assembly.

E. ALL ASSEMBLY WORKS REQUIRES A TEAM OF NO LESS THAN 3 ADULTS.

Reminder : Per above info, the cartons and products are heavy - therefore exercise CAUTION at all times and ENSURE YOUR TEAM OF 3 for theentire ASSEMBLY.

F.) ASSEMBLY OF BED CABINET.

Identify all parts and components for the Bed Cabinet.
Assemble the Bed Cabinet according to the Assembly Instructions.

Upon the completion assembly of the Bed Cabinet, make a final inspection that all joints and parts are fully and securely attached.

CLEAR all debris in the area where your Murphy Bed is going to be attached to the wall.

Move this FULLY ASSEMBLED BED CABINET and position this BED CABINET some 2feet to 3 feet away from the designated Wall, where you have previously made markings.

SAFETY REMINDER - The Cabinet is NOT ATTACHED TO THE WALL, YET. From here on - YOU MUST HAVE 2 ADULT to HOLD and STABILISE this BED CABINET, to prevent the Bed Cabinet from TIPPING OVER.

G.)THE FIXATION OF THE BED CABINET

Fix the bed cabinet to the wall using wall-mounted hardware, and check to ensure that the bed cabinet is securely fastened to the Wood Studs or Concrete Solid Wall.

REMINDER : FOLLOW the INSTRUCTIONS from your Professional Consultant / Contractor.

SEQ	Bed Description	Bed Size	Details.
1	Single/Twin(XL)	~38*75/80~ inches	Attach at least 2 pieces of L or Z Hardware onto the Wall or Studs;
2	Full	54*75inches	Install at least 3 pieces of L or Z Hardware onto the Wall or Studs;
3	Queen	60*80inches	Install at least 3 pieces of L or Z Hardware onto the Wall or Studs;
4	King	76*80inches	Install at least 4 pieces of L or Z Hardware onto the Wall or Studs;
5	Other Bed Size		Other Bed Sizes - seek advice from your Contractor

H.) ASSEMBLY of BED FRAME.

Identify all parts and components for the Bed Frame.
Assemble the Bed Frame according to the Assembly Instructions.

Upon completion of assembly of the Bed Frame, make a final inspection that all joints and parts are fully and securely attached.

I. ATTACHMENT OF BED FRAME TO BED CABINET.

Using the lifting hardware (compressed pneumatic/hydraulic rods and other hardware fitting), follow the installation instructions to securely connect the bed frame and the bed cabinet together. This process requires at least 3 (three) adults.

You may need to - LIGHTLY slide forward-backward to adjust and create gap space so as to enable the Pistons to be hooked to both ends of the hanging bolts in the Inner Wall of the L-BRACKET

Fully Secure and Tighten these Bolts at each end of the Pistons.

J.) Attachment of Safety Latches.

Upon completion of Step I above, ensure the entire structure of Bed Frame to Cabinet is fully and securely attached as ONE UNIT - affix the Safety Latches.

These Latches are to be reachable by Adults Only. Thus, the minimum height shall be no less than 5feet (1.5m) from ground.

K.) Warning for Selecting a Mattress

Recommended Mattress weight (55)lb or (25)kg / Recommended Mattress thickness (6)in or (15)cm - Your Murphy Bed is made having taken into consideration the Bed Frame Weight and Mattress weight to pair with the Pistons Newton Force.

Therefore, load your bed with the RECOMMENDED MATTRESS Weights, Size and Thickness as stated here in the assembly instructions.

DO NOT LOAD any heavier and or LARGER and or LIGHTER Mattress than what is recommended here.

L.) MATTRESS PLACEMENT.

Have 1 to 2 persons - place equal strengths to the handles and gently and securely, PULL DOWN the Bed Frame until the Bed Frame is horizontally and level to the ground.

Have the other 2 persons - carry and place the Mattress (**within the recommended weight** and **thickness)** and gently place the Mattress on to the Bed Frame.

M.) PISTON NEWTON-LOAD STRENGTH.

You are hereby reminded that when the BED FRAME is EMPTY OF MATTRESS, the Bed Frame may NEED a STRONGER force to be pulled down before you can place the Mattress.

This RESISTANCE to be PULLED DOWN is a normal characteristics of the Pistons Newton-Load force is “in action”.

N.) BED STRAP - GUIDE STRAP

Your Murphy Bed may or may not come equipped with a Bed Strap.

This Bed Strap serves as a GUIDE STRAP to help you lift the Bed Frame some 6 inches or so off its resting position. Then use both hands to FULLY LIFT HOIST the Bed Frame to its closing position.

SAFETY REMINDER :

1. **) DO NOT USE THE BED STRAP to PULL DOWN TO OPEN the BED FRAME from its CLOSED POSITION.**
2. **) DO NOT USE THE BED STRAP to PULL-LIFT-HOIST the BED FRAME from the OPENED-HORIZONTAL position, to the CLOSED POSITION.**

Both the above may cause injury and or unnecessary strain to your arm(s).

O.) USING YOUR MURPHY BED.

For EVERY USE - exercising Safety Precautionary Measures to ensure the safety of your family members and pets **are** IMPORTANT.

Therefore, PRIOR TO OPENING / PRIOR TO CLOSING OF YOUR MURPHY BED - Make sure all Children / Non Ambulatory Persons and Pets are at bay.

KEEP CHILDREN and NON-AMBULATORY persons from Unlatching the Safety Latches.

P.) CAUTION : DO NOT BE DISTRACTED During EVERY OPENING and CLOSING of your Murphy Bed.

Every time you Pull to **OPEN** the Murphy Bed from its closed position OR **Lift-Pull to CLOSE** the Murphy Bed to stow it into the Bed Cabinet -
. give these actions your focused and dedicated attention.
. DURING EVERY OPENING and CLOSING of your Murphy Bed - always ensure you have an Adult Partner close by for added assistance, where necessary.
. DO NOT OVER EXERT ADDED FORCE to OPEN the Bed or to CLOSE the Bedframe. For if you do, the resistance of the Piston will only make it harder for you to complete the task.
. TO CLOSE the Murphy Bed : depending on your height - stand some 6inches to 10inches away from the FootBoard edge. Use both your hands and place both hands at about equal distance from the middle of the Bed Frame, spaced at 2 to 3 feet between your hands - GENTLY LIFT-PULL to Close your Murphy Bed.
. TO OPEN the Murphy Bed : using equal force - **place your hands to the installed grab handle** and GENTLY PULL towards you to Open. **As you pull Open the Murphy Bed - proceed to move backwards, slowly and steadily, so as to give way to the Murphy Bed's OPEN Position.**

. During **EVERY OPENING or CLOSING** of the Murphy Bed - at about your hip level - you may find that you need to rotate your hand / wrist - take caution here to prevent injury.

. During EVERY OPENING and CLOSING, keep Children and Pets and Non Ambulatory Persons at bay.

. NEVER allow your children to treat this Murphy Bed as a Hide and Seek place of fun or jump on the bed.

. Care & Maintenance - Depending on the frequency of use of your Murphy Bed, it is recommended that you take precautionary Care and Maintenance. It is advisable to conduct NO LESS THAN 2 to 3 checks annually on these mounting points & pistons to ensure that these are securely bolted. Where necessary, use a vacuum cleaner to clear all dust and then wipe down with a damp cloth, then proceed with your maintenance work.

Safety Latches - Your Murphy Bed comes with the Safety Latch. These are to be attached at, both the TOP LEFT and TOP RIGHT hand upper portion**, minimum of 5 feet (1.5m) from ground**, of the Bed Frame / Bed Cabinet. Monitor and Inspect these frequently.

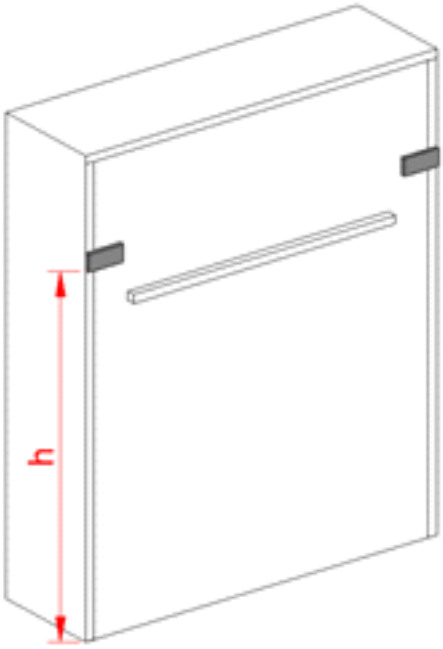

- Whenever NOT in use and after the Murphy Bed has been LIFTED and stowed in its **CLOSED POSITION - ALWAYS LATCH UP**.

Frequently Asked Questions.
Malfunctioned Pistons.

How do you know when the Murphy Bed's Piston has malfunctioned?
It would be quite evident in that :

a.) the Bed Frame may become LOPSIDED and
b.) the Lift-PULL force to CLOSE may be "heavier" than before.

IMMEDIATELY - STOP USING YOUR MURPHY BED.
SEEK and CONSULT professional maintenance service to ascertain the problem and repair and or have the pistons changed.

ASSEMBLY INSTRUCTION

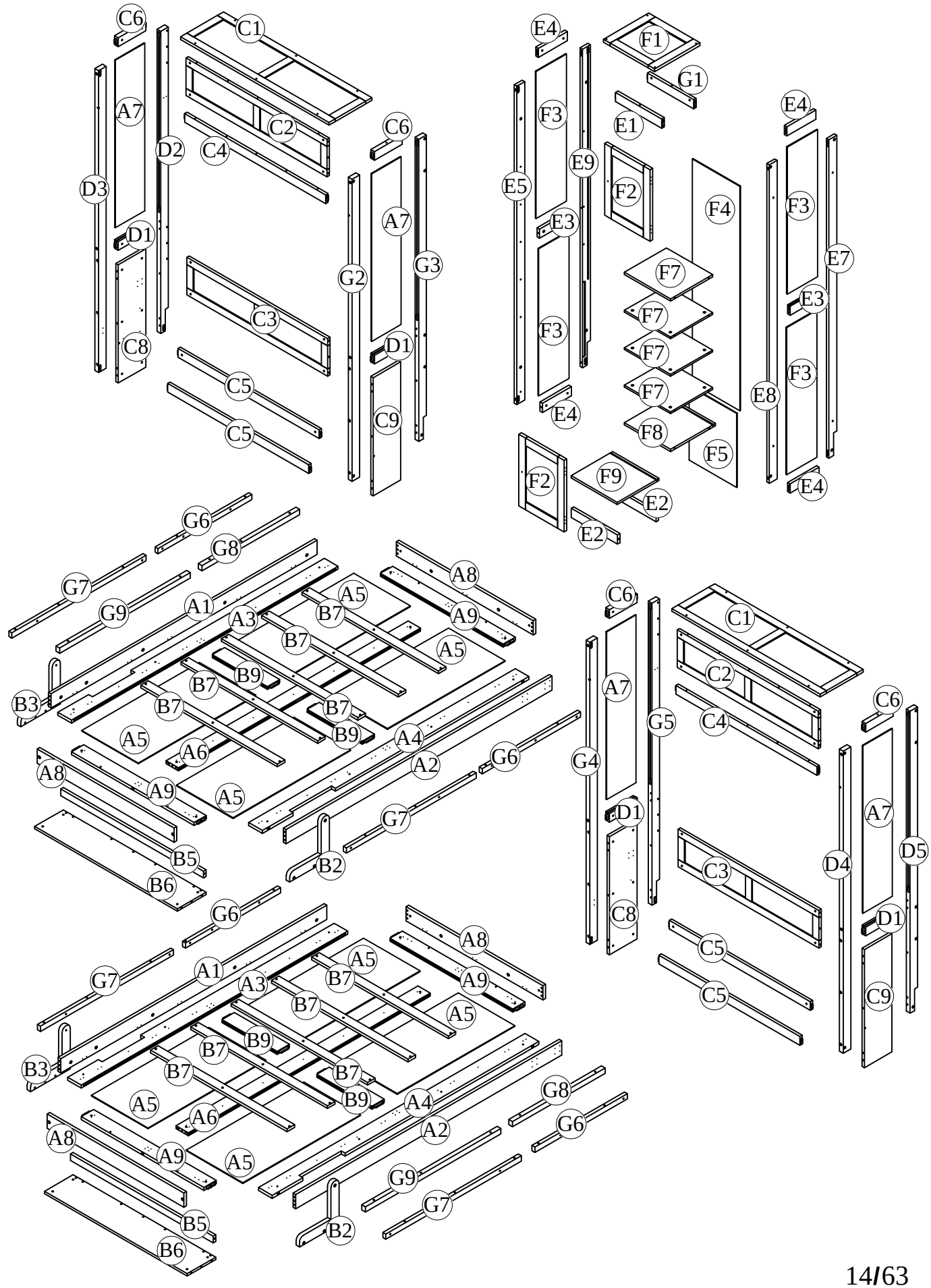

Part List (Box 1-N820P516080) & Hardware box

A1 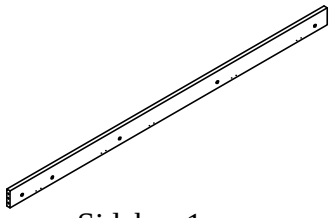 Sidebar-1pc	A6 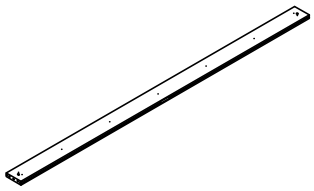 Centerbar-2pcs	A2 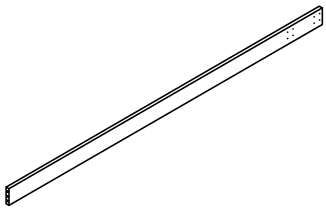 Sidebar-2pcs
F4  Back Panel-1pc	A3 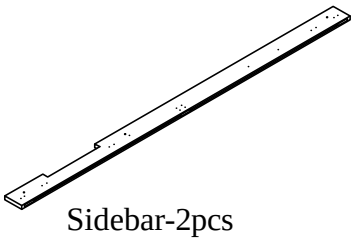 Sidebar-2pcs	C2 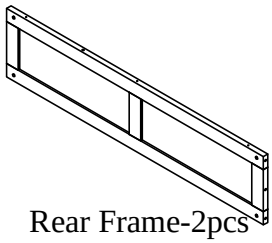 Rear Frame-2pcs
C3 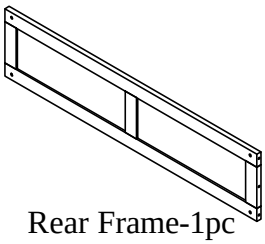 Rear Frame-1pc	B7 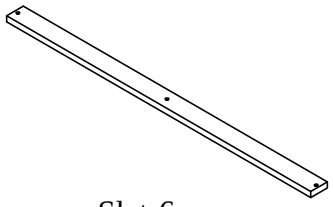 Slat-6pcs	

Part List (Box 2-N820P516081)

G5  Woodleg-1pc	G2 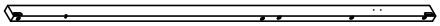 Woodleg-1pc	D5  Woodleg-1pc
E7  Woodleg-1pc	E8 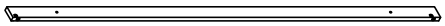 Woodleg-1pc	D3 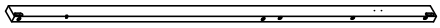 Woodleg-1pc
D2  Woodleg-1pc	G4 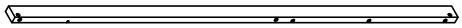 Woodleg-1pc	A7  Side Panel-2pc
G3  Woodleg-1pc	A4 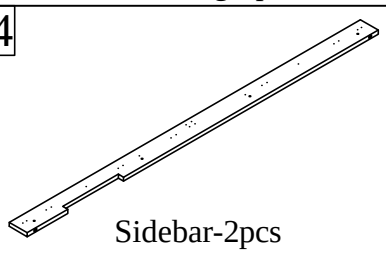 Sidebar-2pcs	E9  Woodleg-1pc
E5 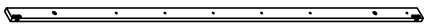 Woodleg-1pc	D4 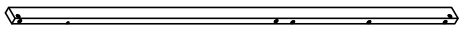 Woodleg-1pc	A1 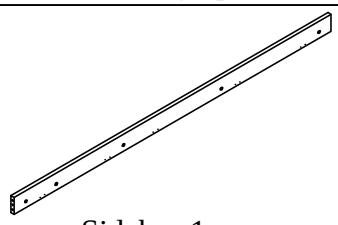 Sidebar-1pc
B7 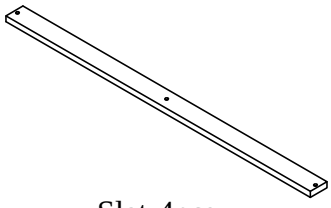 Slat-4pcs		

Part List (Box 3-N820P516082)

A8 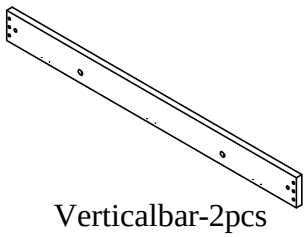 Verticalbar-2pcs	C1 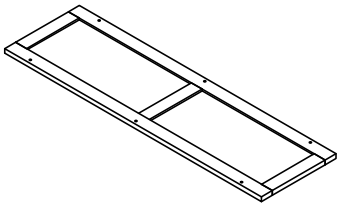 Top Frame-2pcs	C8 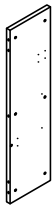 Left Panel-2pcs
E1 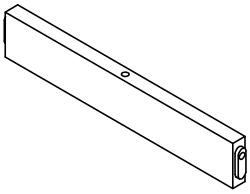 Crossbar-1pc	E2 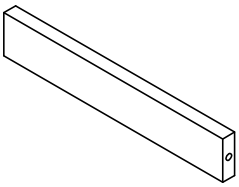 Crossbar-2pcs	E4 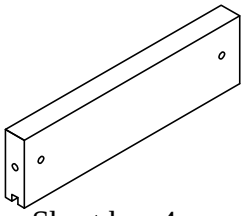 Short bar-4pcs
E3 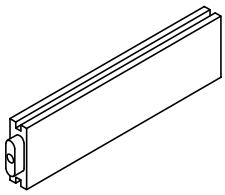 Short bar-2pcs	G1 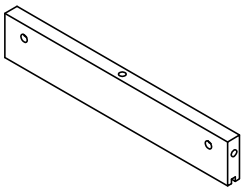 Crossbar-1pc	C3 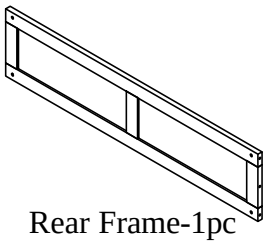 Rear Frame-1pc
C5 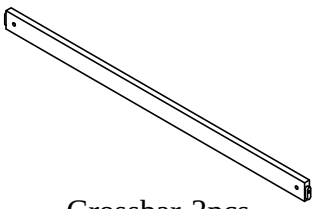 Crossbar-3pcs	C6 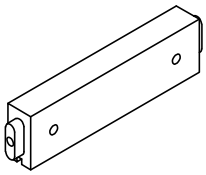 Short bar-4pcs	D1 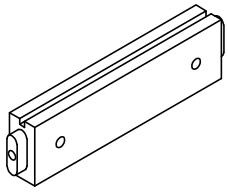 Shortbar-3pcs
B2 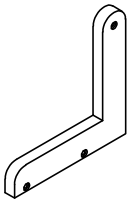 Woodleg-2pcs	B3 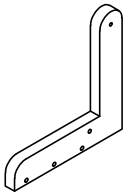 Woodleg-2pcs	A9 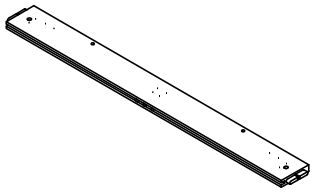 Verticalbar-3pcs
A5 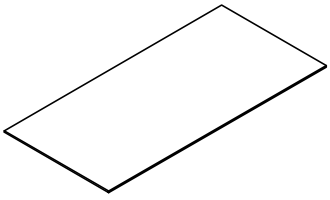 Front Panel-1pc	B9 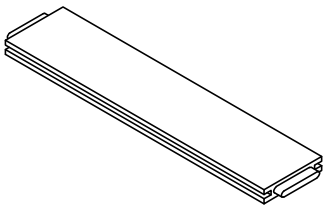 Centerbar-3pcs	C9 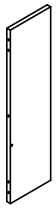 Right Panel-2pcs

Part List (Box 3-N820P516082)

F5 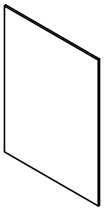 Back Panel-1pc	B5 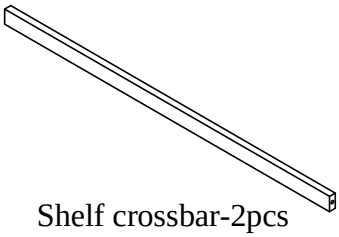 Shelf crossbar-2pcs	A7  Side Panel-2pcs
F1 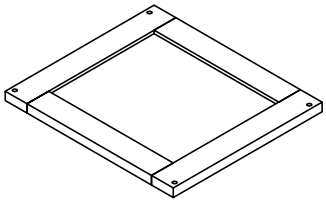 Door Frame-1pc		

Part List (Box 4-N820P516083)

G6 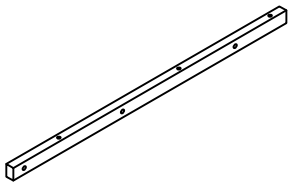 Slat support-4pcs	G7 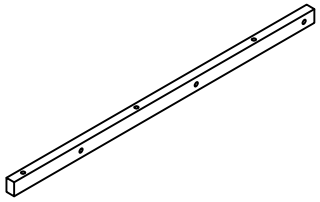 Slat support-4pcs	G8 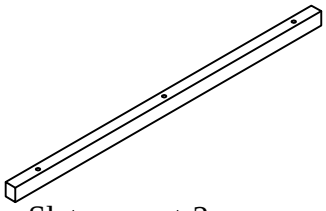 Slat support-2pcs
G9 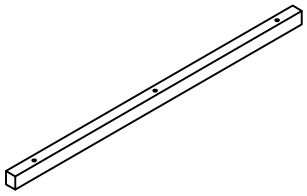 Slat support-2pcs	C4 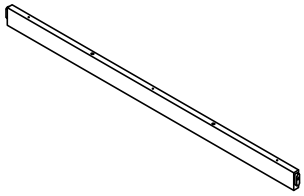 Crossbar-2pcs	A8 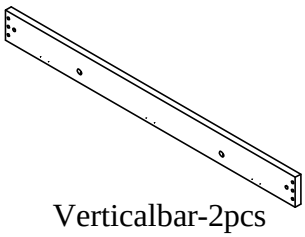 Verticalbar-2pcs
B6 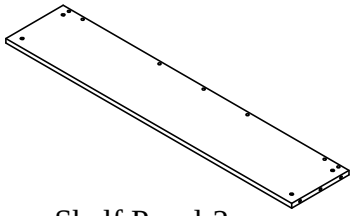 Shelf Panel-2pcs	C5 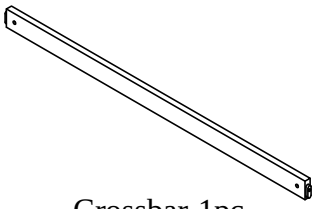 Crossbar-1pc	F8 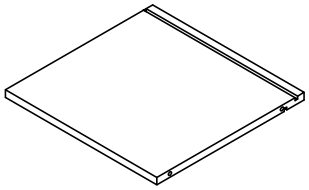 Shelf Panel-1pc
F9 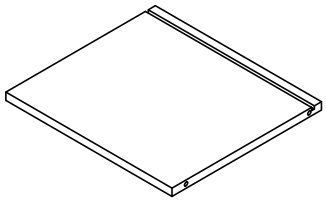 Bottom Panel-1pc	F7 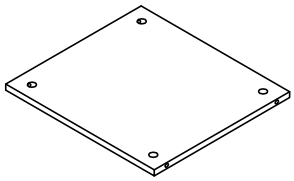 Shelf Panel-4pcs	D1 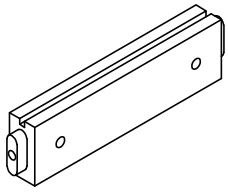 Shortbar-1pc
A5 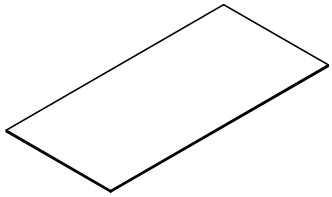 Front Panel-7pcs	B9 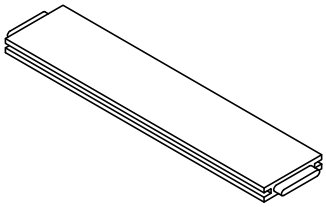 Centerbar-1pc	F3  Side Panel-4pcs
F2 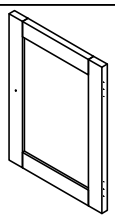 Door Frame-2pcs	A9 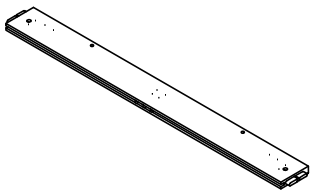 Verticalbar-1pc	

Hardware List (Box 1 N820P516080)

A 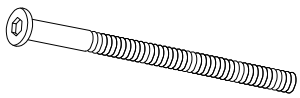 D13 x Ø1/4" x 100 mm Hex-Head bolts 42pcs	B  Ø1/4" x 12 mm Horizontal-Hole bolts 128pcs	C 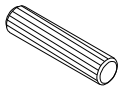 Ø8 x 30 mm Wood dowel 96 pcs
D 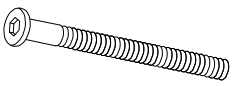 D13 x Ø1/4" x 70 mm Hex-Head bolts 34pcs	E 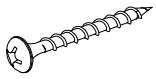 M4 x 30 mm Wood Screws 30pcs	F 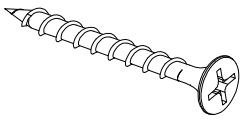 M4 x 40 mm Wood Screws 60pcs
G 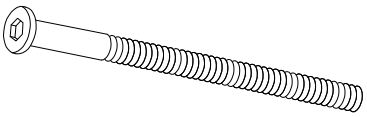 Ø1/4" x 120 mm Hex-Head bolts 8pcs	H  D13 x Ø1/4" x 60 mm Hex-Head bolts 44pcs	I 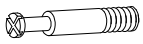 Cam Bolt-28pcs
J  Cam Lock-28pcs	K 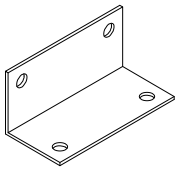 Angle Metal - 8pcs	M 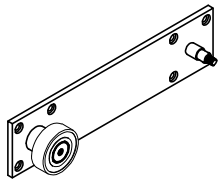 Metal straight link-4pcs
N 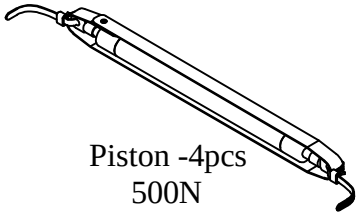 Piston -4pcs 500N	O 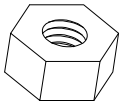 Nut-8pcs	P 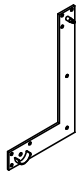 Metal corner link-2pcs
Q  Metal corner link-2pcs	R 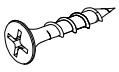 M4 x 15 mm Wood Screws 96 pcs	S 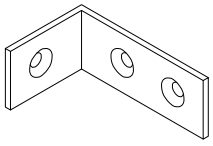 Angle Metal - 4pcs
T 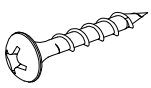 M4 x 15 mm Wood Screws 48 pcs	U 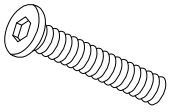 Ø1/3" x 40 mm Hex-Head bolts 4pcs	V  D15 x Ø1/4" x 15 mm T-nut 4pcs

Hardware List (Box 1 N820P516080)

W 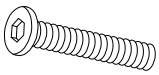 D13 x Ø1/4" x 35 mm Hex-Head bolts 4pcs	X  Ø20 / Ø6 x 2 mm Plastic Washer 4pcs	Y 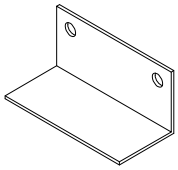 Angle Metal - 4pcs
CA 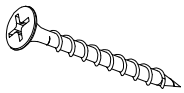 Screws D13 x 1/4" x 65 16pcs	DA 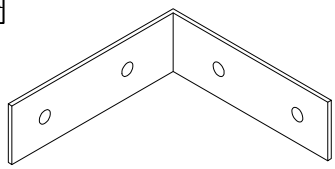 Angle Metal - 6pcs	EA 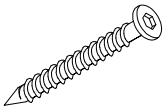 Screws D13 x 1/4" x35 34pcs
NA 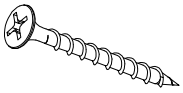 M4 x 25 mm Wood Screws 4pcs	HA 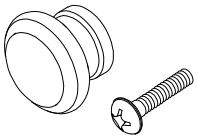 Ø4 x 25 - 2pcs Wood Handle - 2pcs	IA 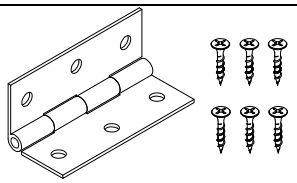 Hinge 4pcs / 3.5x15=24 pcs (1 hinge included 6 screws)
JA 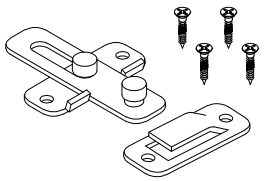 Metal link-4pcs / 3.5x15=16 pcs	KA 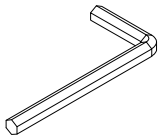 Allen Key 4pcs	MA 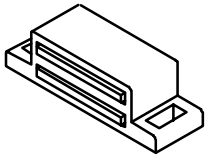 Magnet Door Catcher 2pcs
BA 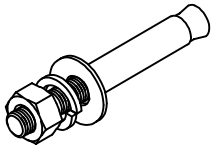 Ø6 x 75mm Iron wall socket - 16pcs	AA 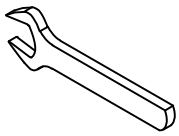 K10 Wrench - 1pc	BB 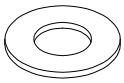 Ø18 / Ø6 x 1.5 mm Iron Washer 16pcs
CC 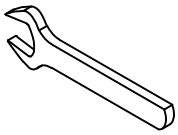 K13 Wrench - 1pc		

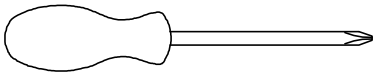

Assembly Tools Required (Not Included)

STEP1:

Installation video

KA	D	A	B	C
2pcs	1pcs	9pcs	10pcs	4pcs

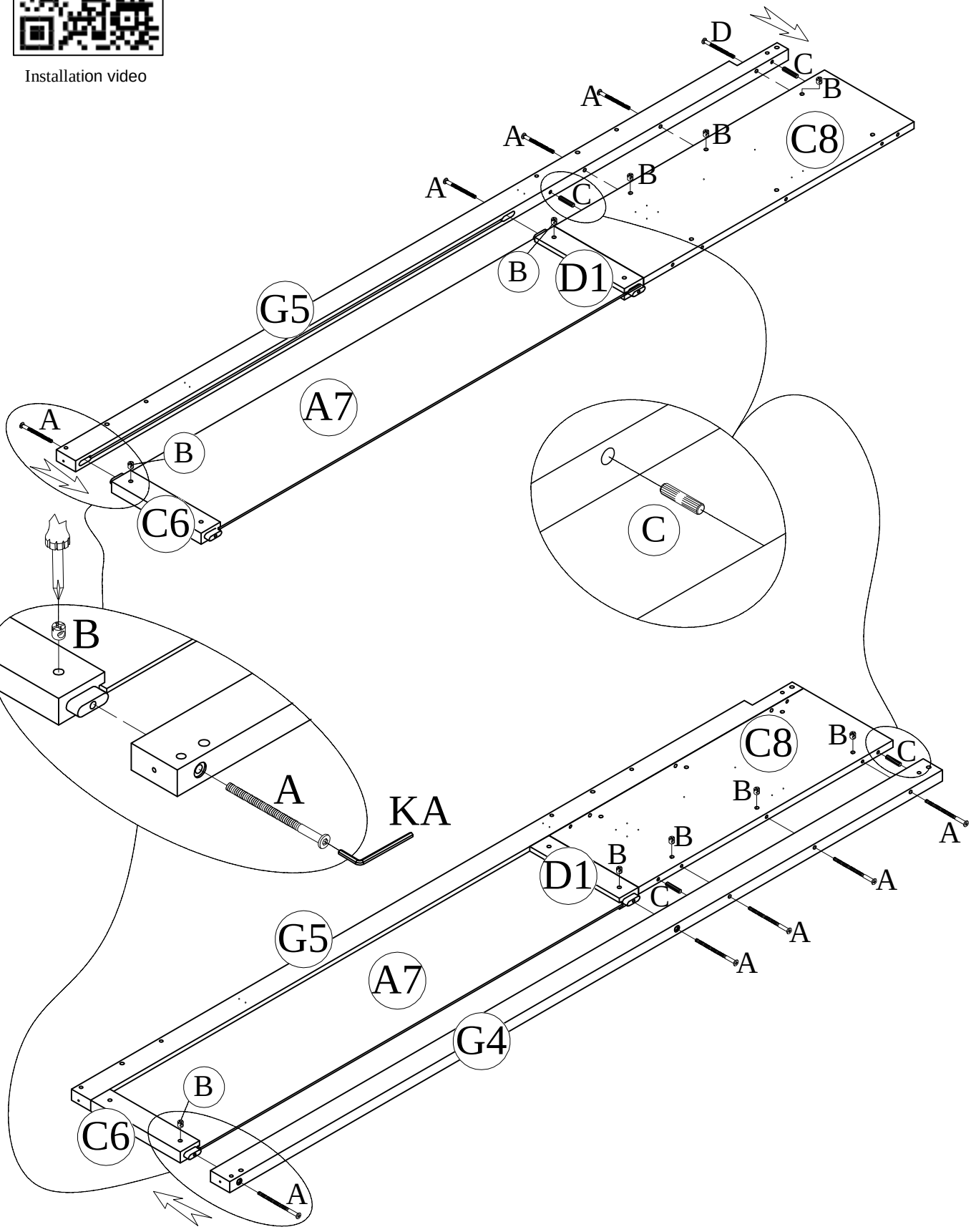

STEP2:

Installation video

KA	D	A	B	C
2pcs	1pcs	9pcs	10pcs	4pcs

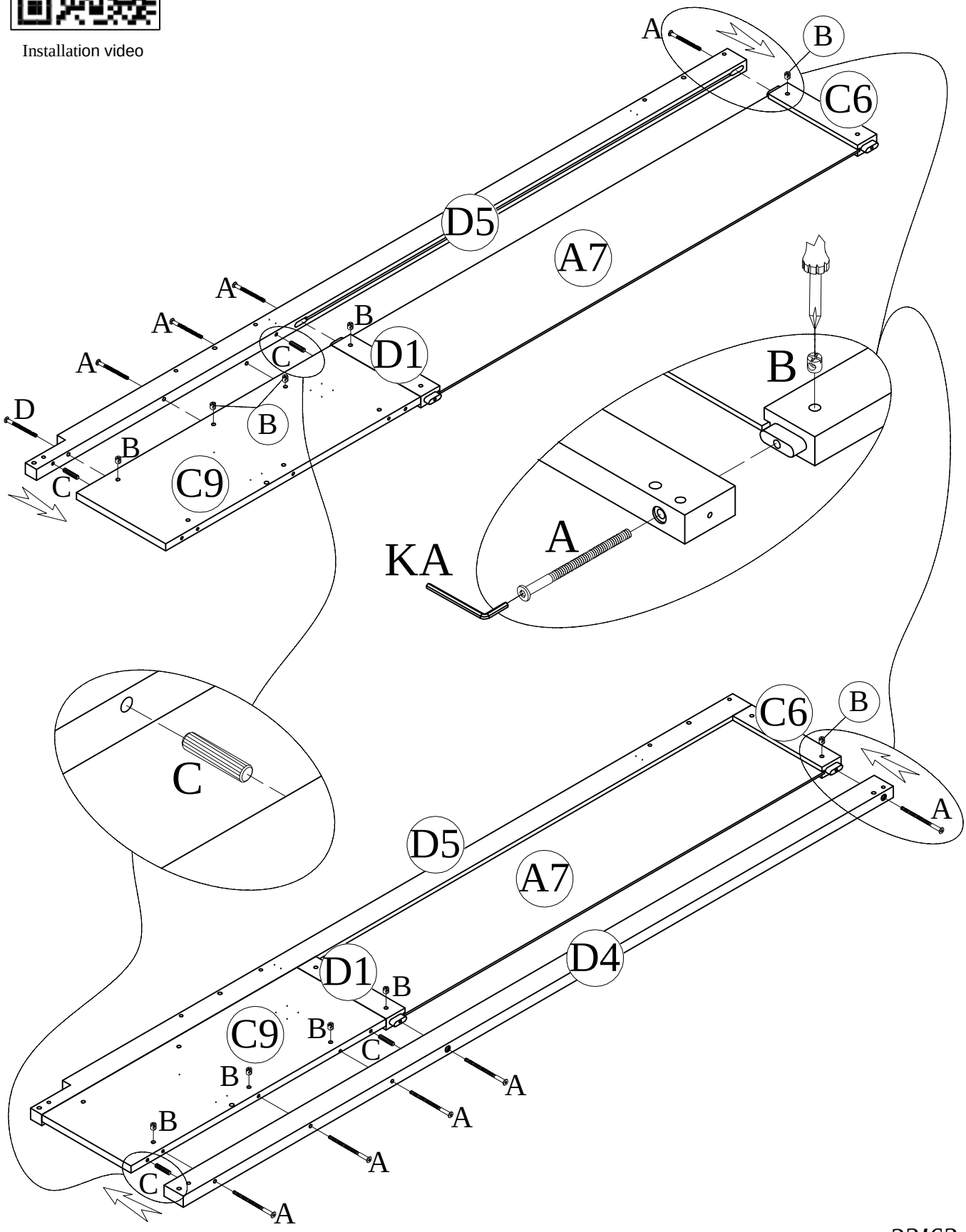

STEP3:

KA	D	A	B	C
2pcs	1pcs	9pcs	10pcs	4pcs

Installation video

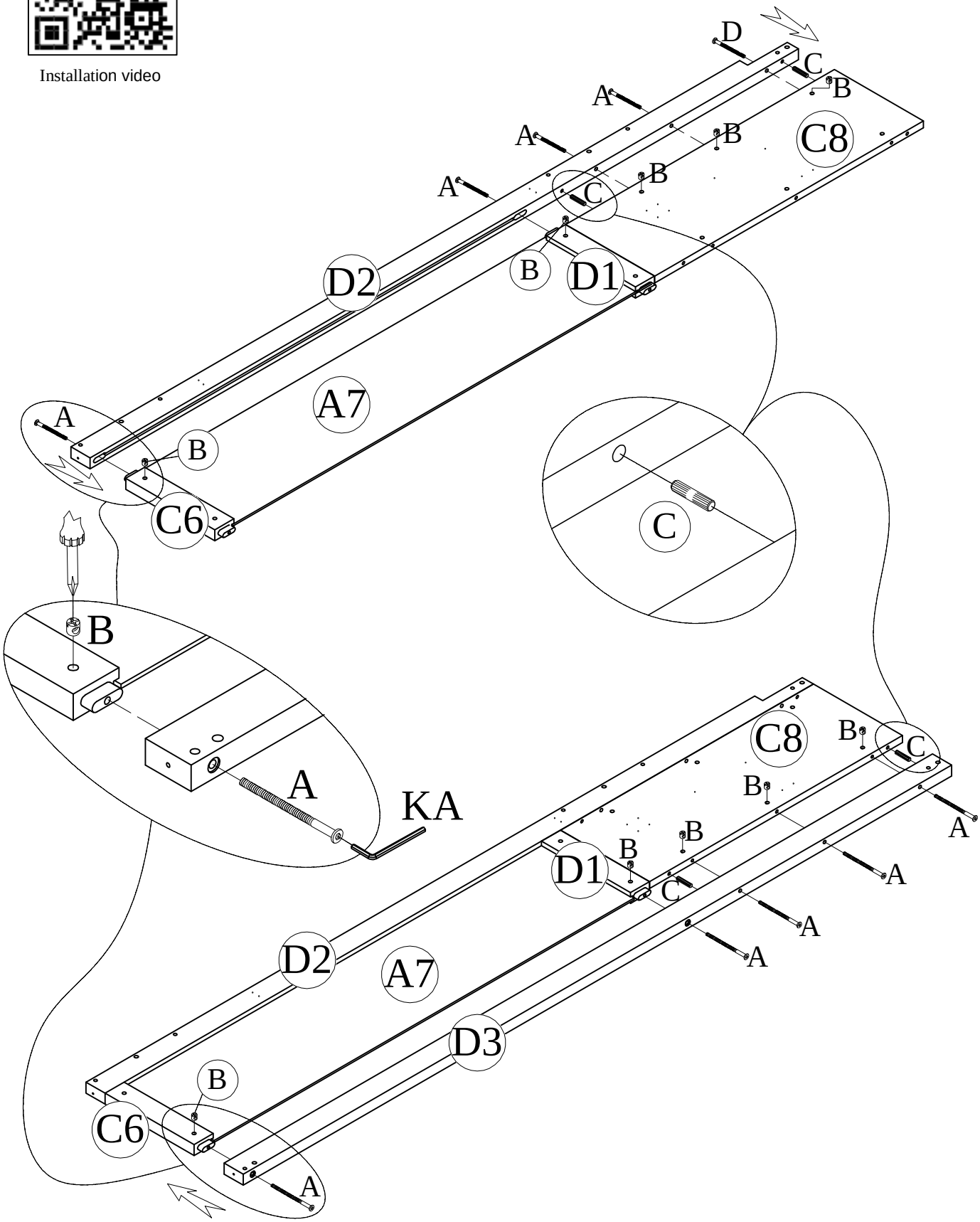

STEP4:

Installation video

KA	D	A	B	C
2pcs	1pcs	9pcs	10pcs	4pcs

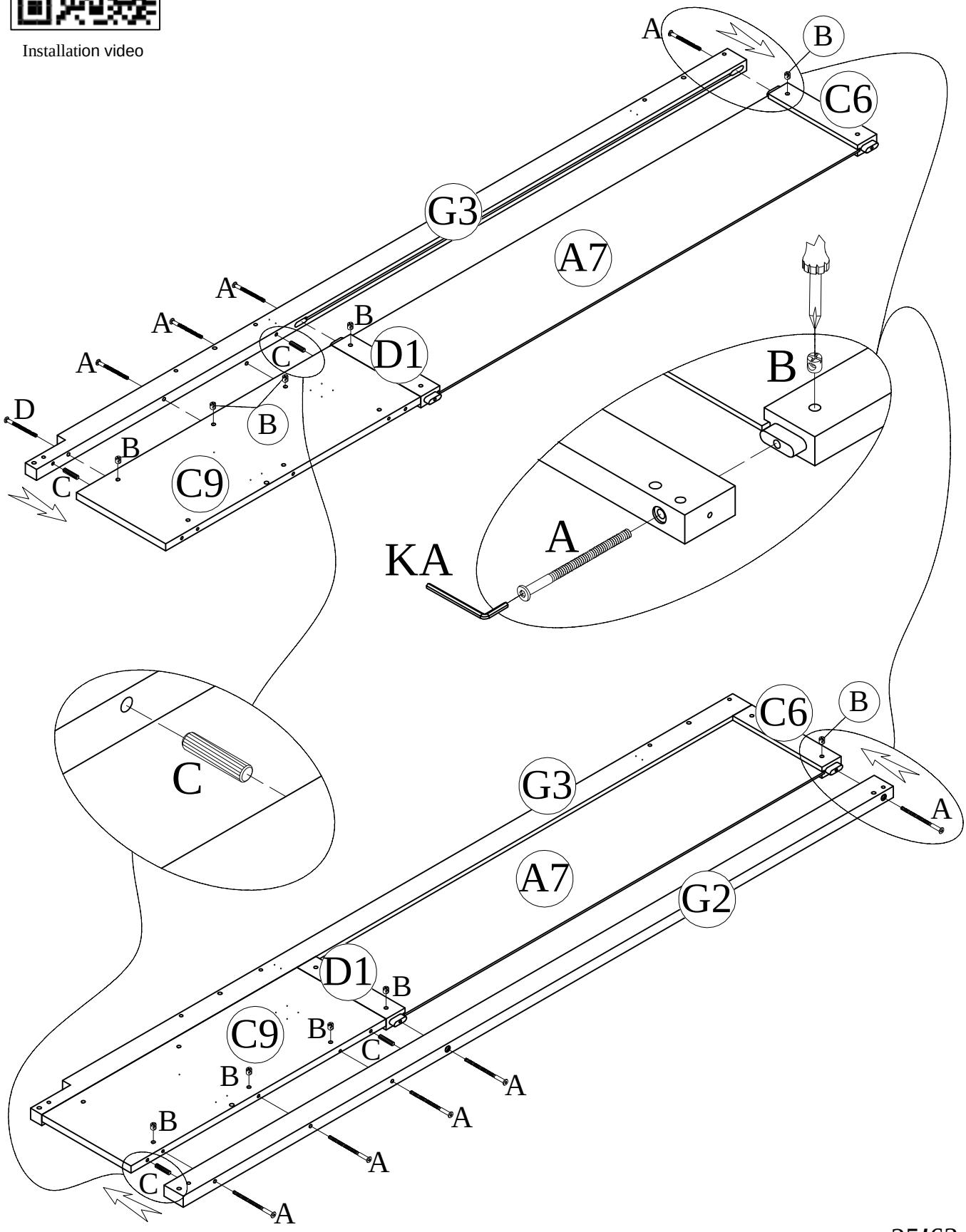

STEP5:

Installation video

B	D
	
14pcs	14pcs
KA	C
	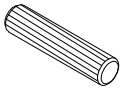
2pcs	10pcs

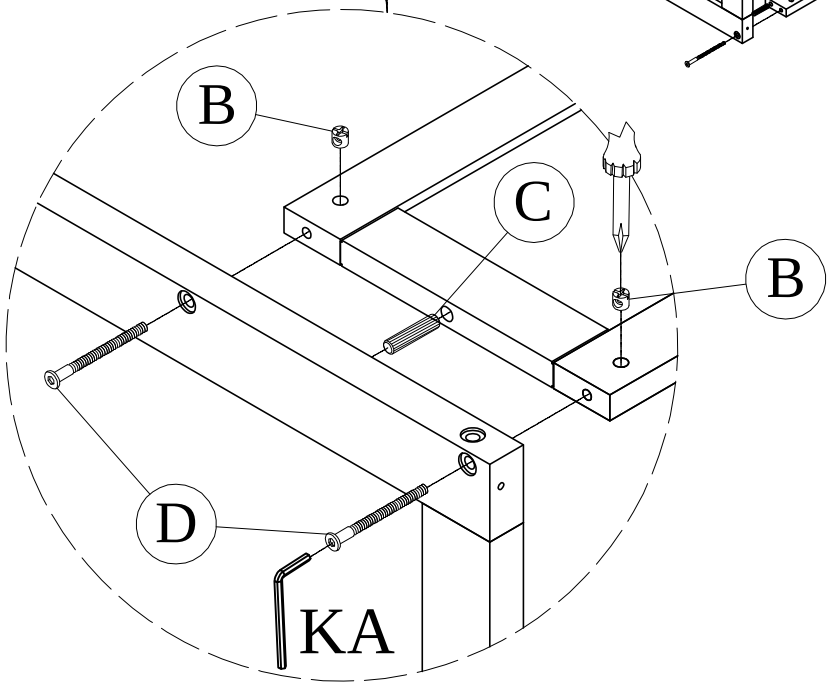

STEP6:

B	D
	
14pcs	14pcs
KA	C
	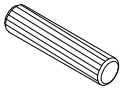
2pcs	10pcs

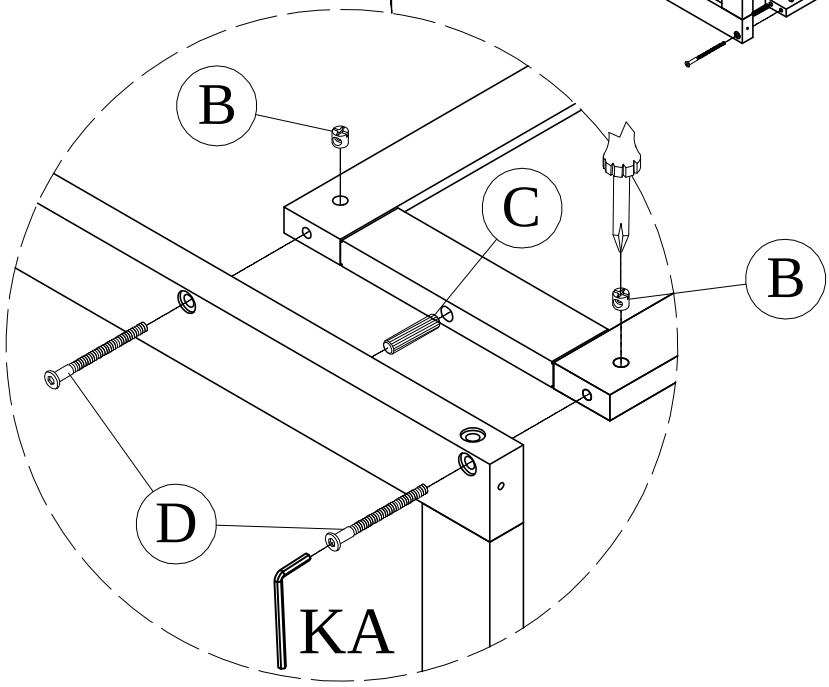

Installation video

STEP7:

Installation video

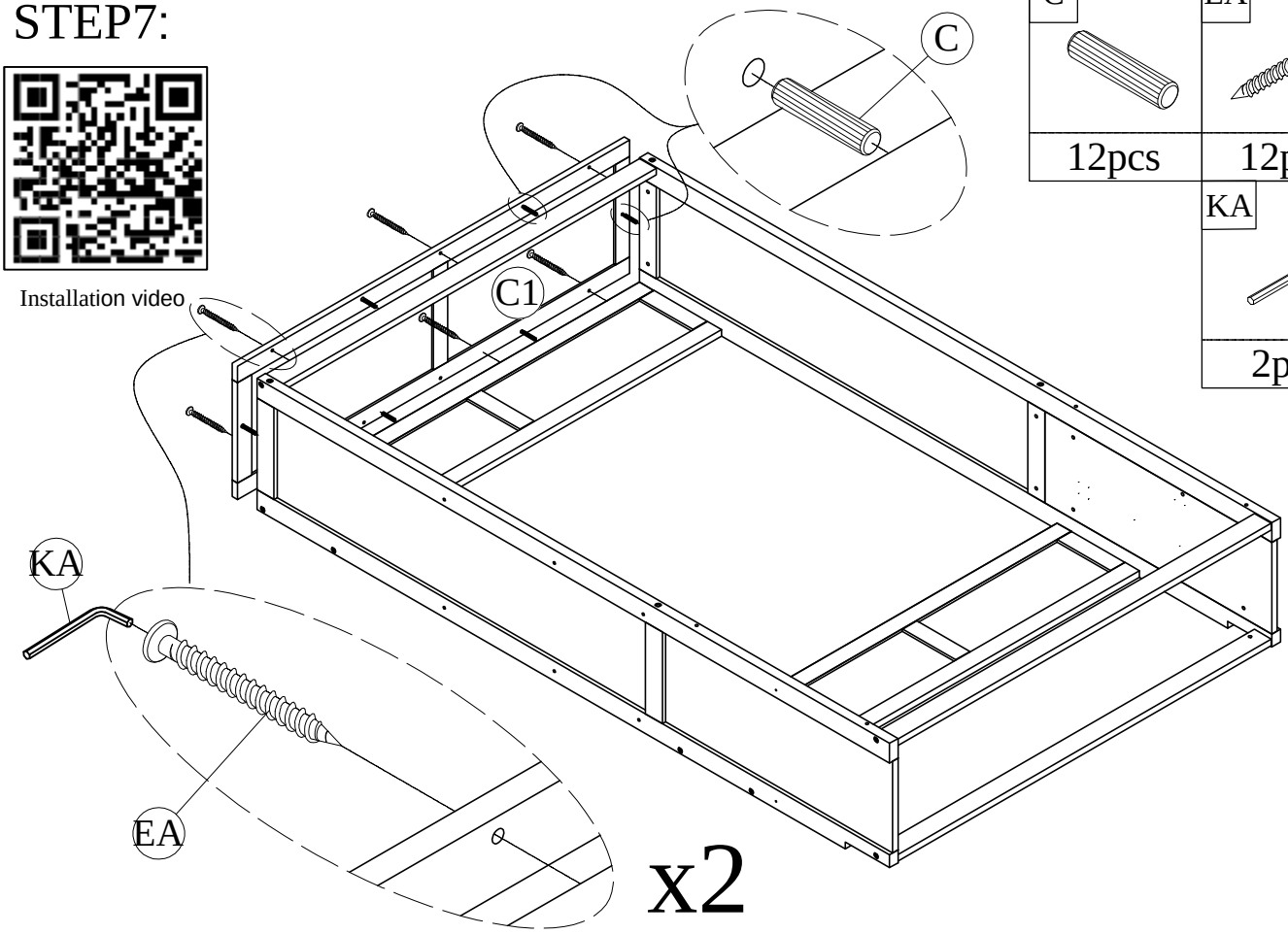

C	EA
12pcs	12pcs

KA
2pcs

STEP8:

Installation video

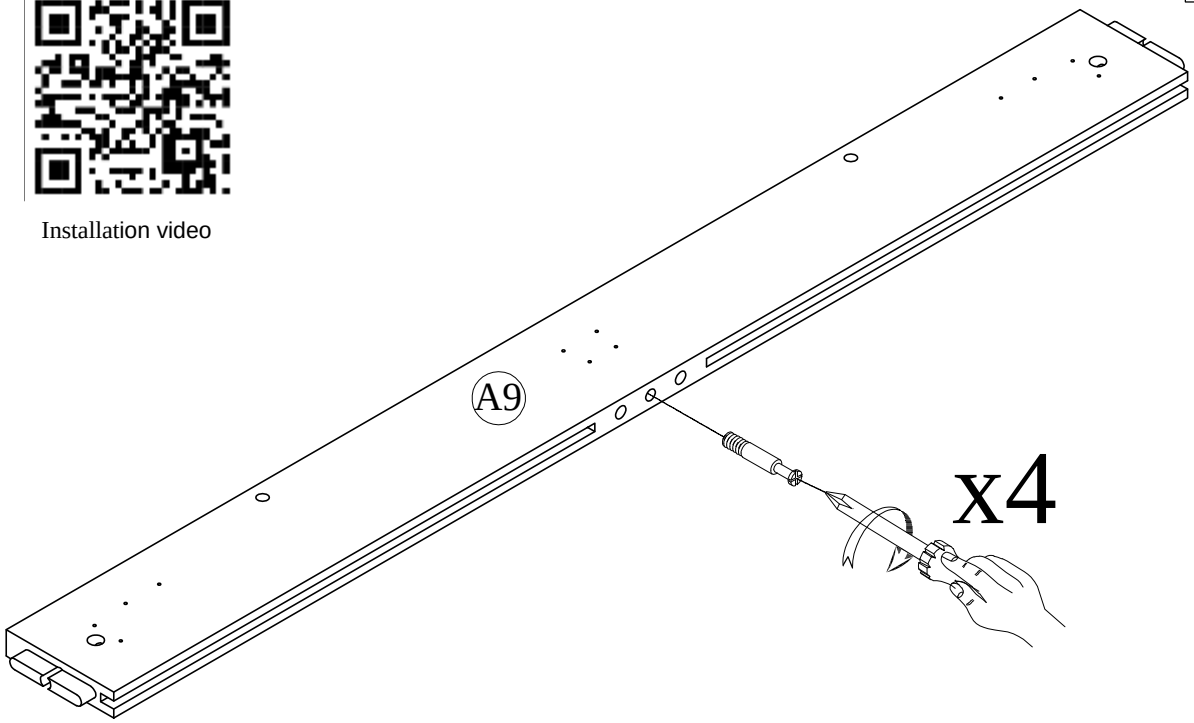

I
4pcs

STEP9:

x2

Installation video

C	J
8pcs	4pcs

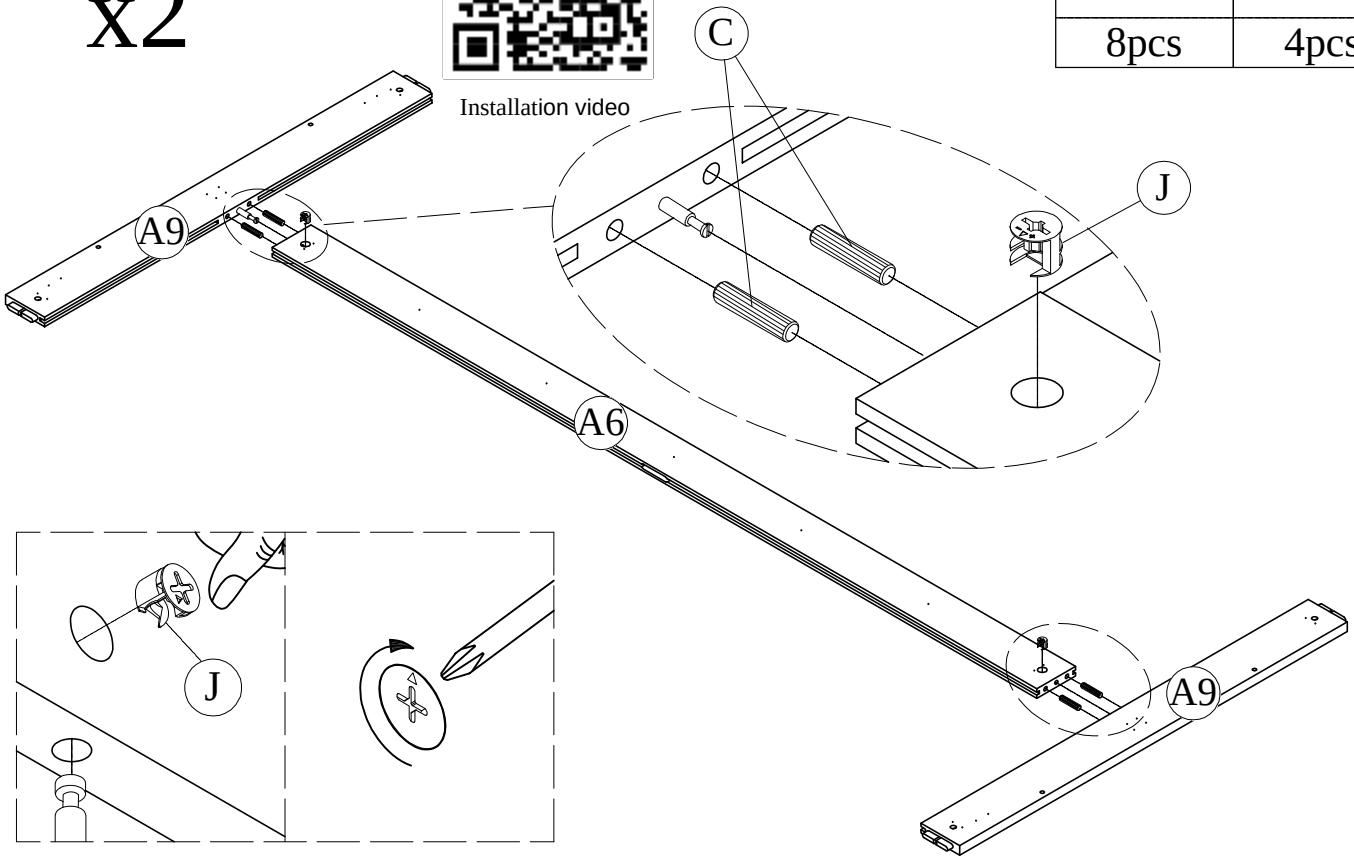

STEP10:

Installation video

T	B	G
8pcs	8pcs	8pcs

KA
2pcs

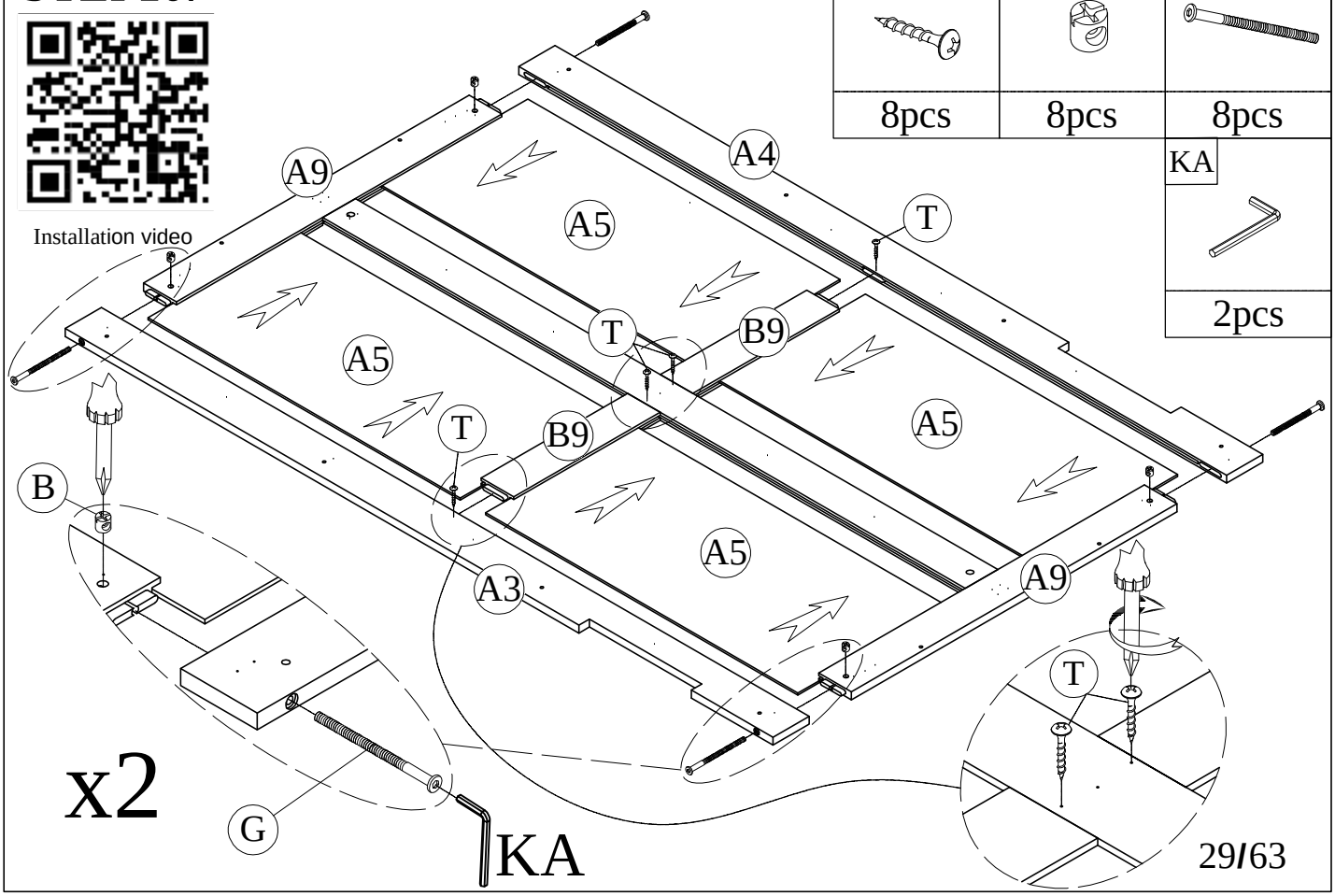

x2

STEP11:

Installation video

x2

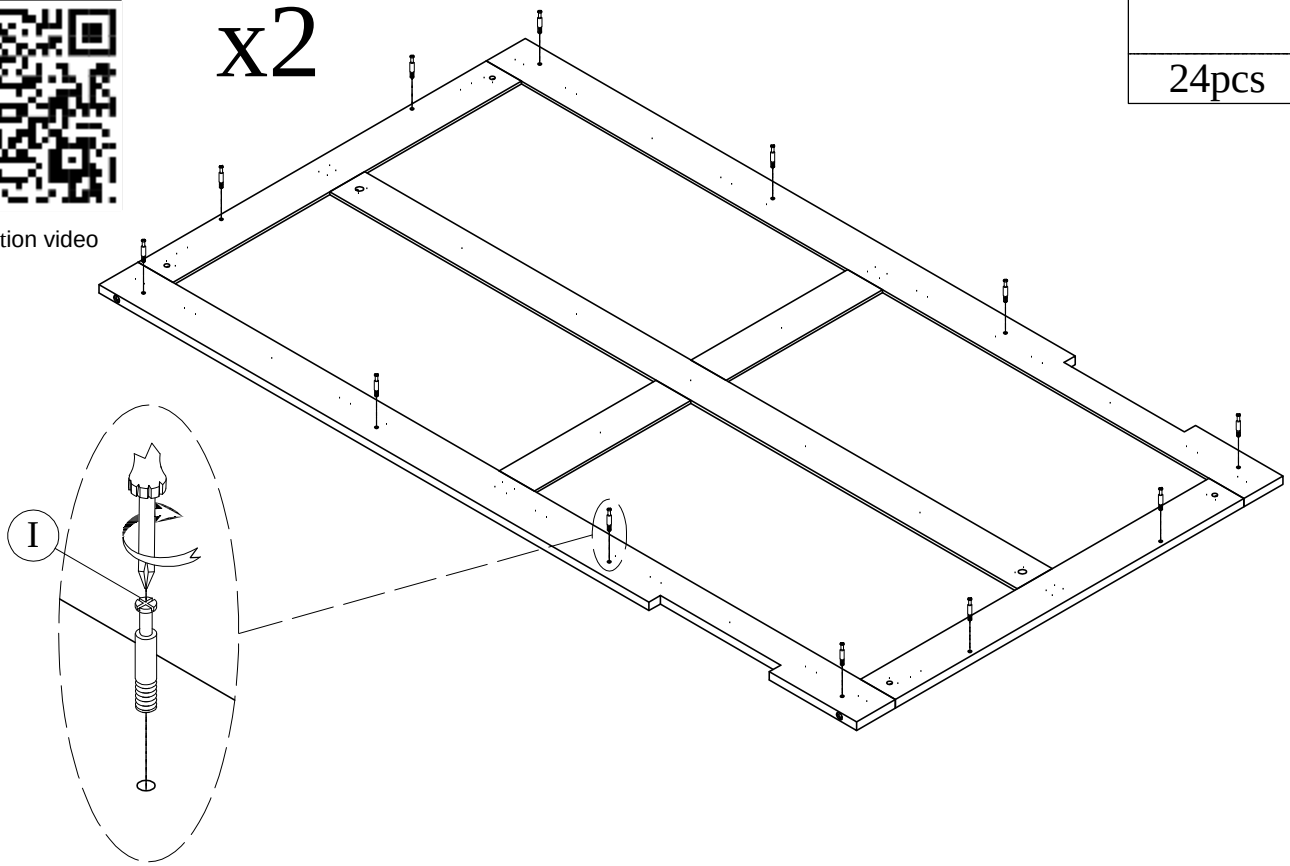

I
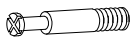
24pcs

STEP12:

Installation video

x2

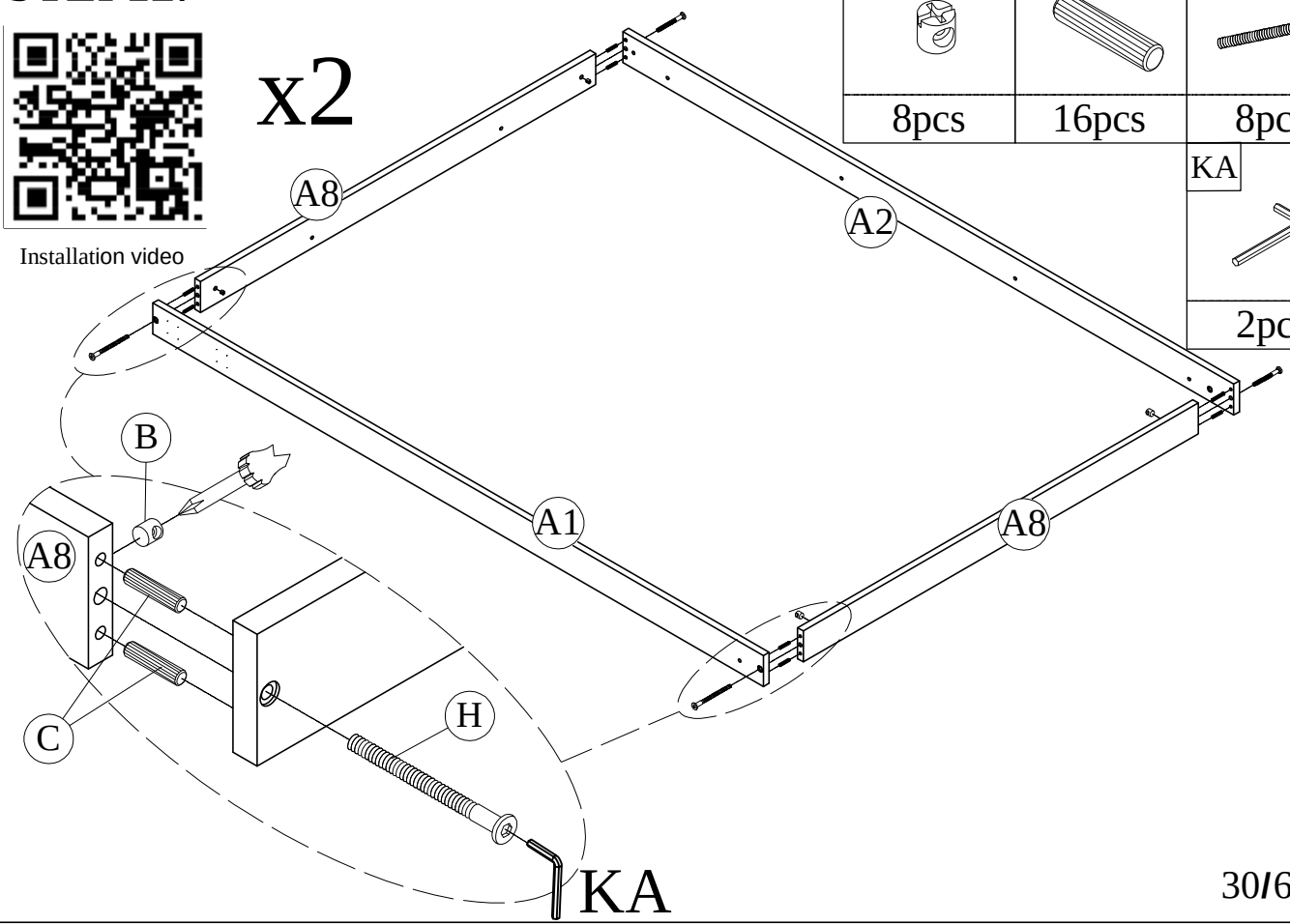

B	C	H
8pcs	16pcs	8pcs

KA
2pcs

STEP13:

Installation video

x2

J
24pcs

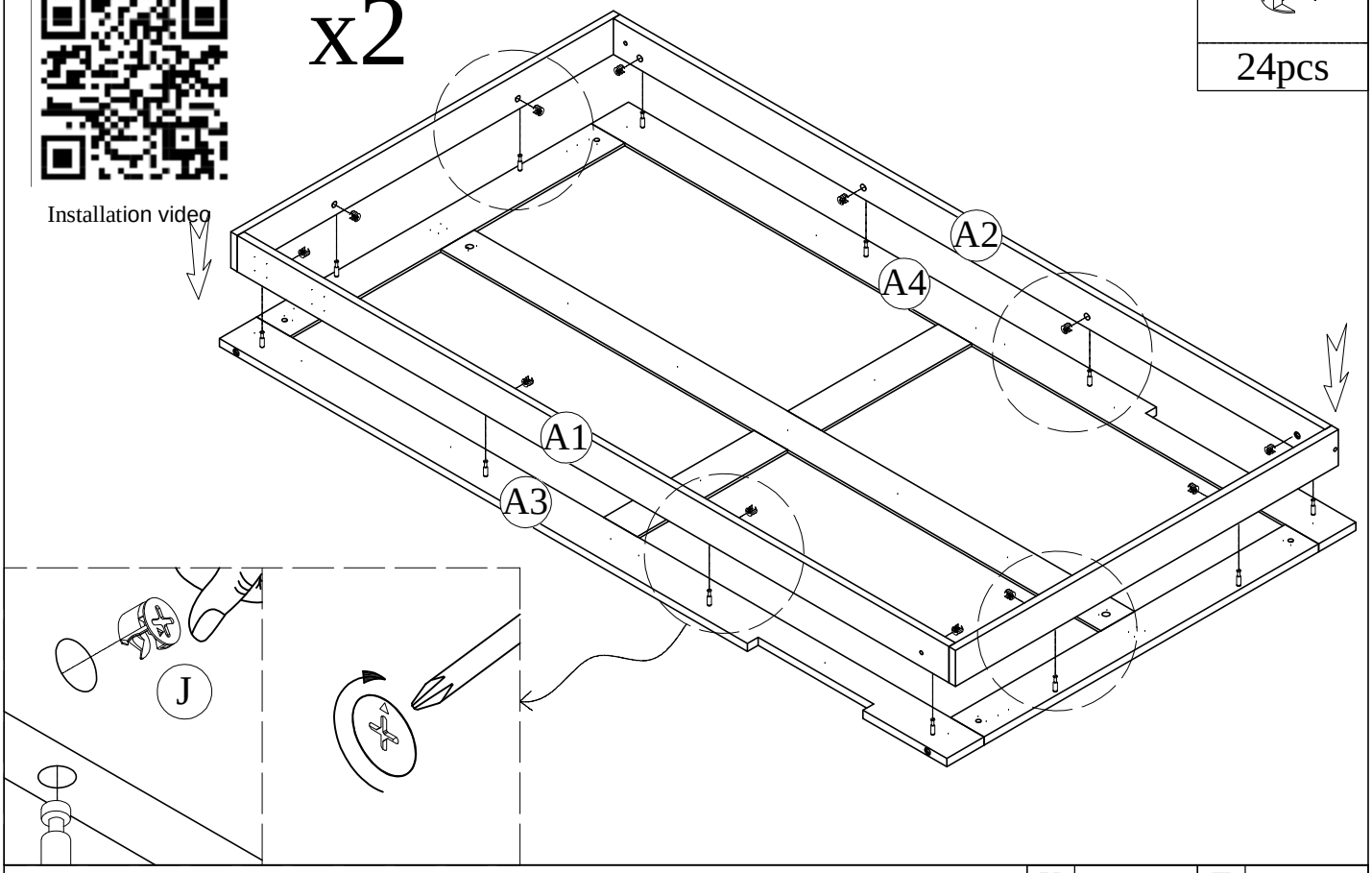

STEP14:

Installation video

x2

K	T
8pcs	32pcs

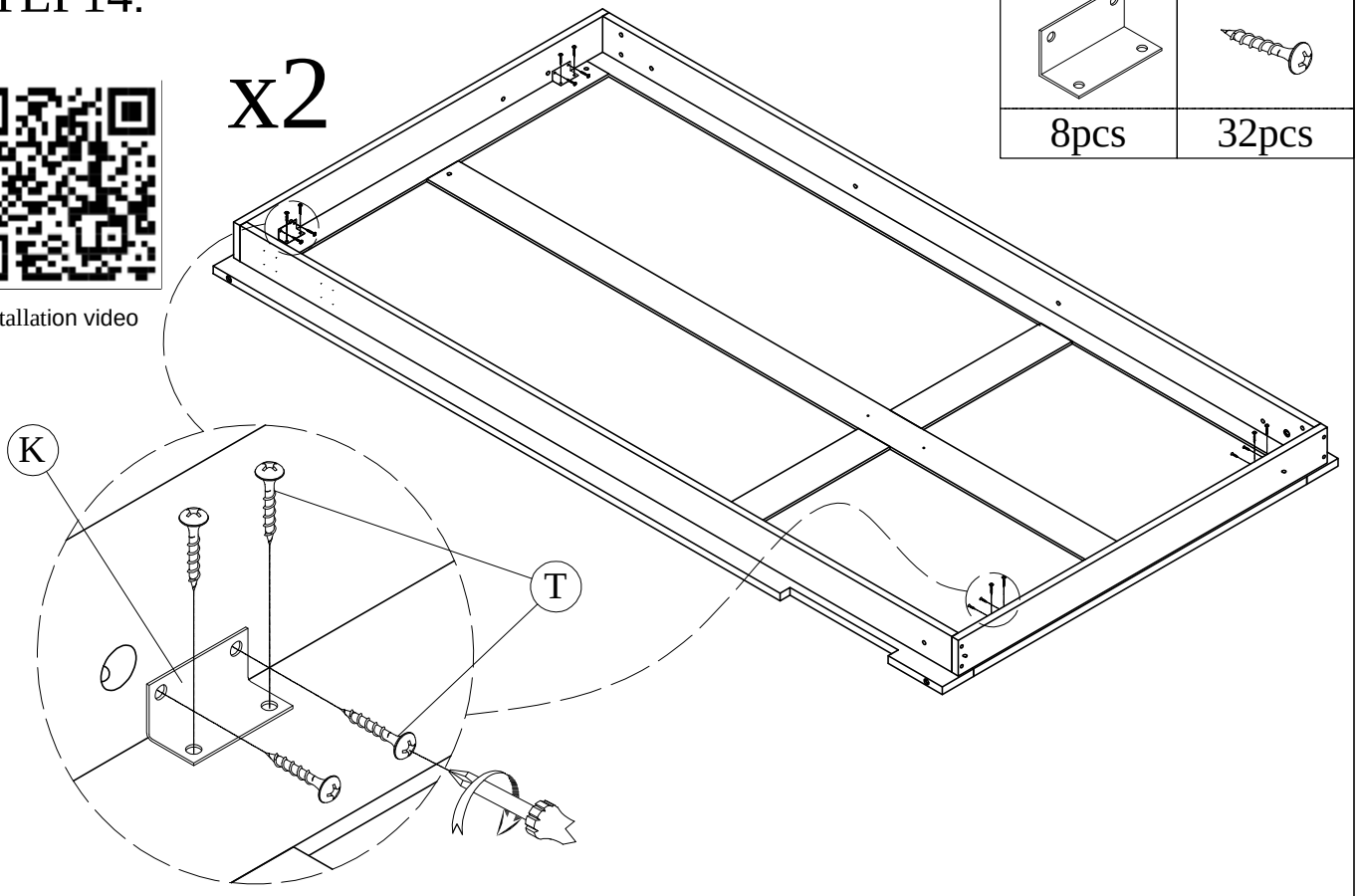

STEP15:

M	R
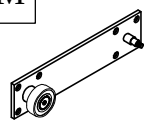	
4pcs	32pcs

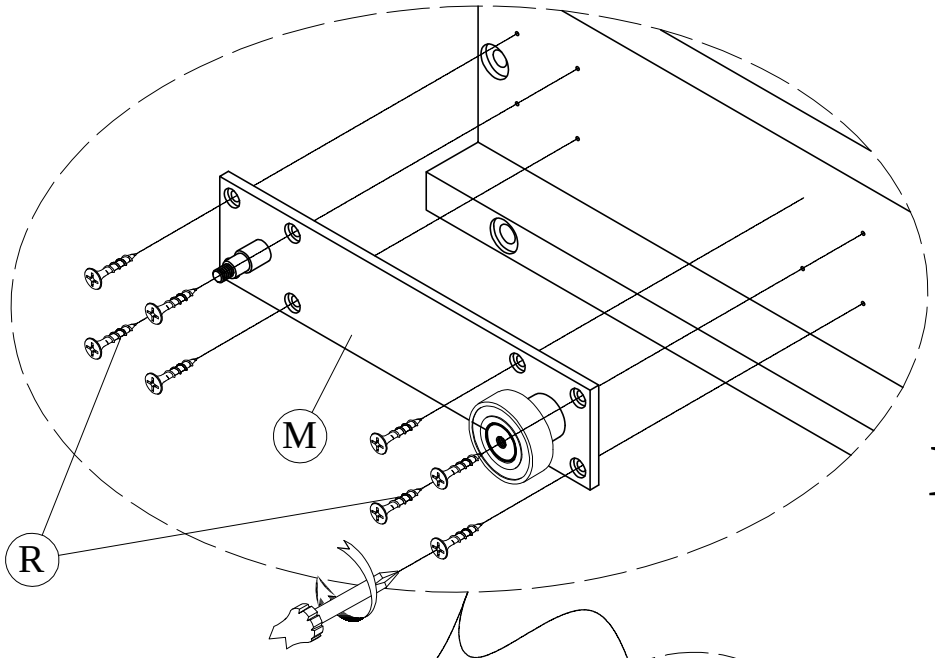

x2

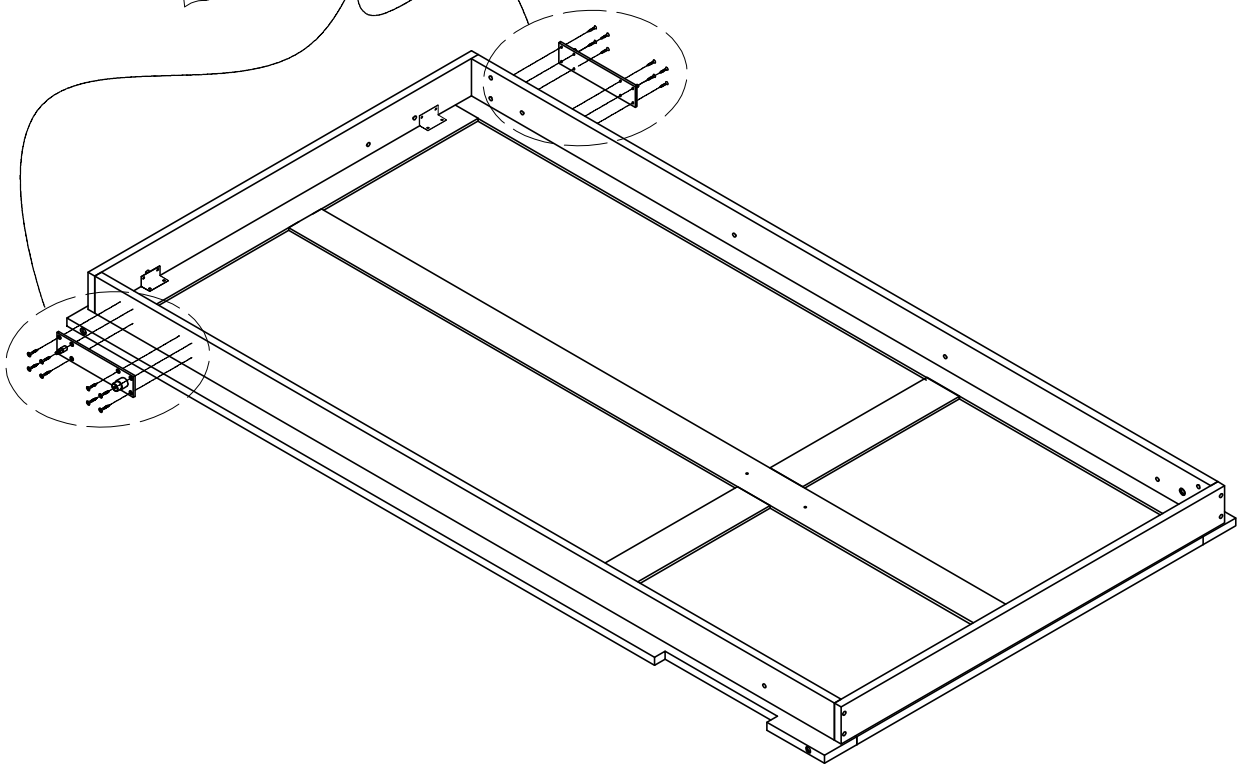

Installation video

STEP16:

N	O
4pcs	4pcs

CC
1pc

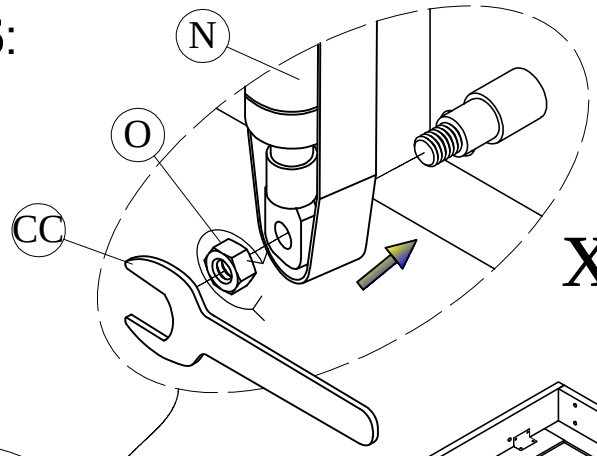

x2

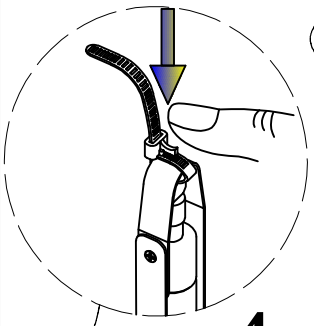

x4

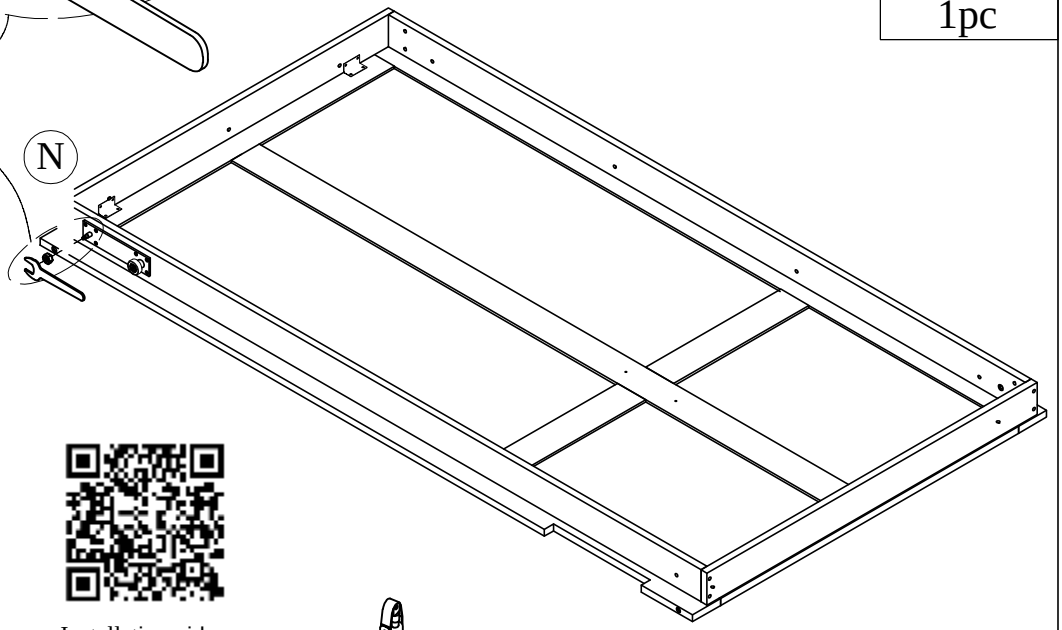

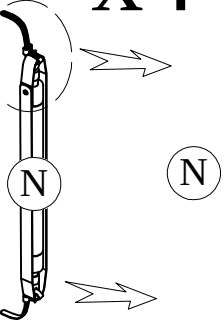

Installation video

Remove the pulleys from both ends of the piston.

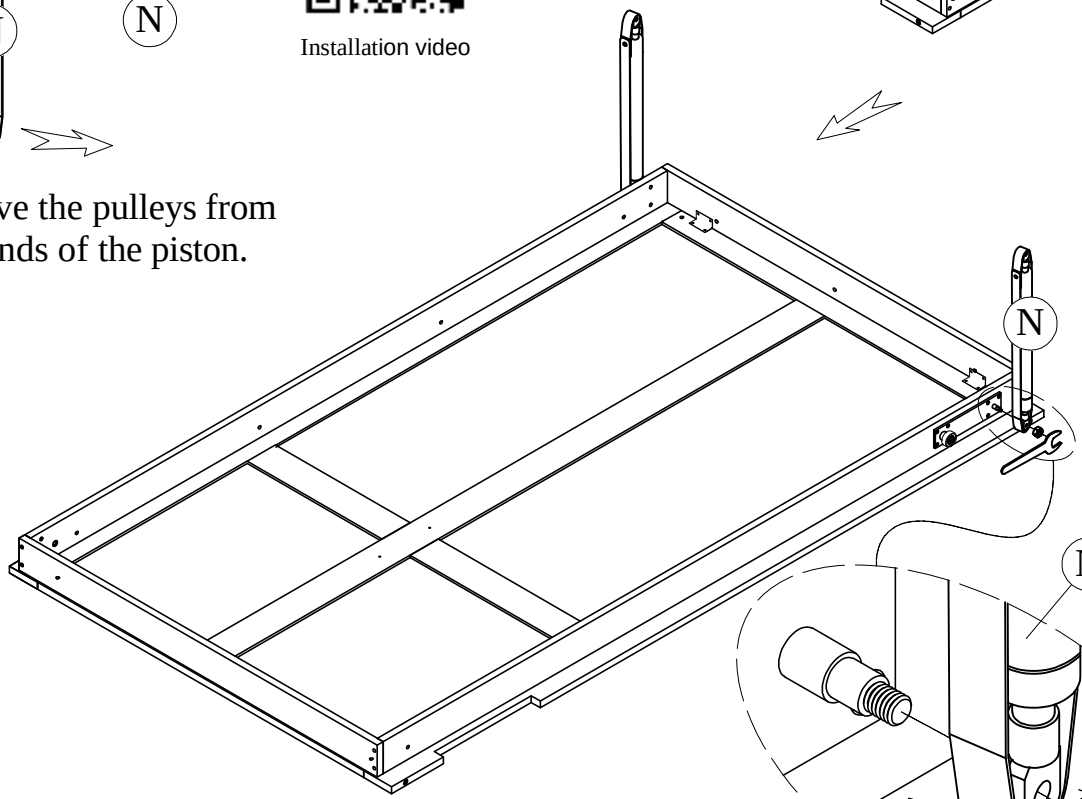

x2

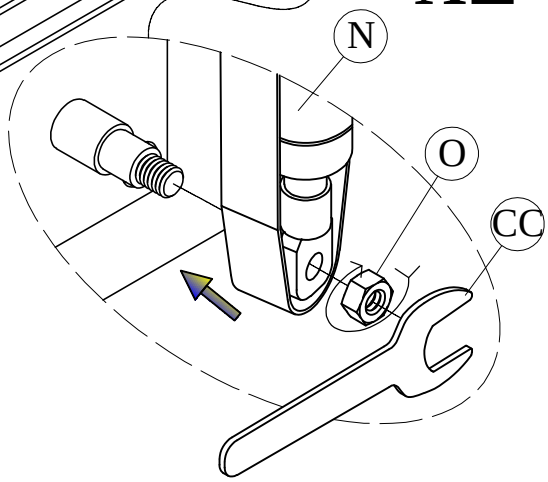

STEP17:

x2

Installation video

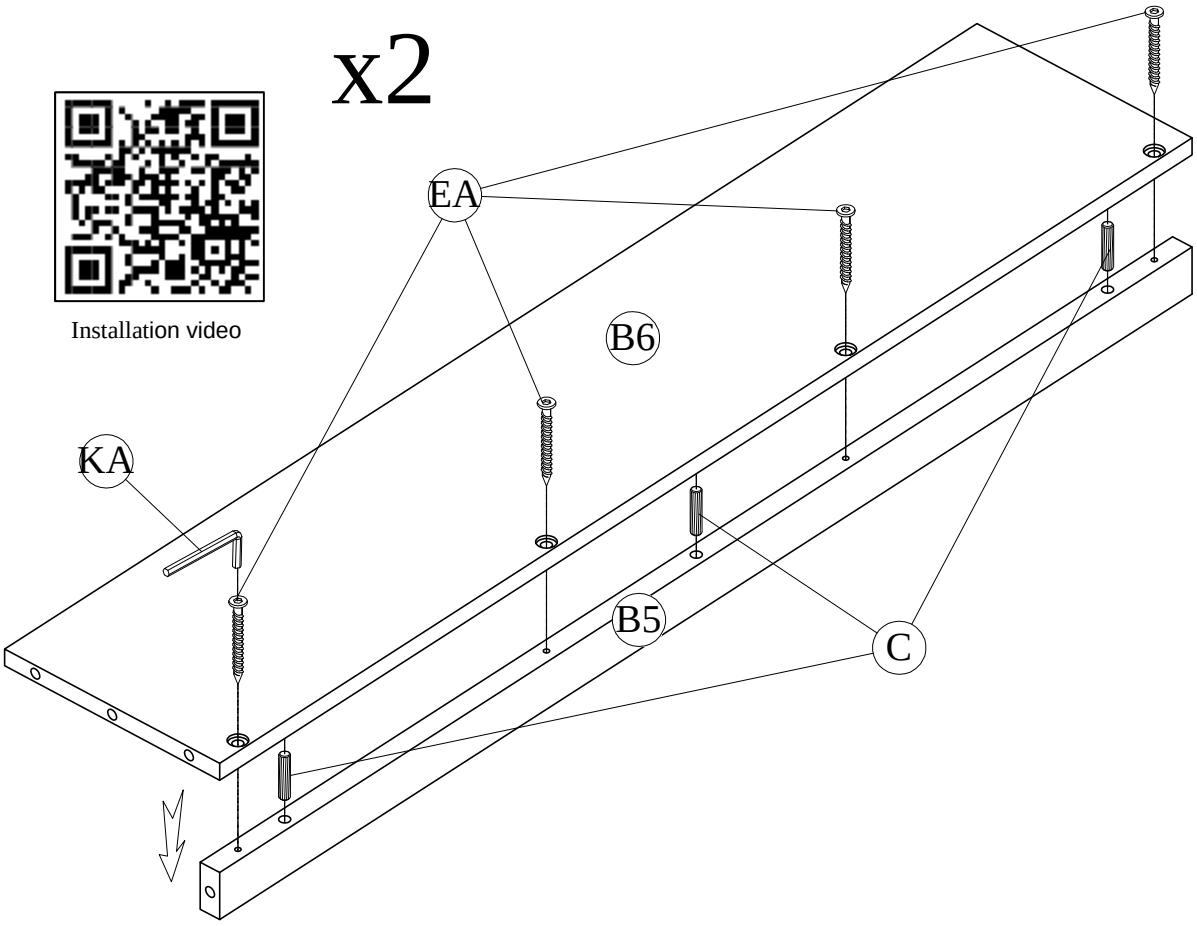

C

6pcs

EA

8pcs

KA

1pc

STEP18:

x2

Installation video

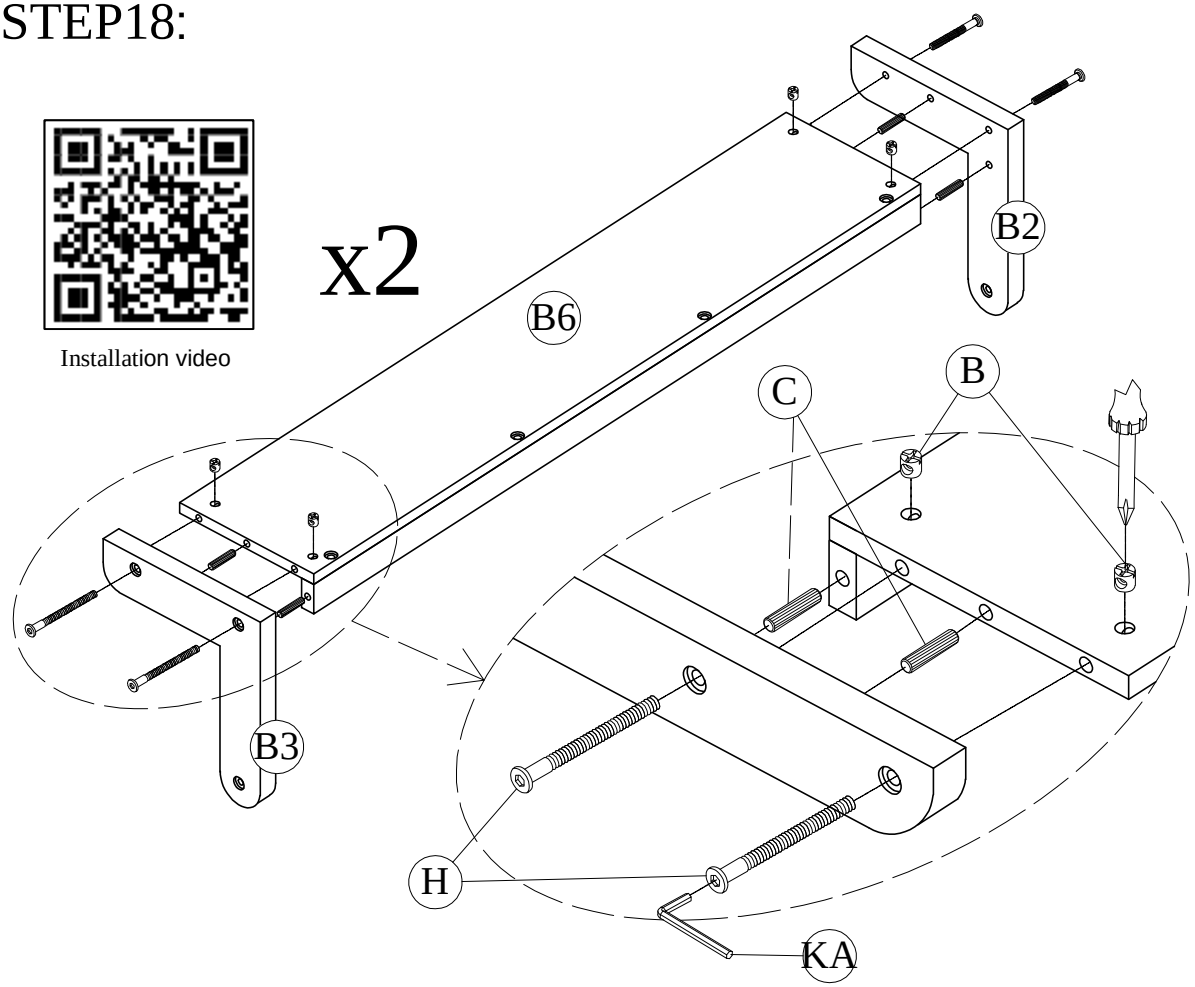

B

8pcs

C

8pcs

H

8pcs

KA

2pcs

STEP19:

V	W
	
4pcs	4pcs
KA	X
	
4pcs	4pcs

x2

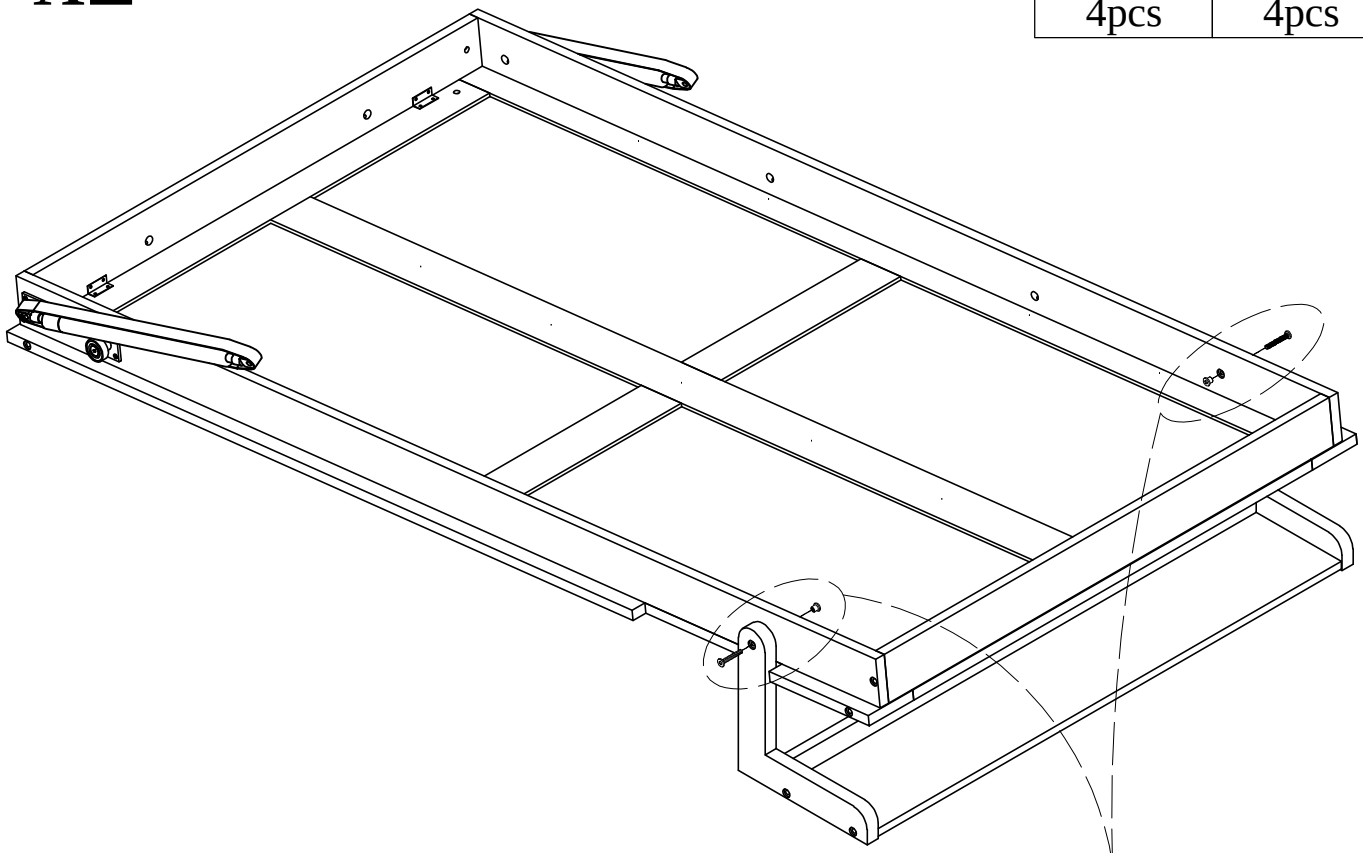

x2

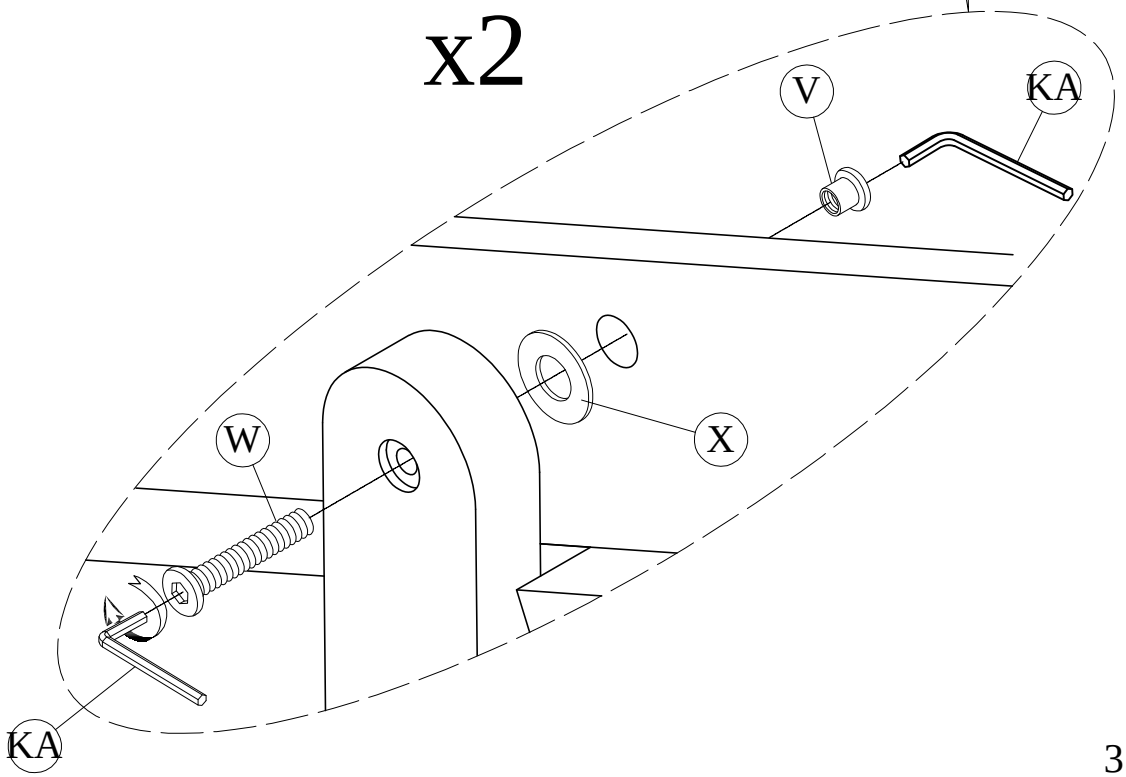

STEP 20:

F



60pcs

STEP 21:

E

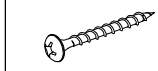

30pcs

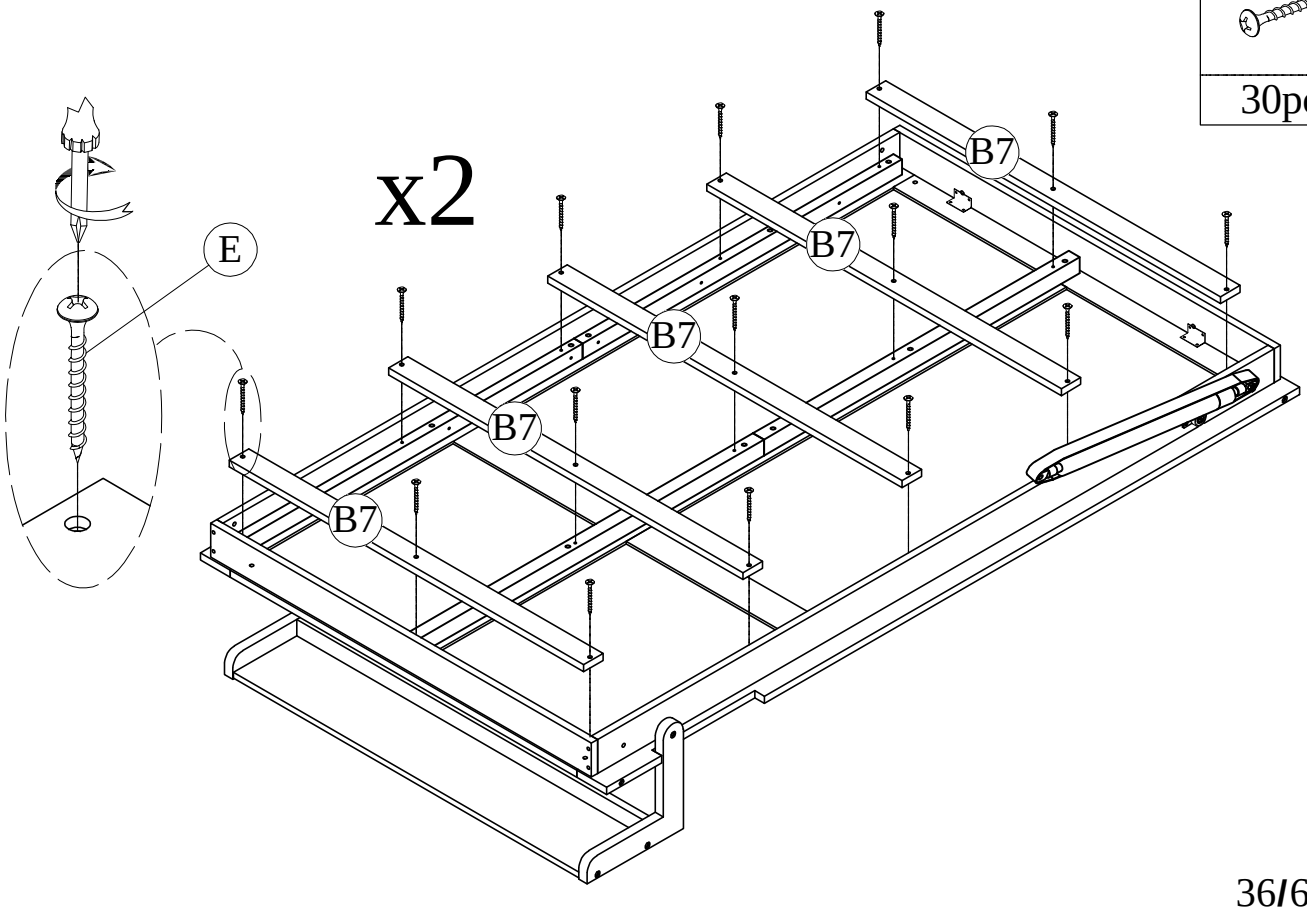

STEP22:

Installation video

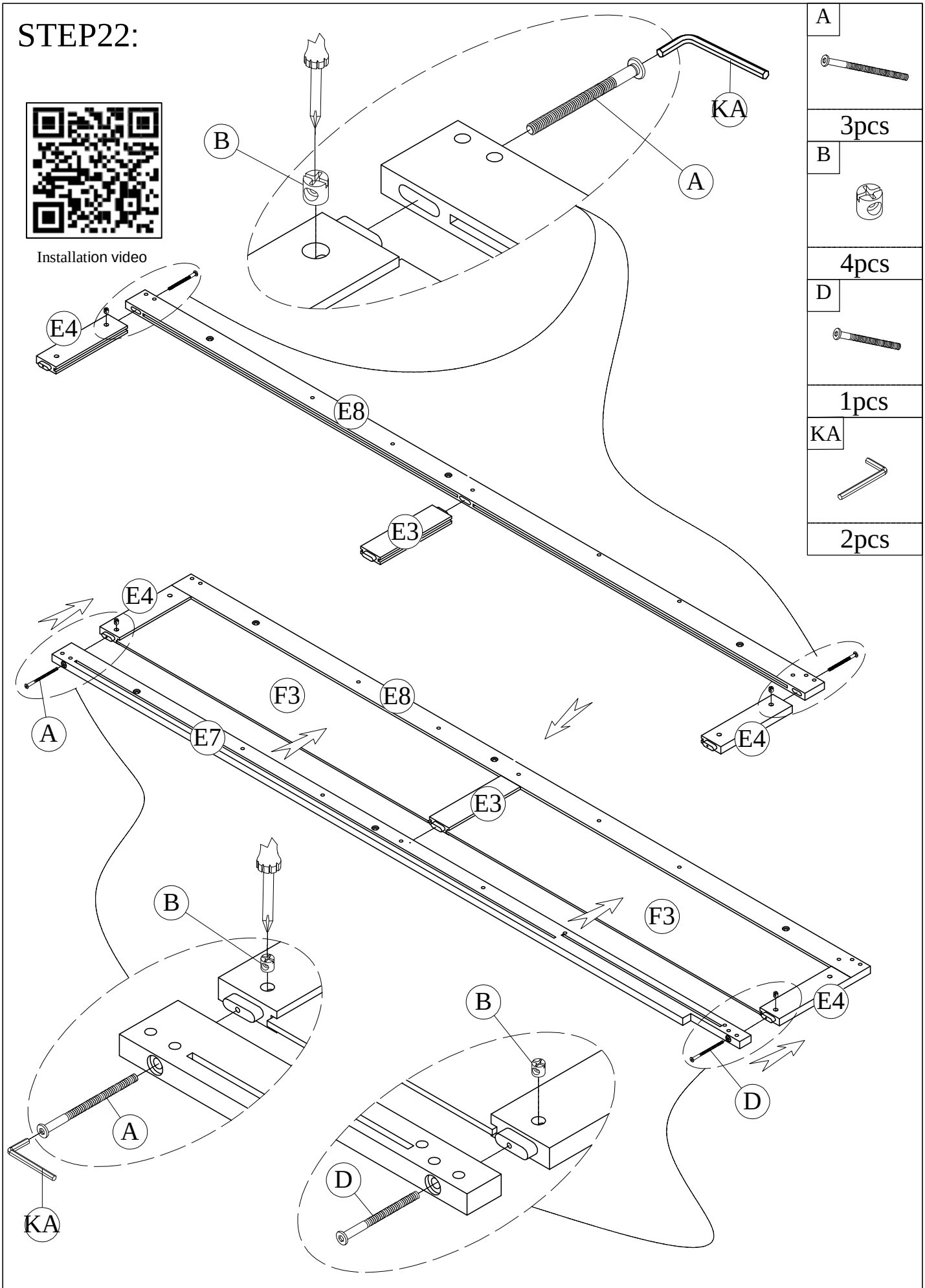

A	3pcs
B	4pcs
D	1pcs
KA	2pcs

STEP23:

B	D	A
4pcs	1pcs	3pcs

KA
2pcs

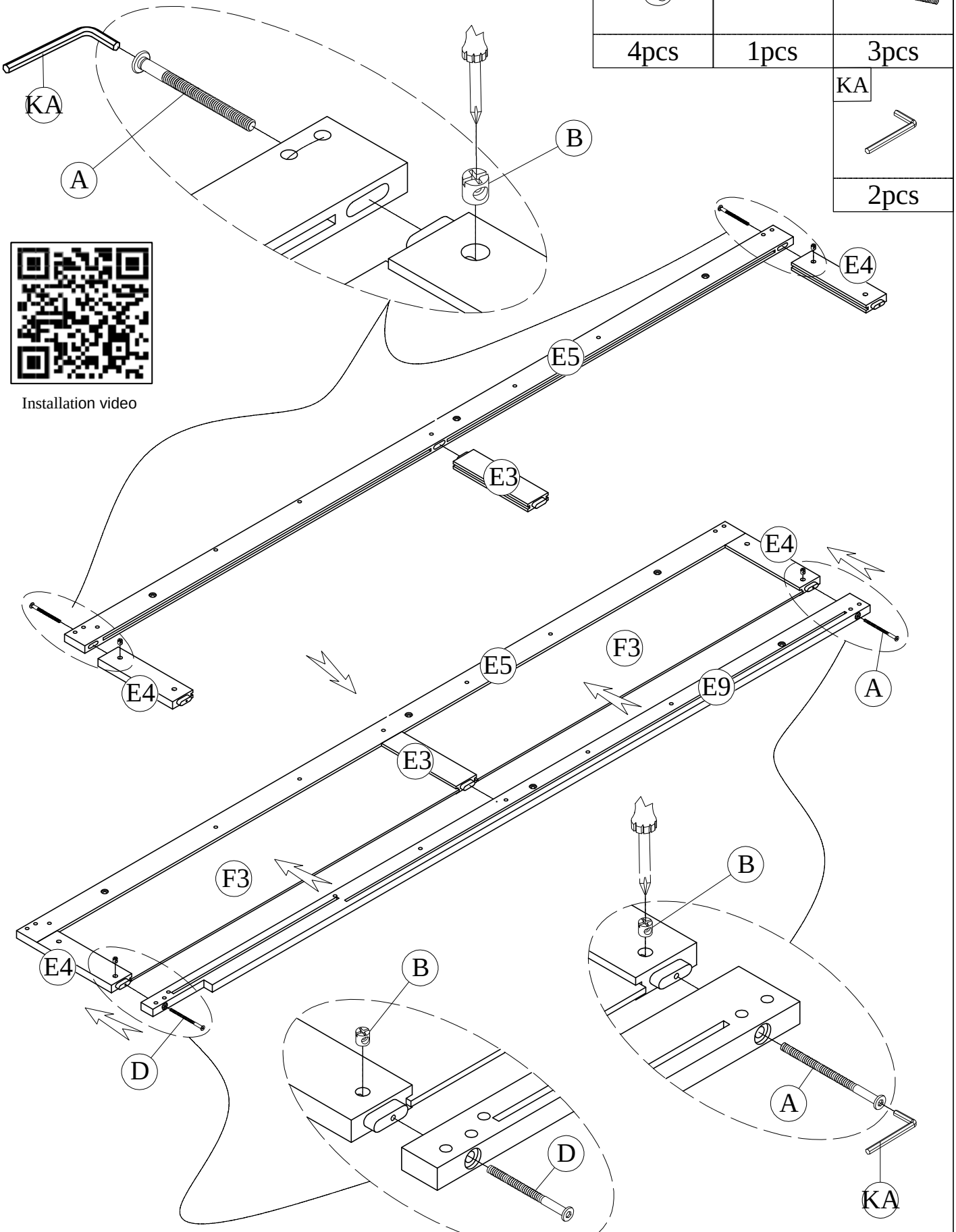

STEP24:

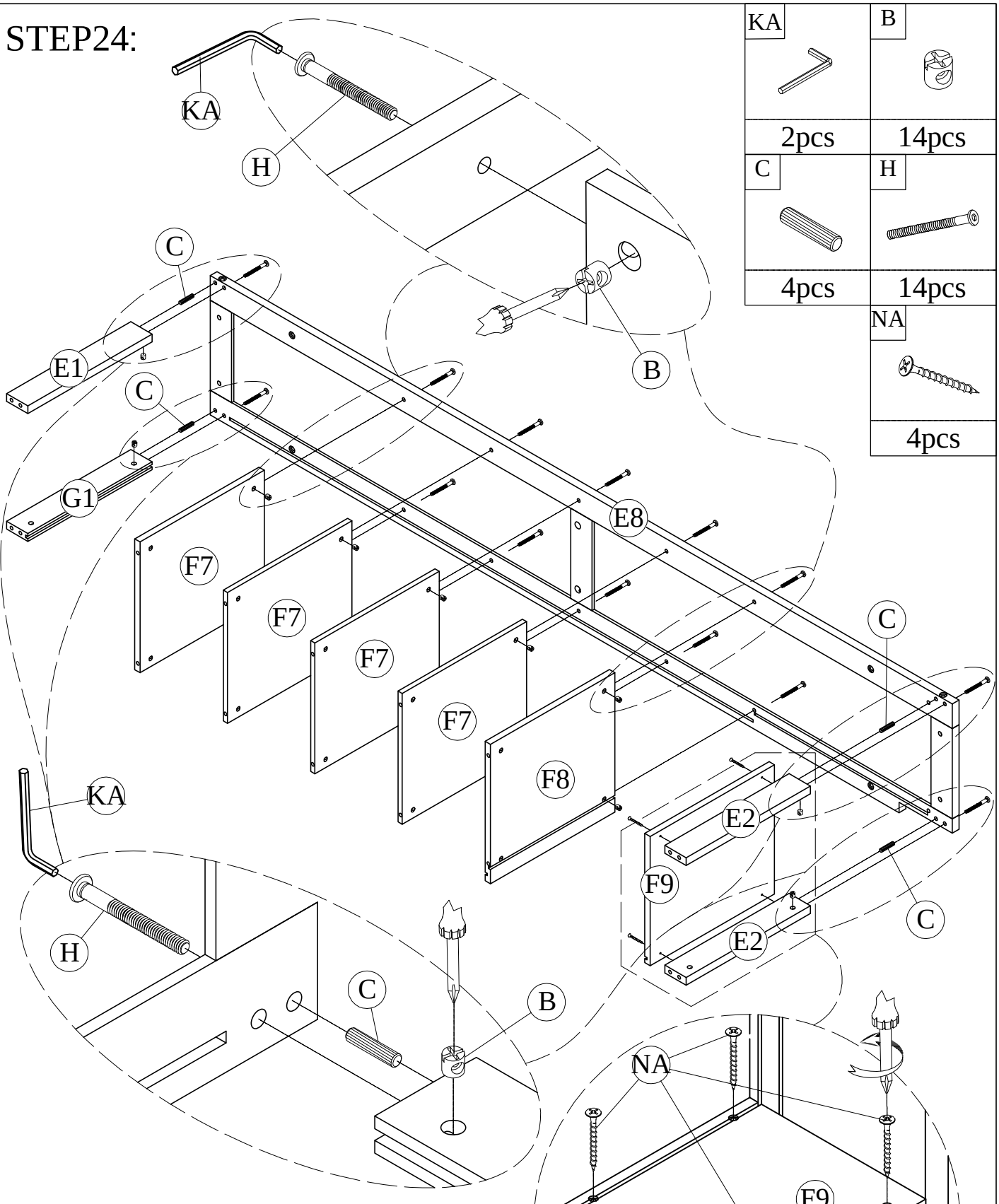

KA	B
2pcs	14pcs
C	H
4pcs	14pcs
NA	
4pcs	

Installation video

STEP25:

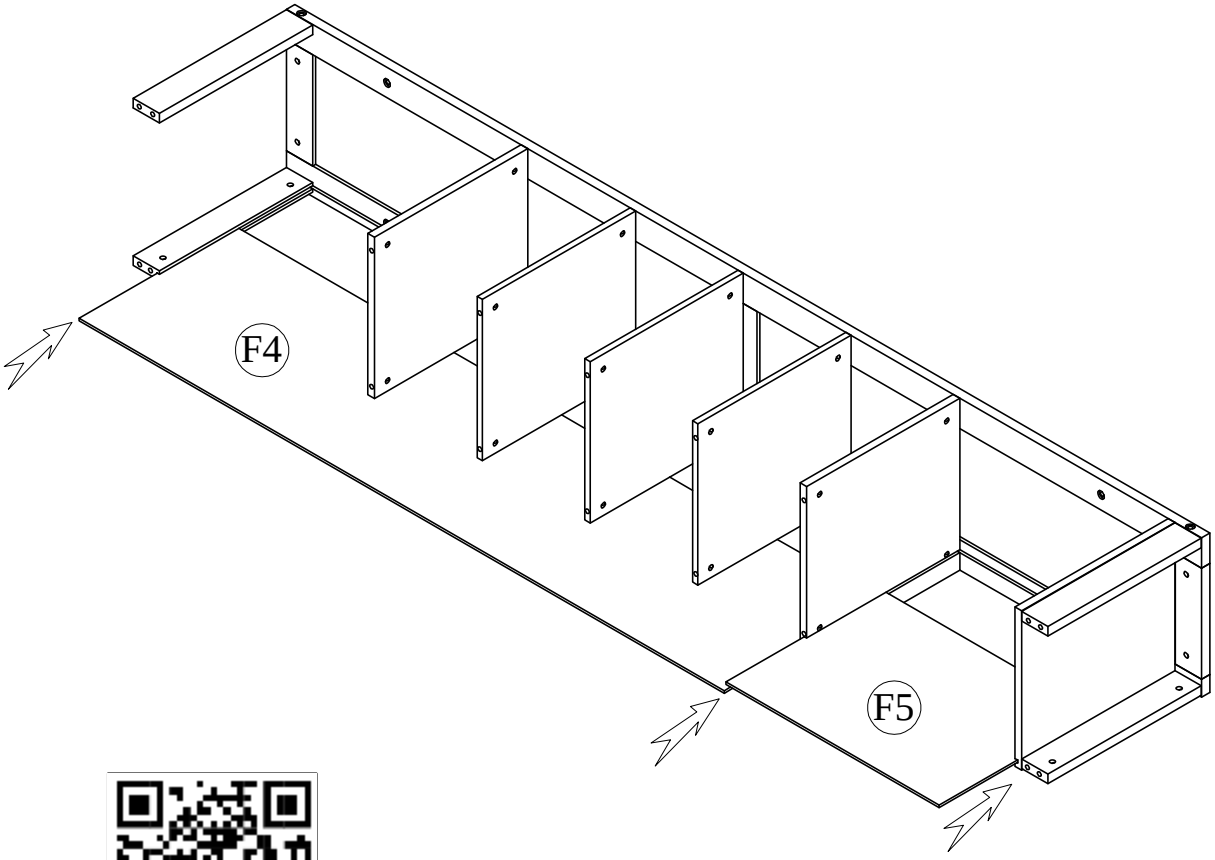

Installation video

STEP26:

Installation video

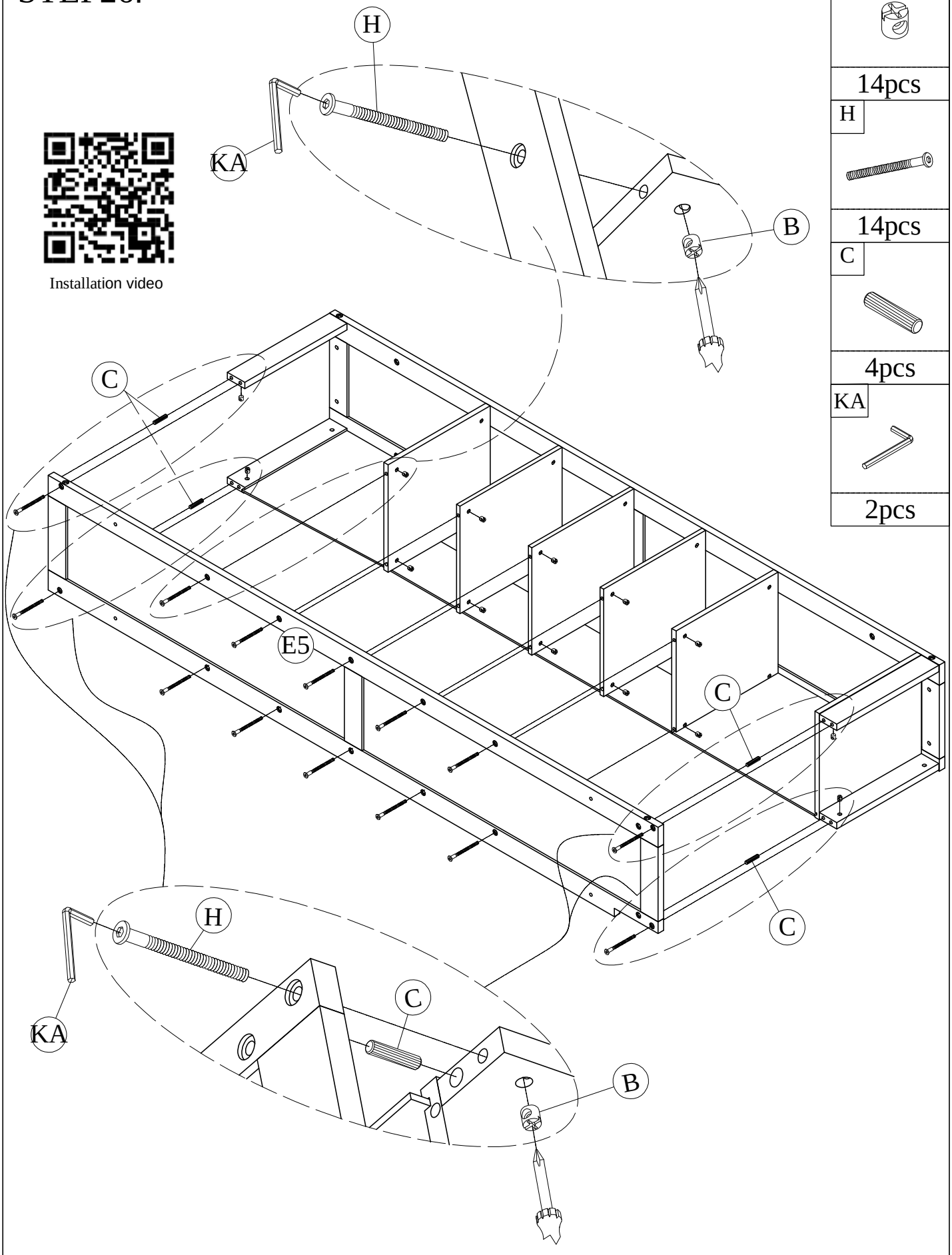

B
14pcs
H
14pcs
C
4pcs
KA
2pcs

STEP27:

KA	EA	C
1pc	4pcs	2pcs

Installation video

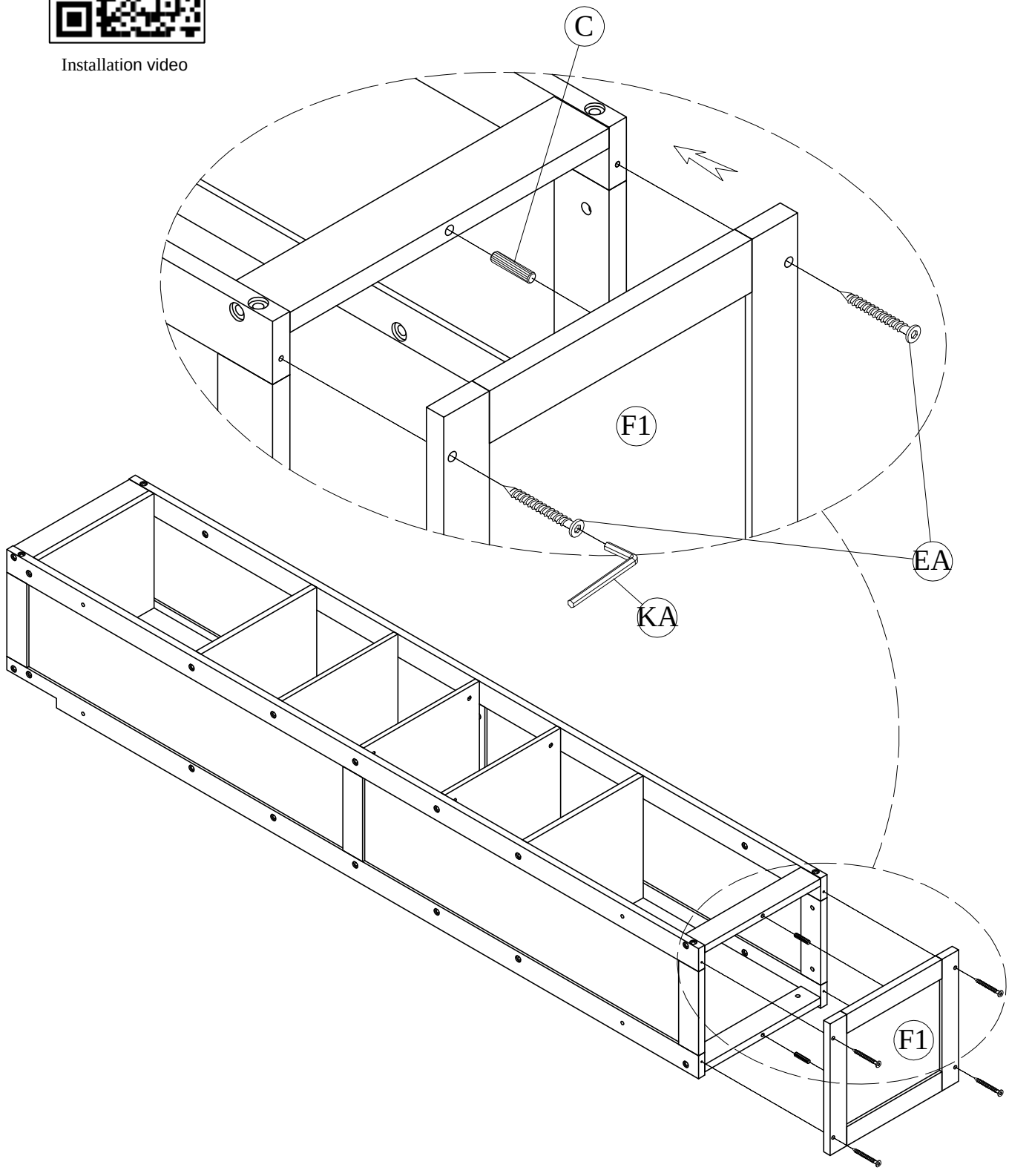

STEP28:

Installation video

R
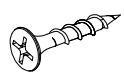
20pcs
Q
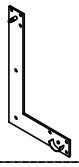
2pcs

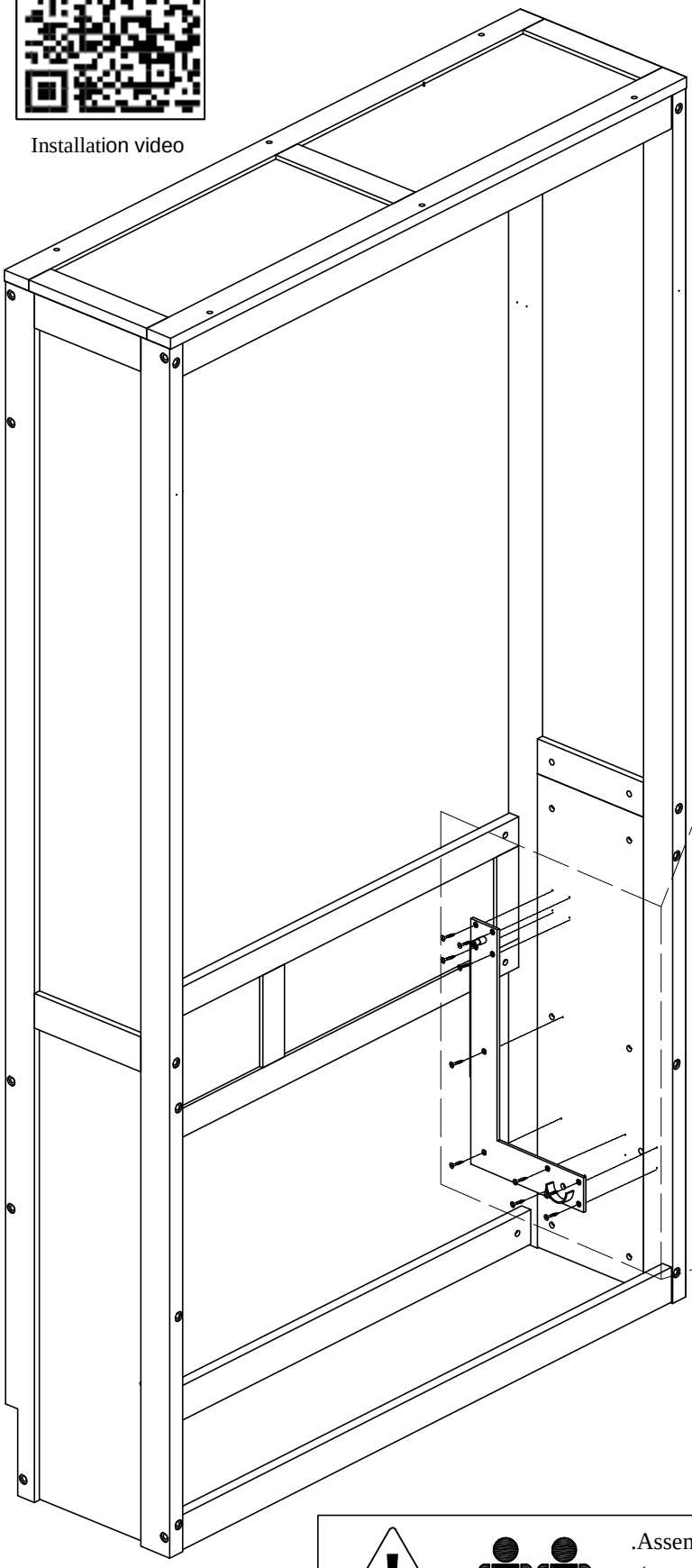

x2

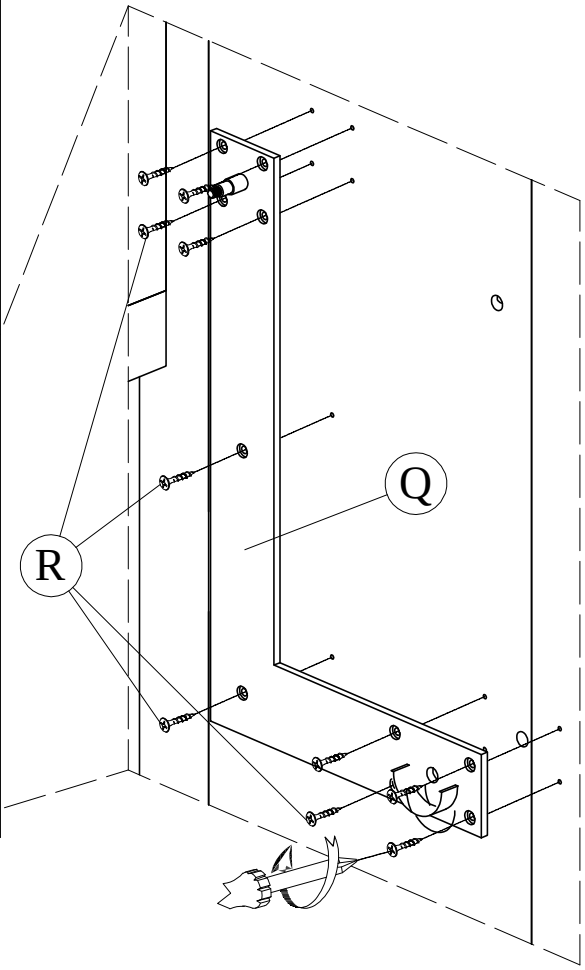

.Assembly requires two people
(one to hold the large cabinet steady,
and one to assemble the accessories
and place them in the correct positions).

STEP29:

Installation video

R

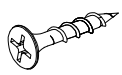

20pcs

P

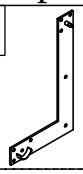

2pcs

x2

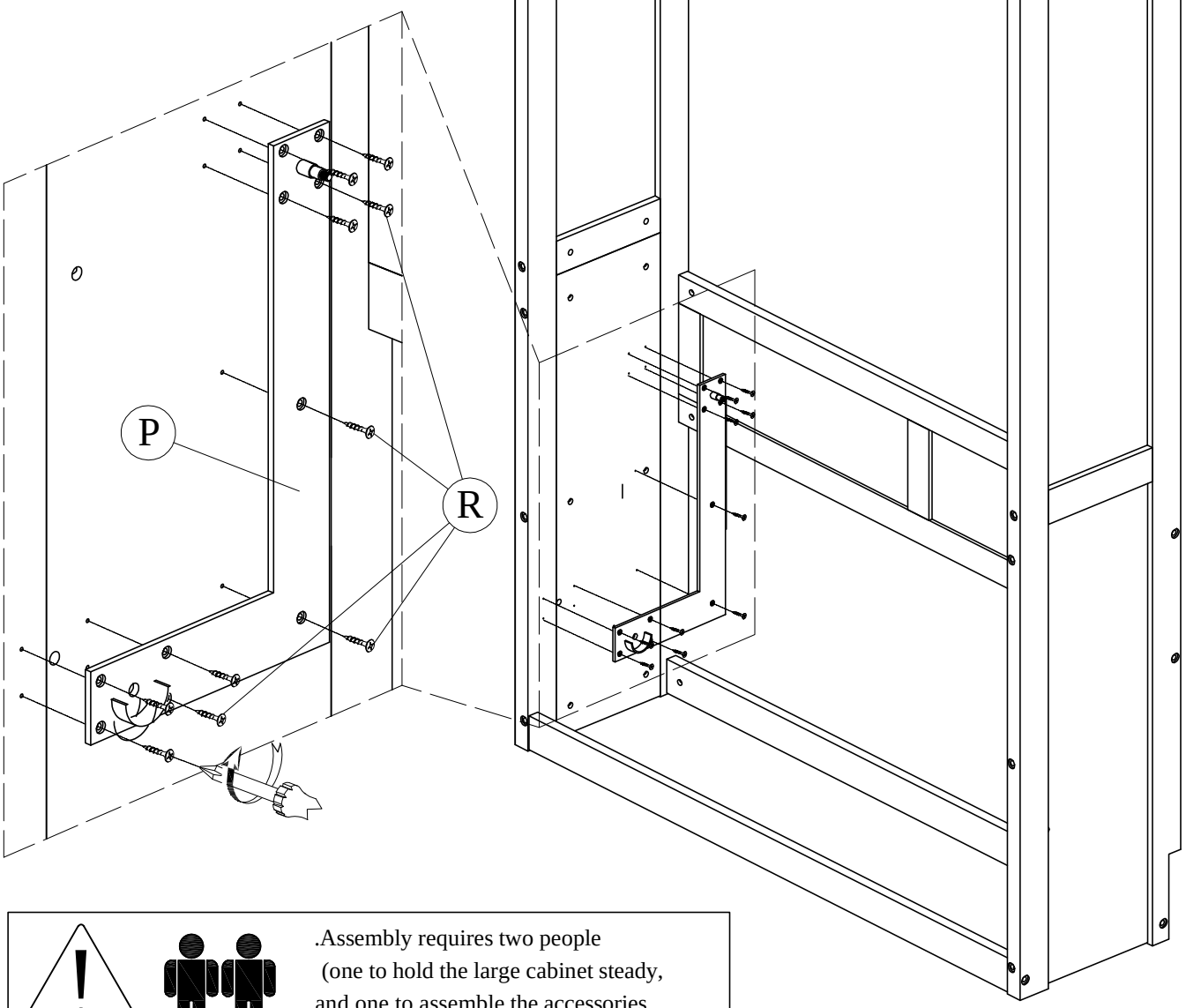

.Assembly requires two people
(one to hold the large cabinet steady,
and one to assemble the accessories
and place them in the correct positions).

1- Determine the position of the bed in the room.

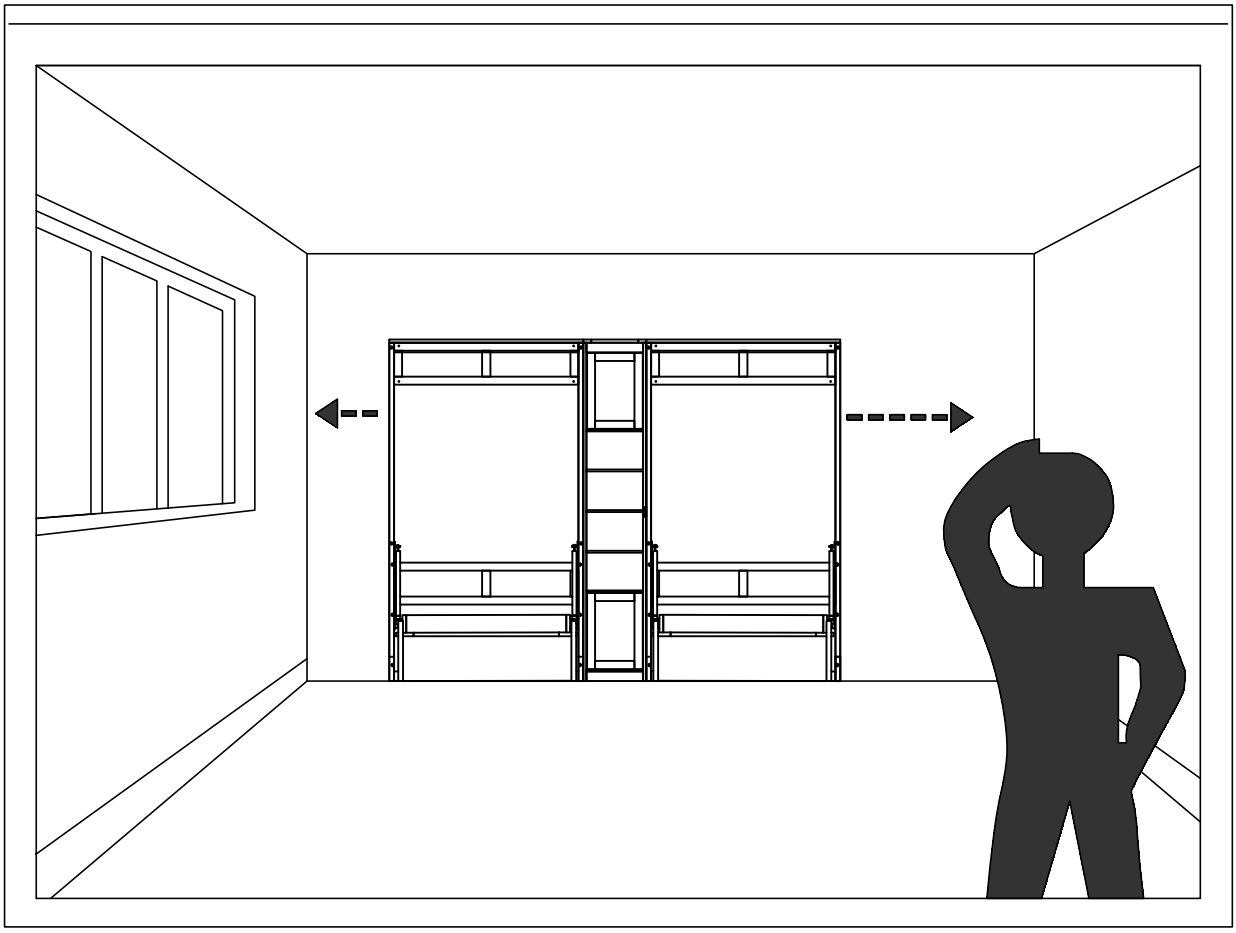

2- Put the bed back in its place. Please keep it vertical and horizontal.

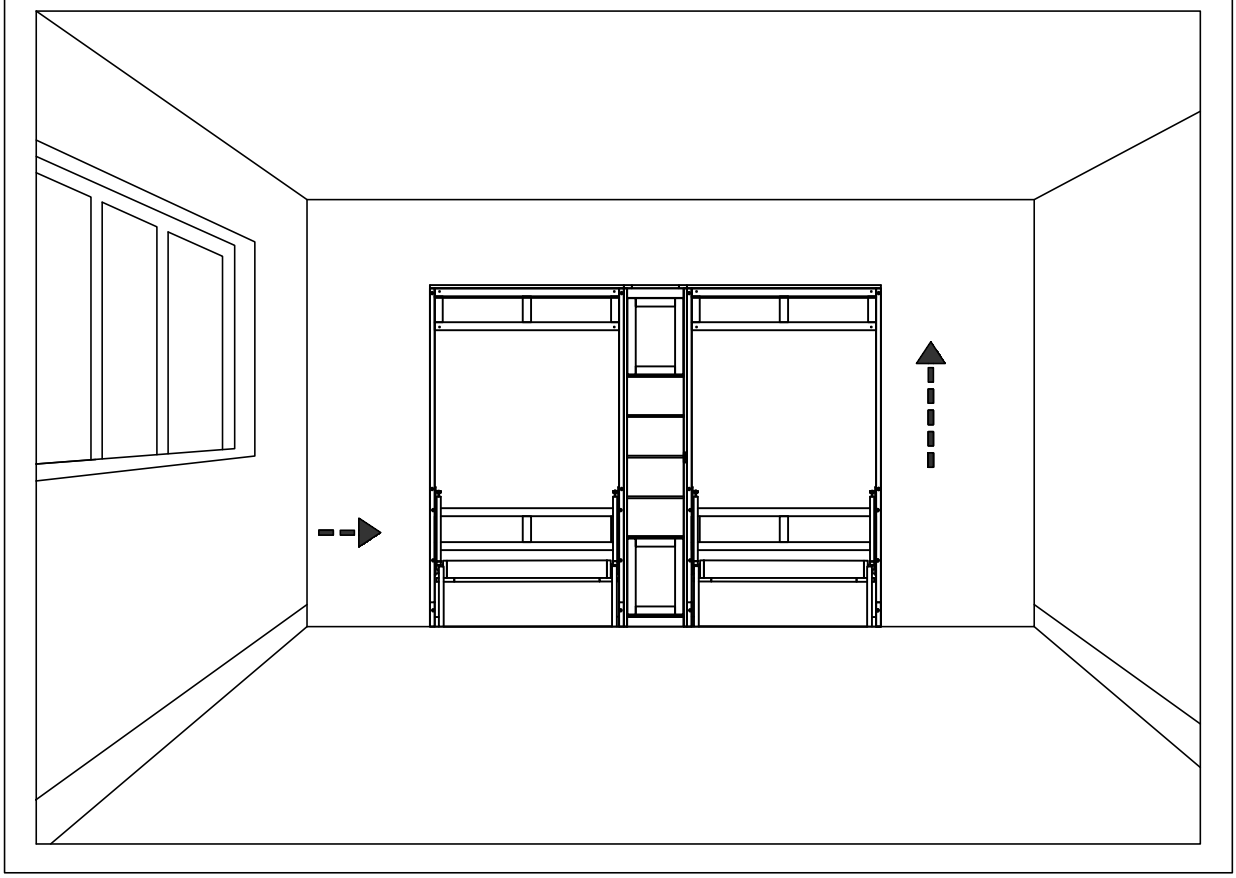

3- Mark the drilling points according to the actual product and the metal brackets already assembled onto the bed.

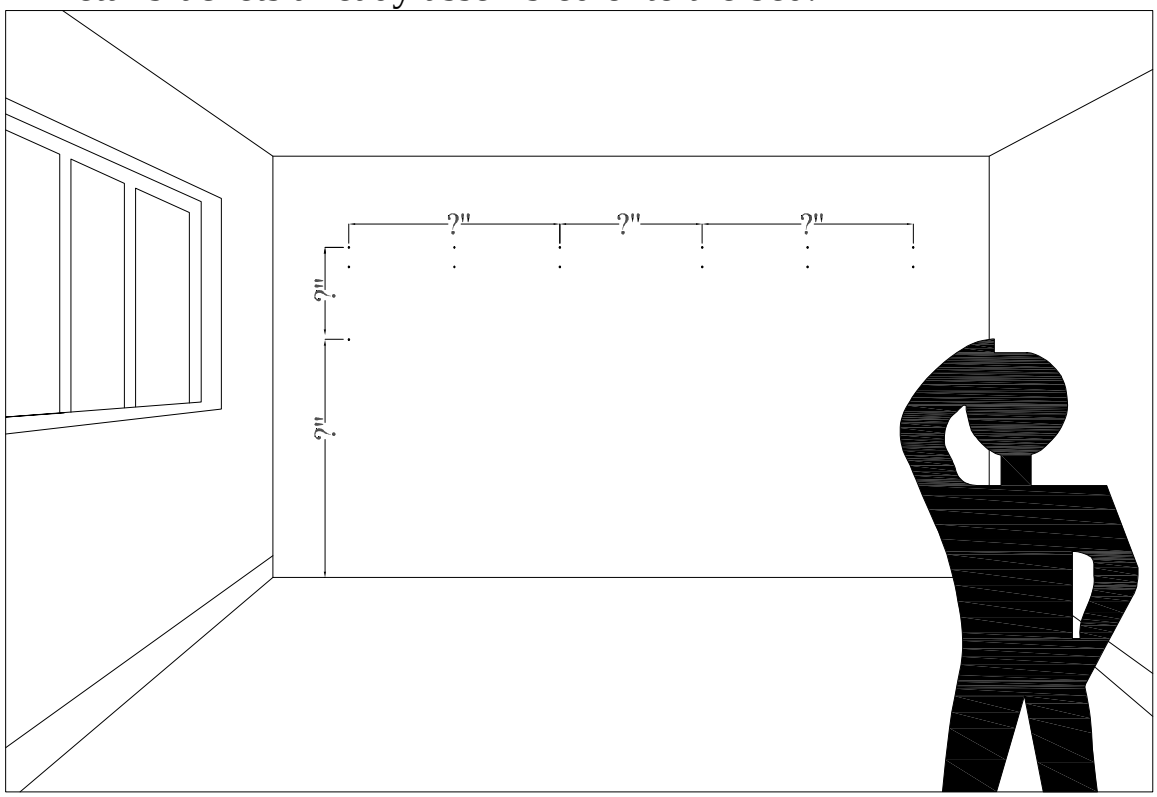

4- Drill holes at the marked points,
the holes must be sized to fit the metal anchors.

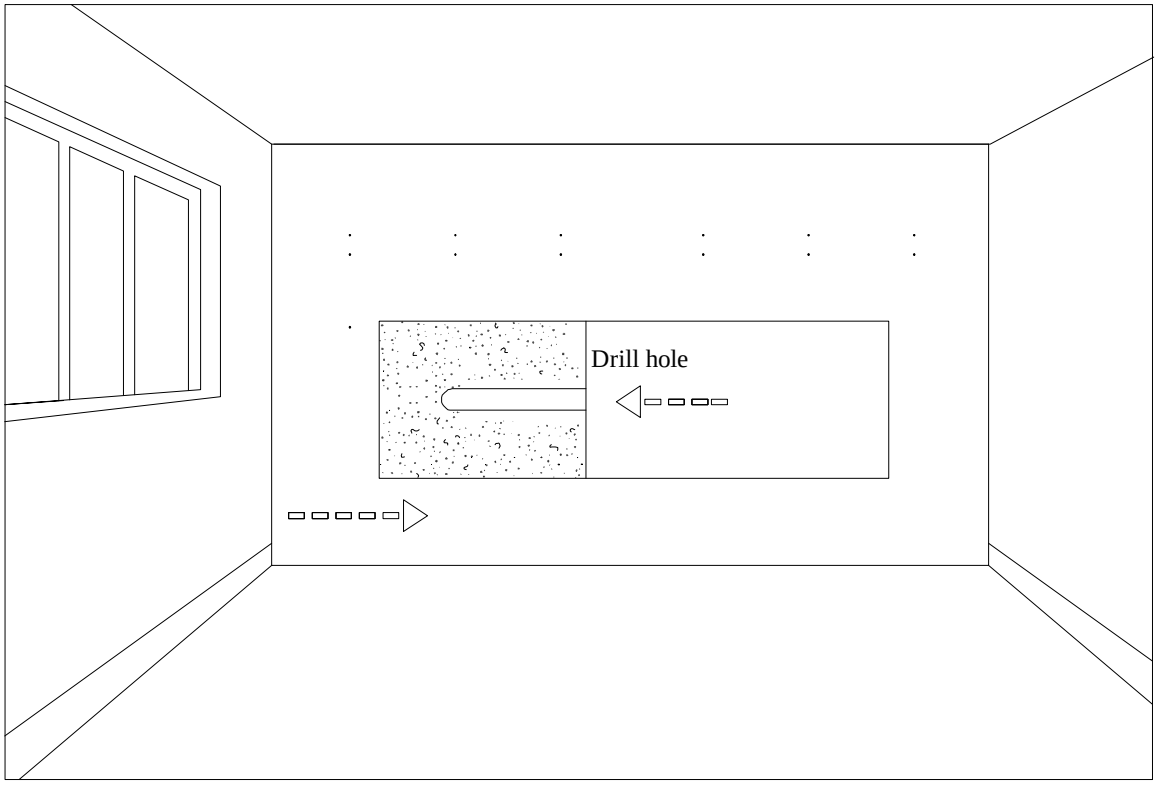

STEP30:

R	S	DA
20pcs	4pcs	6pcs

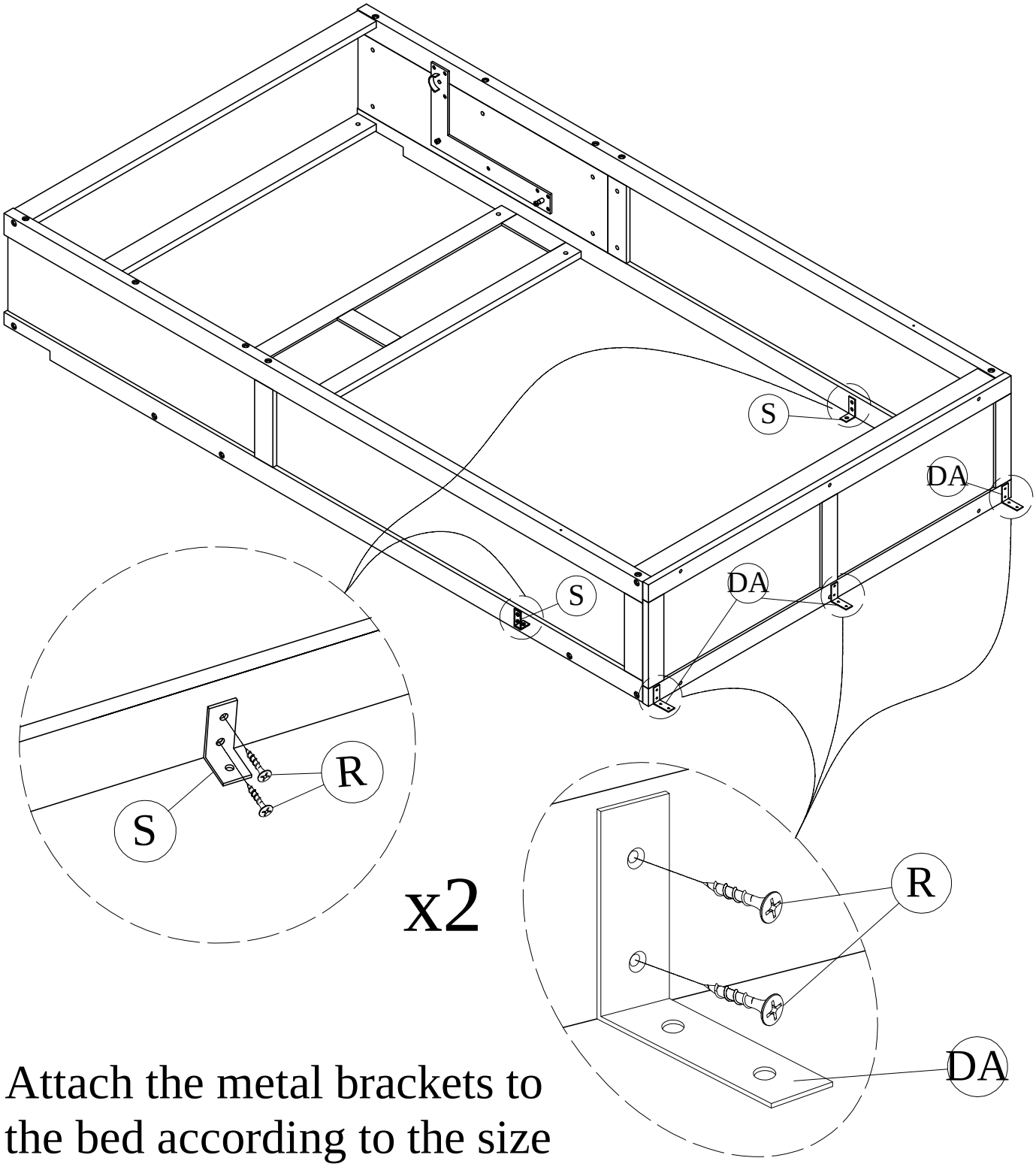

Attach the metal brackets to the bed according to the size of the drilled holes in the wall.

STEP31:

This accessory is for use on brick or concrete walls.

AA	BA
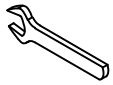	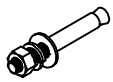
1pc	8pcs

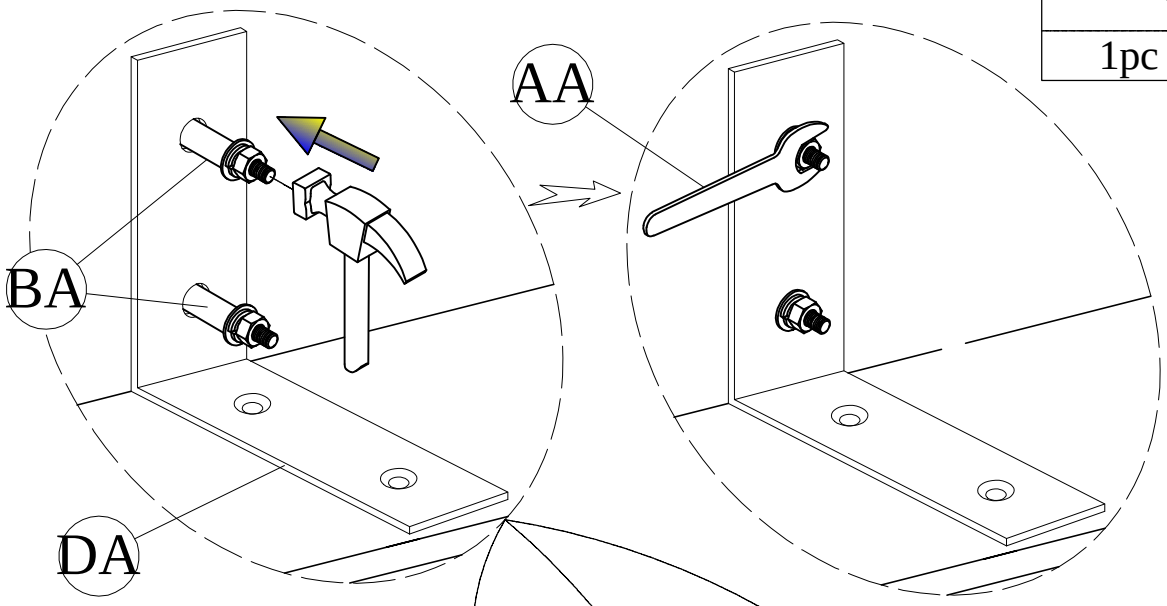

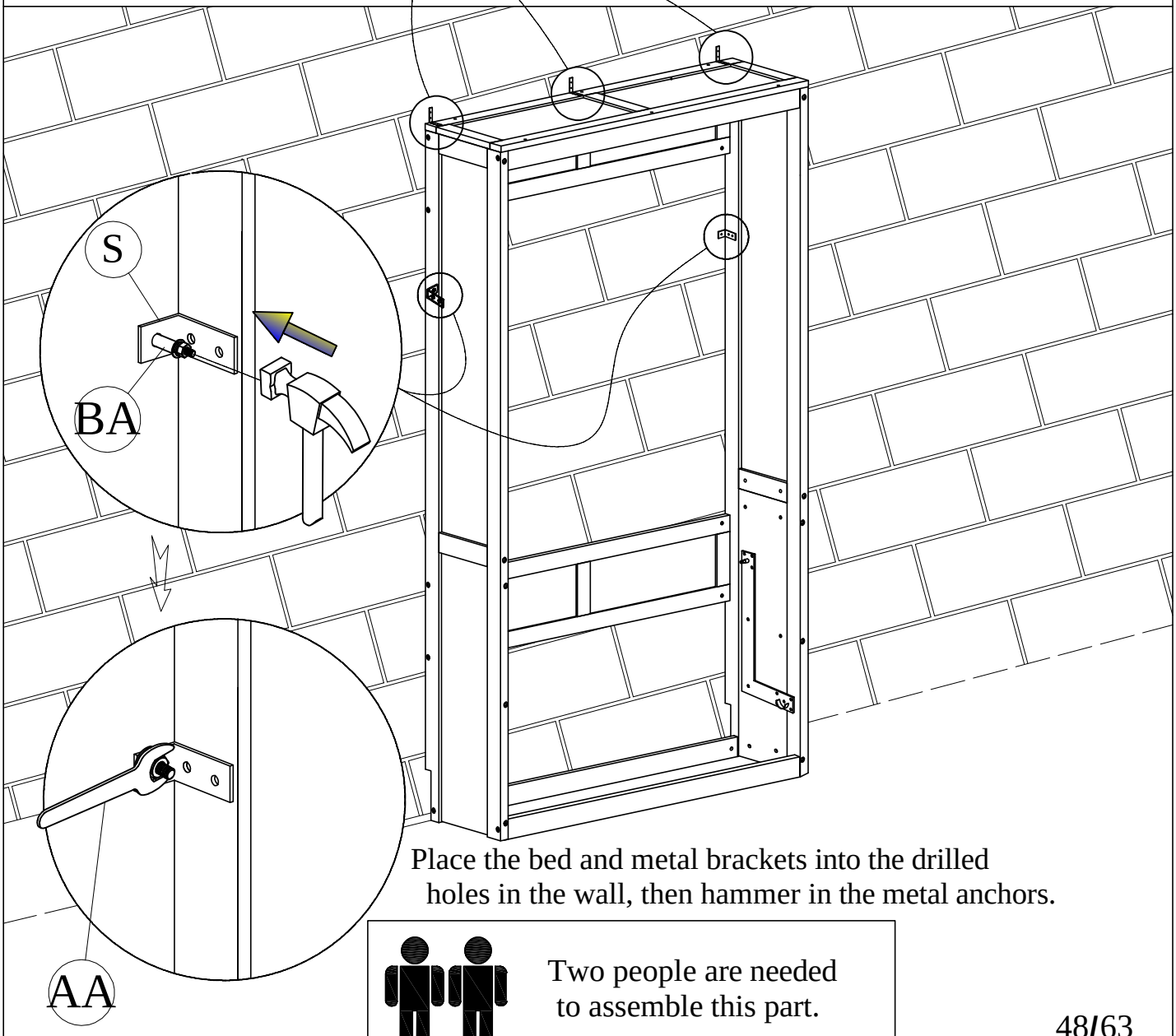

Place the bed and metal brackets into the drilled holes in the wall, then hammer in the metal anchors.

Two people are needed to assemble this part.

STEP32:

This accessory is for wooden walls.

BB	CA
8pcs	8pcs

KA
2pcs

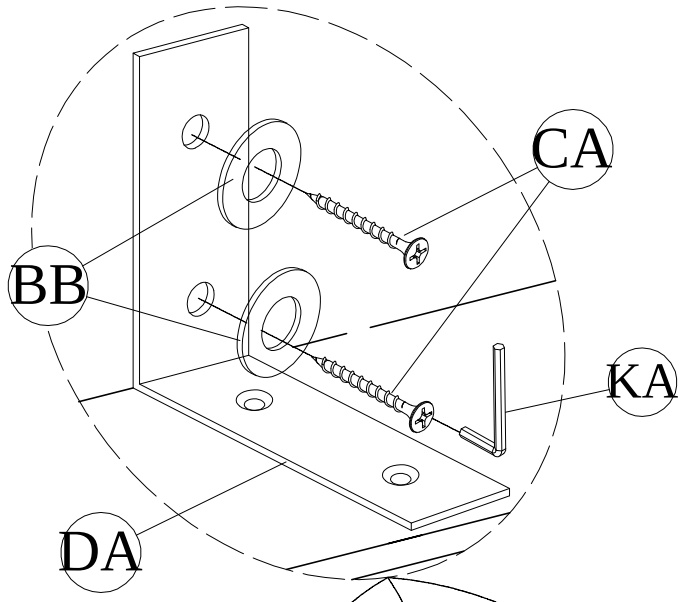

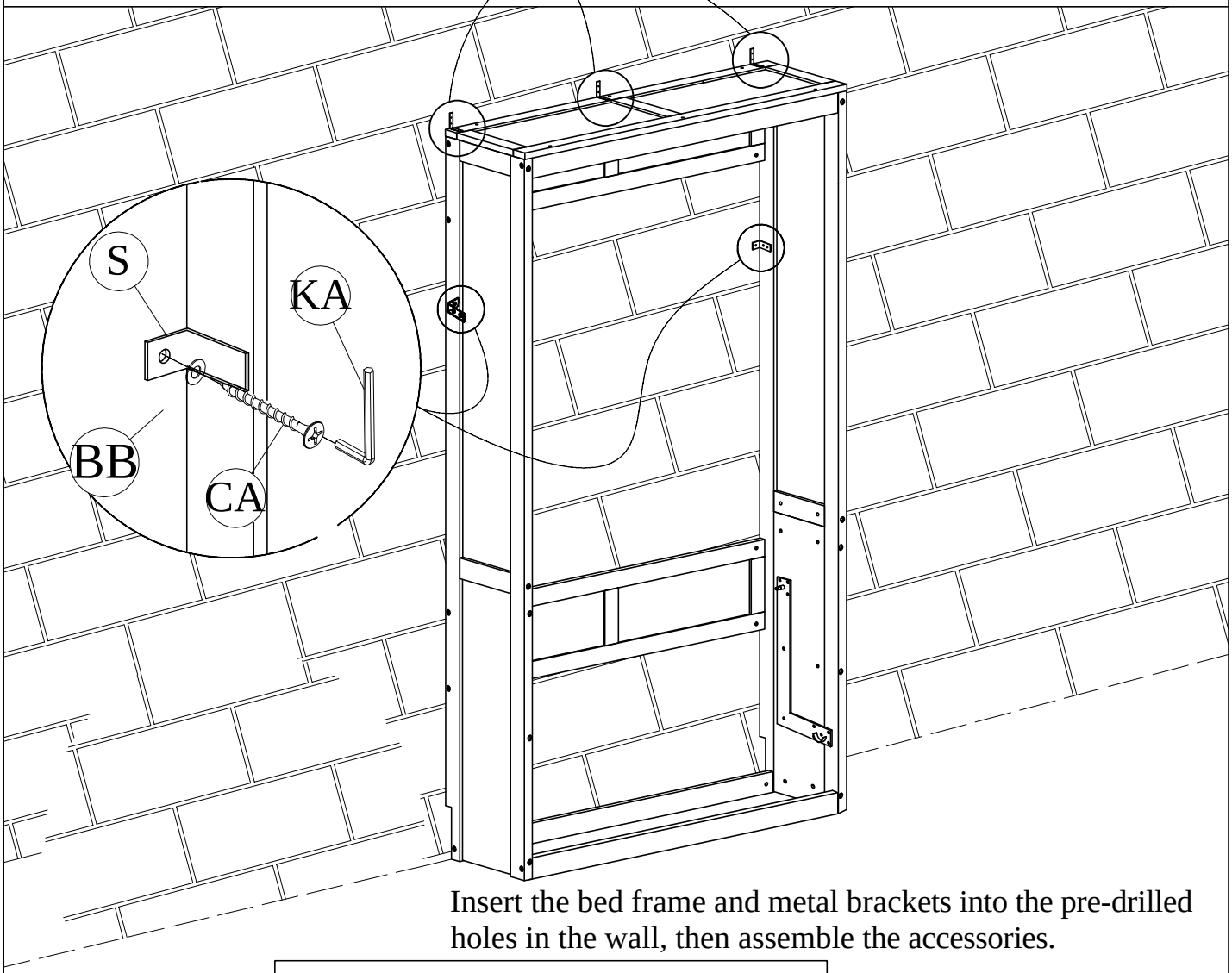

Insert the bed frame and metal brackets into the pre-drilled holes in the wall, then assemble the accessories.

Two people are needed to assemble this part.

STEP33:

KA	U
2pcs	2pcs

Installation video

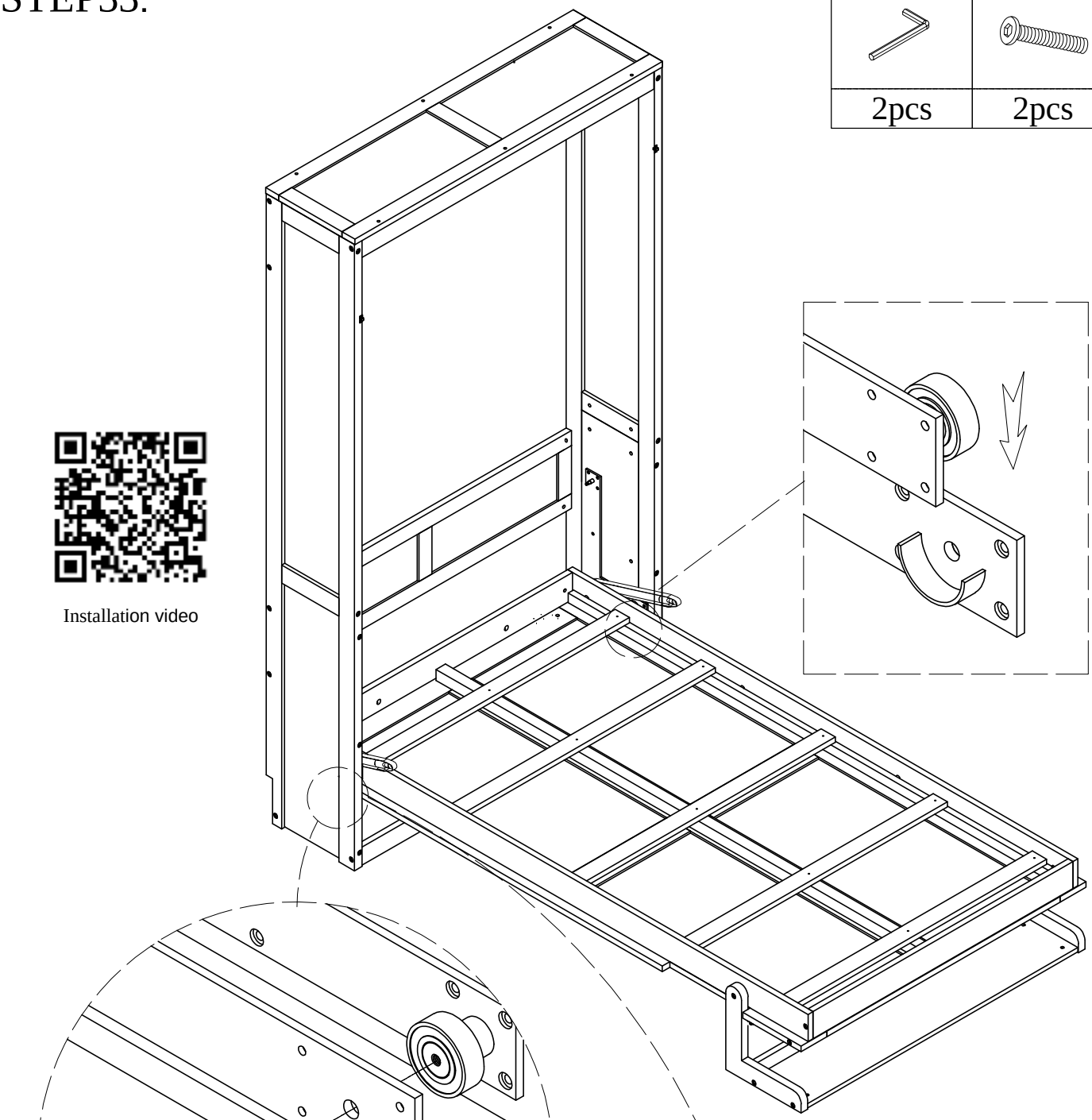

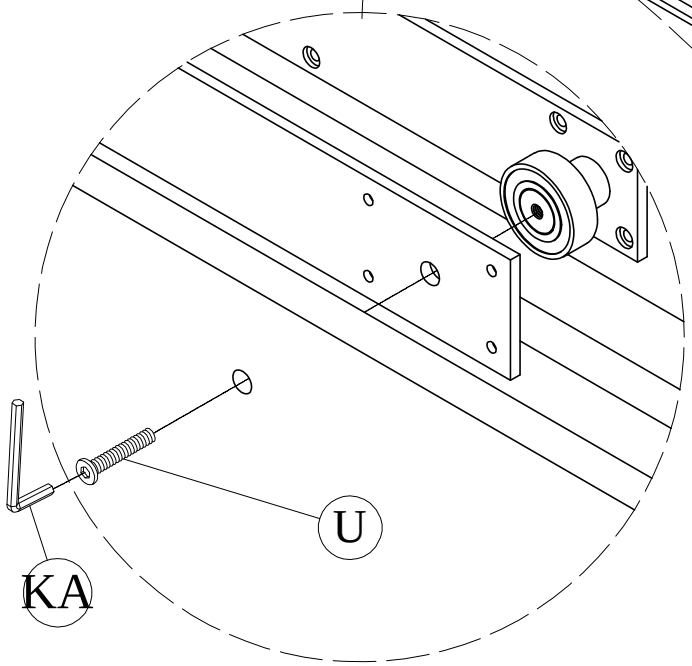

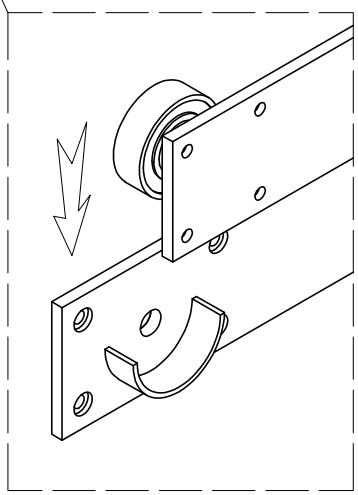

Two people are needed to assemble this part.

STEP34:

KA	EA
	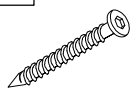
2pcs	5pcs

Installation video

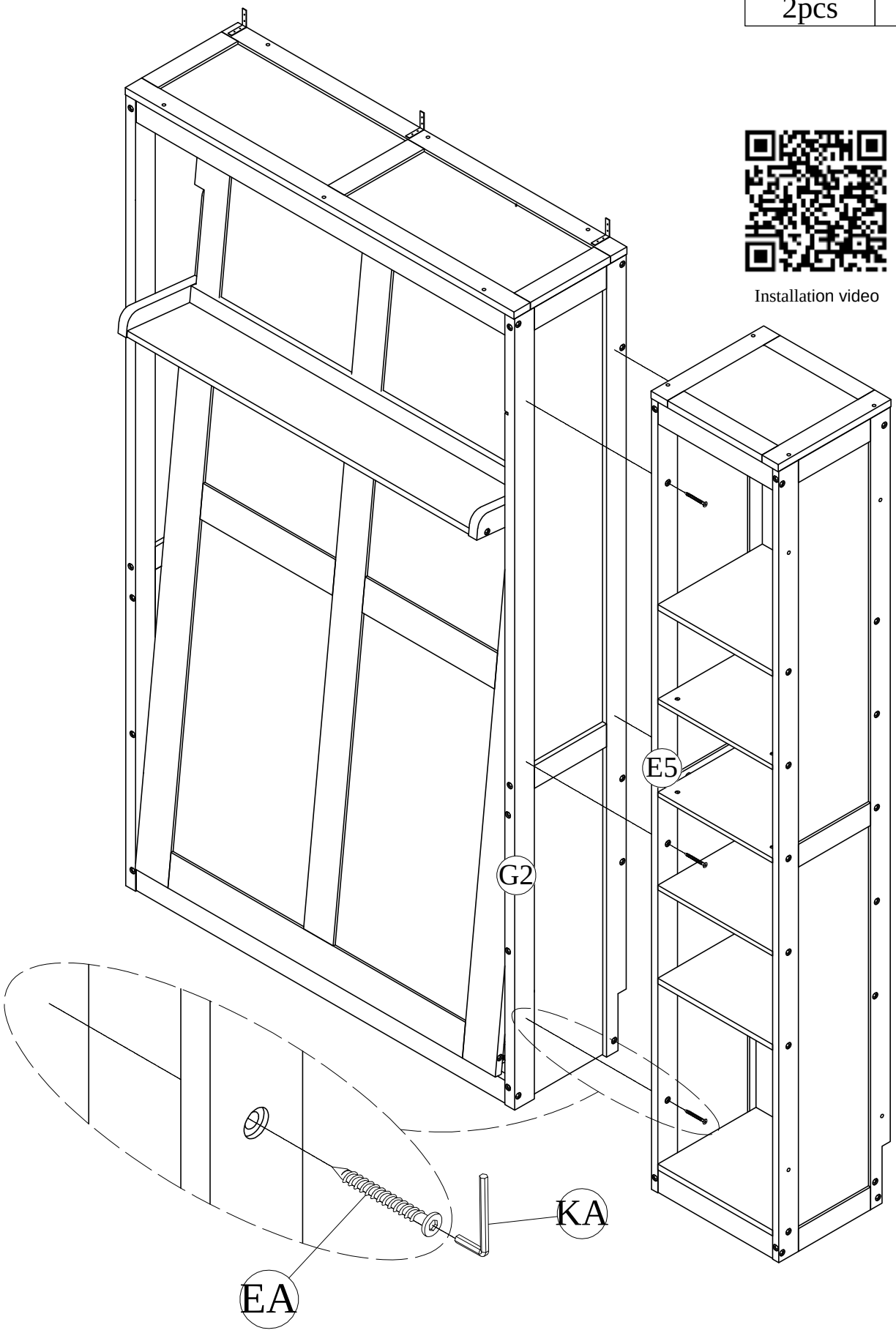

STEP35:

KA	U
2pcs	2pcs

Installation video

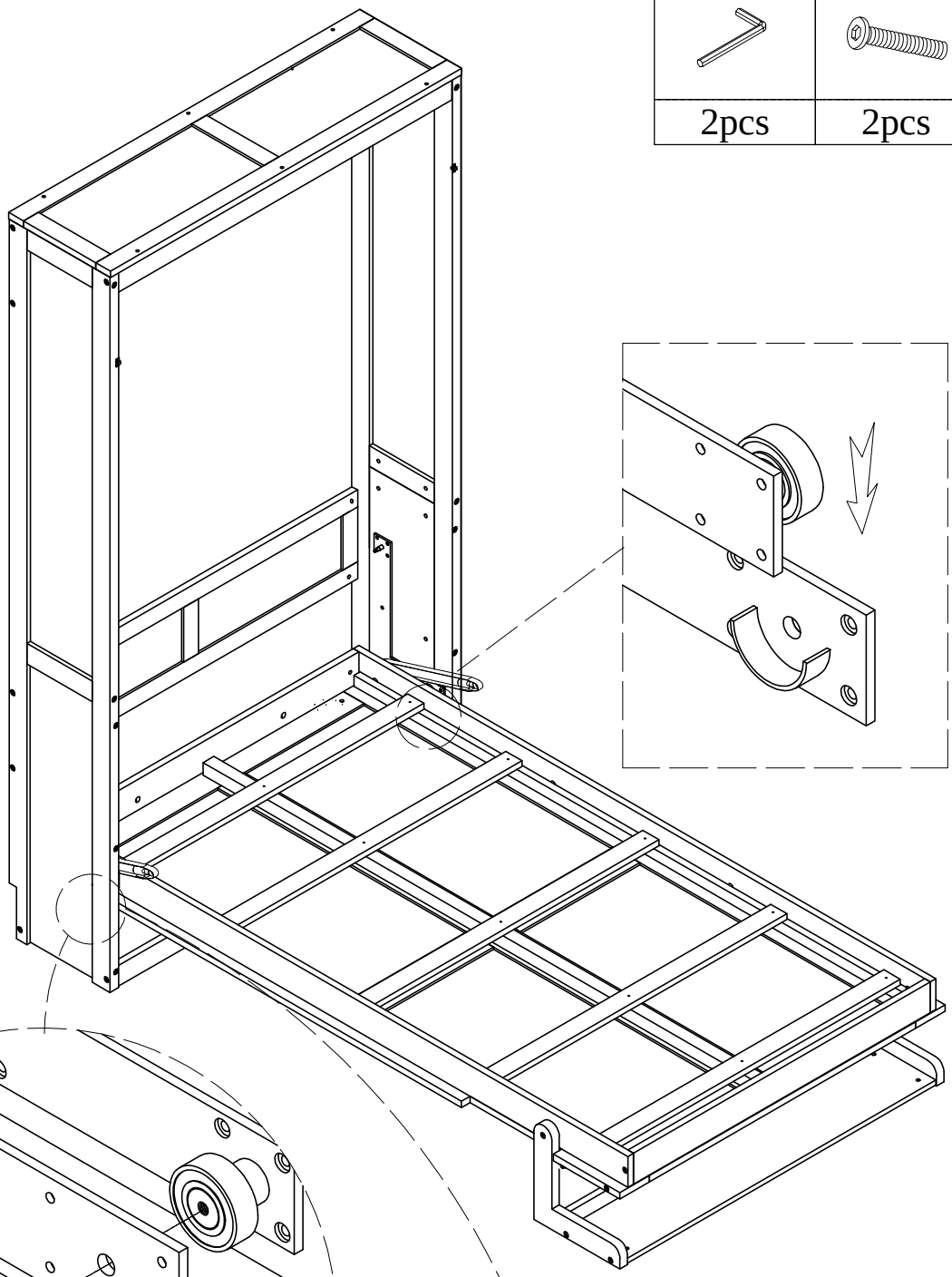

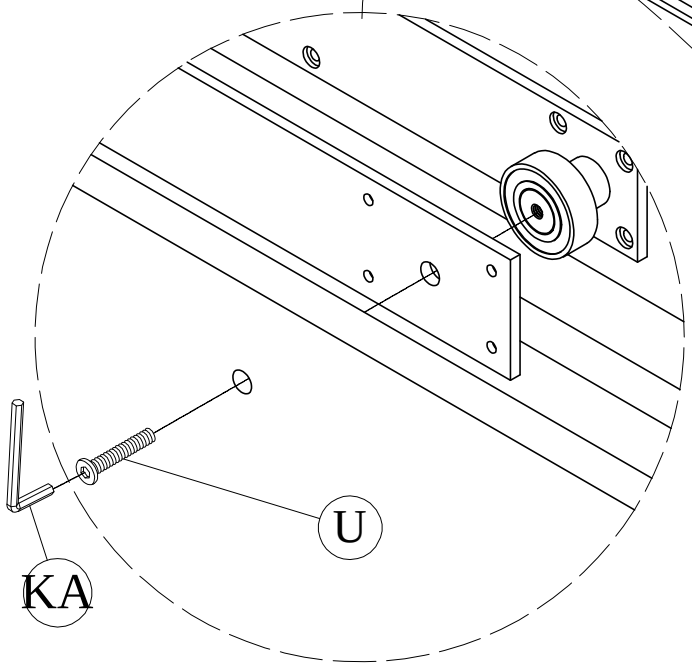

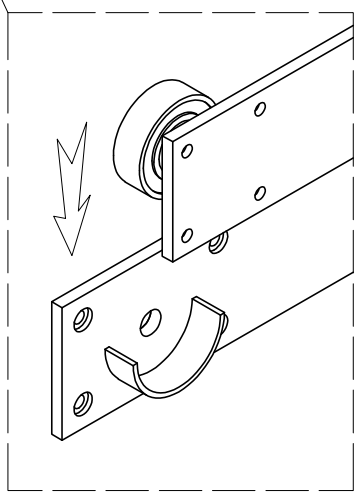

Two people are needed to assemble this part.

STEP36:

KA	EA
2pcs	5pcs

Installation video

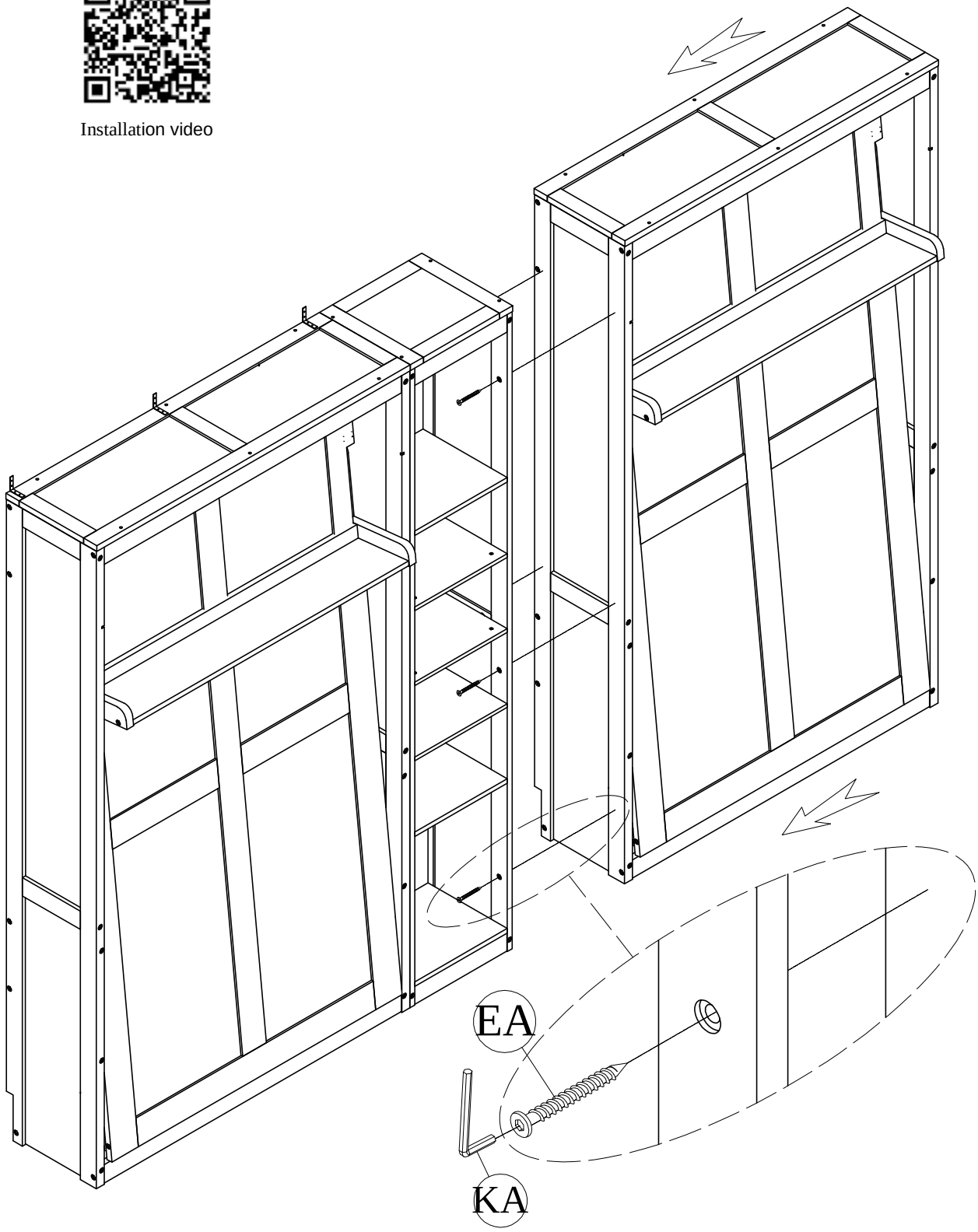

Two people are needed to assemble this part.

STEP37: This accessory is for use on brick or concrete walls.

AA	BA
1pc	8pcs

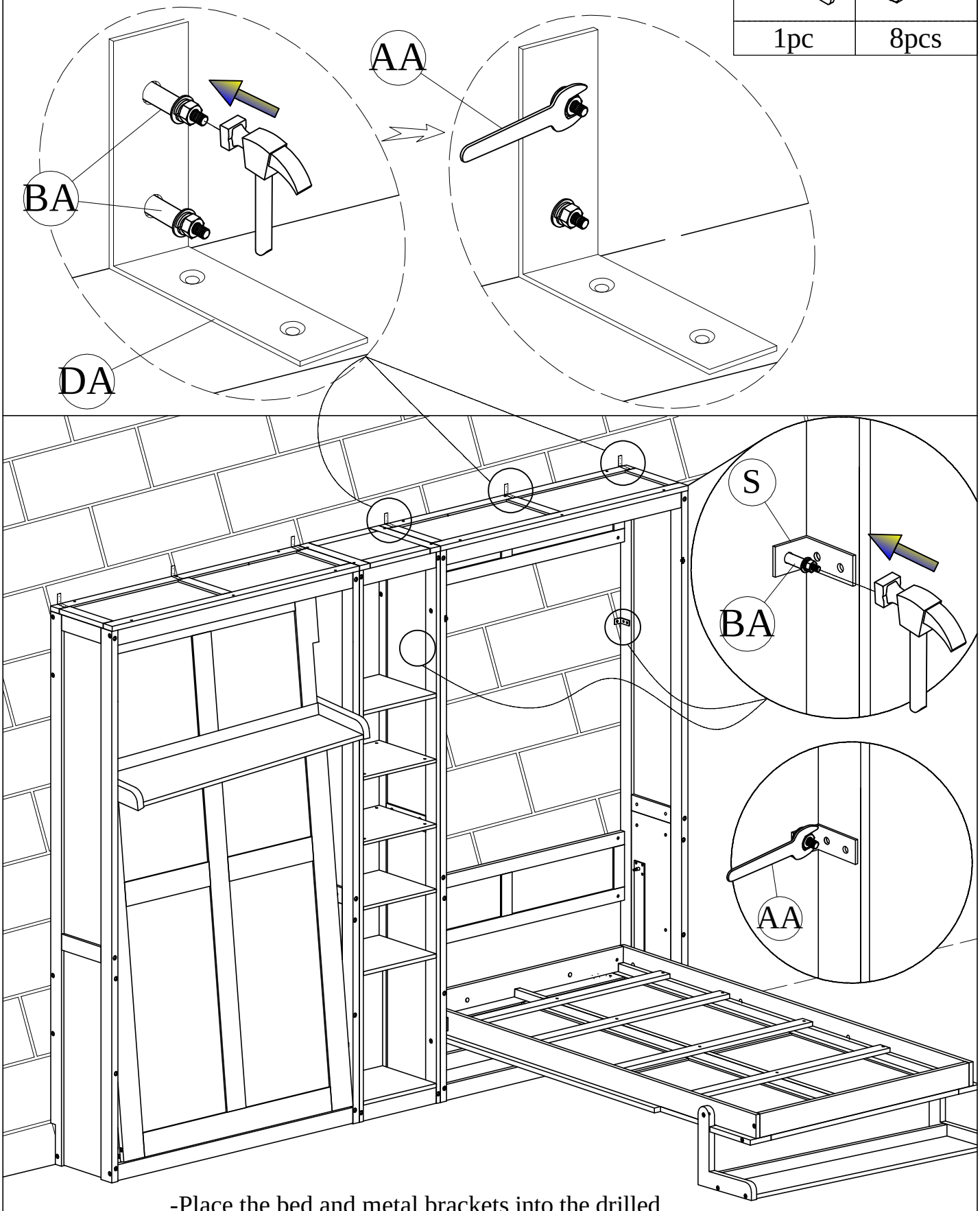

-Place the bed and metal brackets into the drilled holes in the wall, then hammer in the metal anchors.

- It takes 3 people to assemble (2 people to hold the bed steady and 1 person to attach the accessories to the correct holes drilled in the wall).

STEP38:

This accessory is for wooden walls.

BB	CA	KA
8pcs	8pcs	2pcs

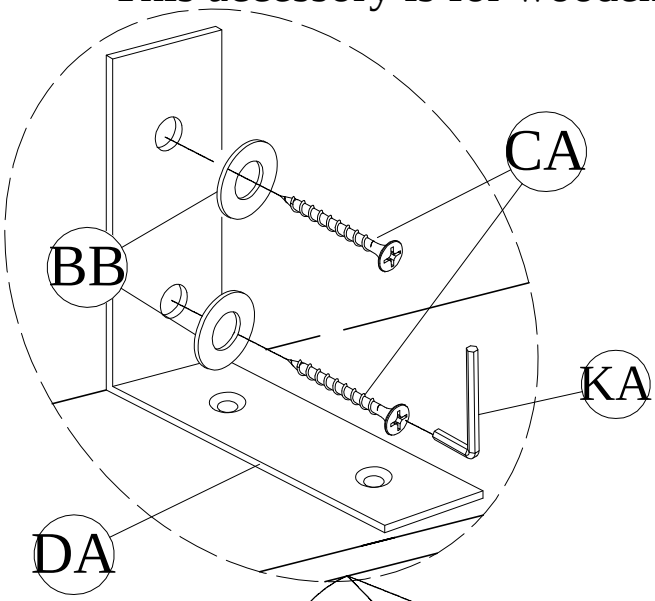

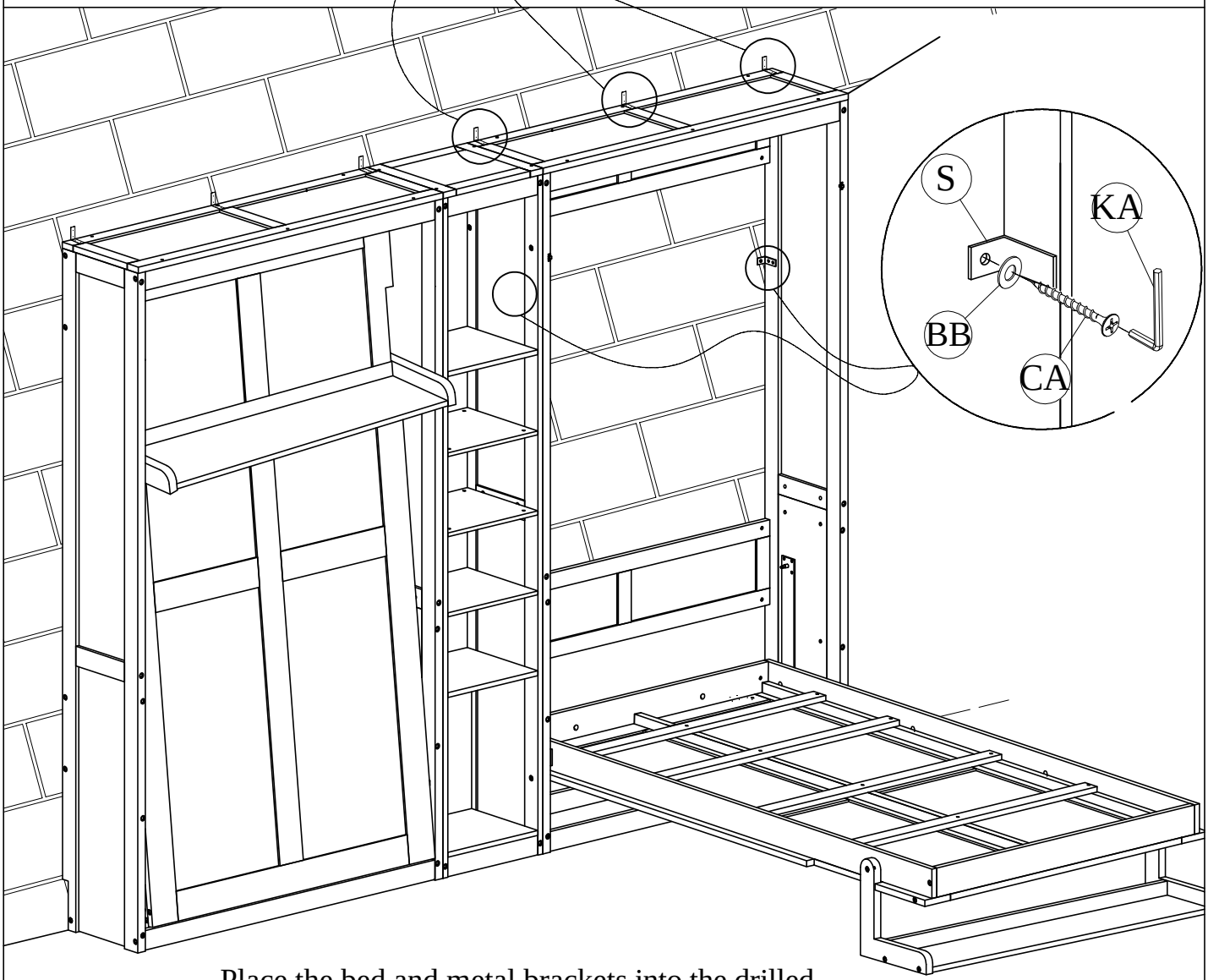

-Place the bed and metal brackets into the drilled holes in the wall, then hammer in the metal anchors.

- It takes 3 people to assemble (2 people to hold the bed steady and 1 person to attach the accessories to the correct holes drilled in the wall).

STEP39:

Installation video

Y
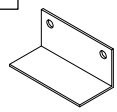
4pcs
T
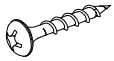
8pcs

STEP40:

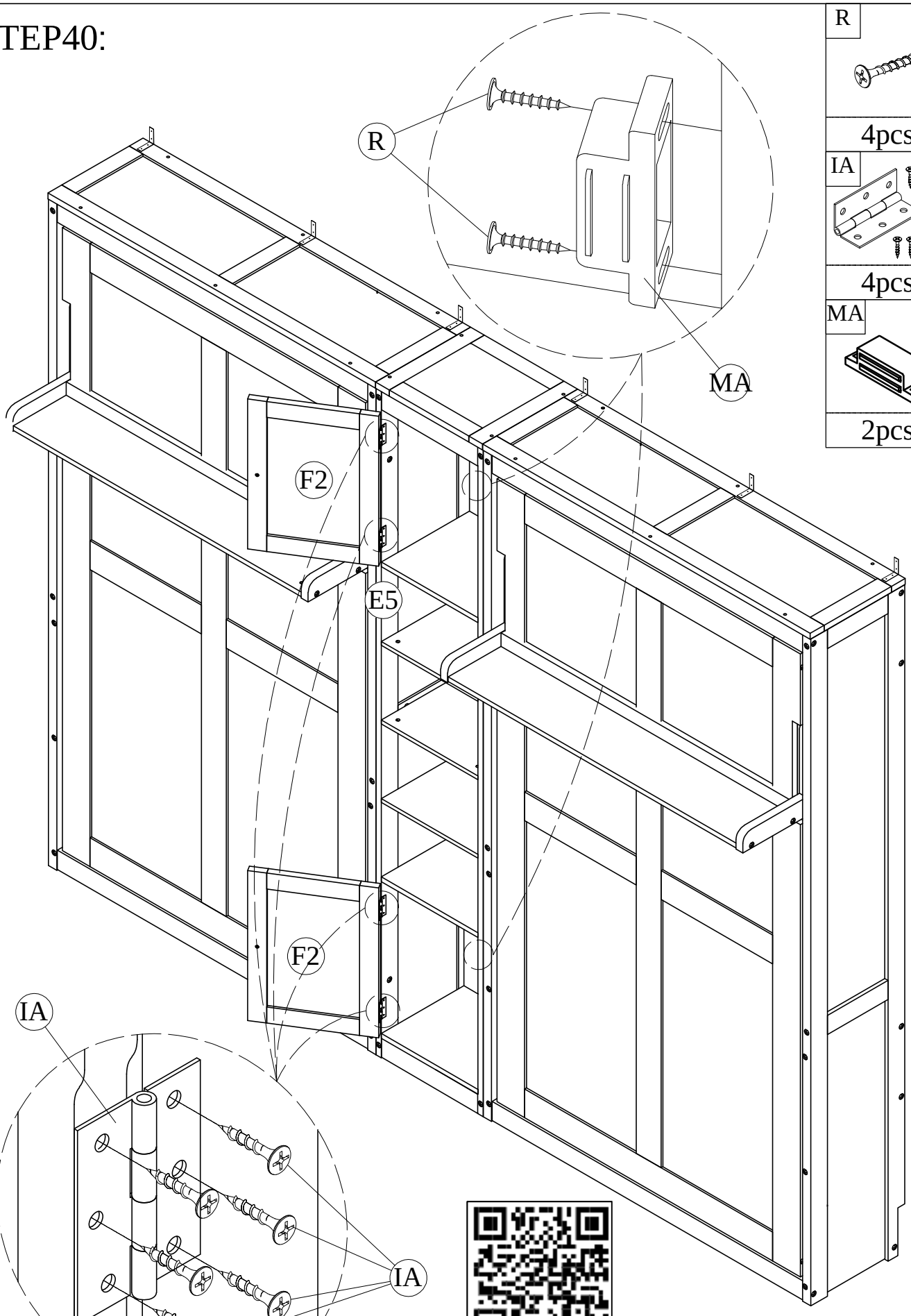

R
4pcs
IA
4pcs
MA
2pcs

Installation video

STEP41:

HA



2pcs

Installation video

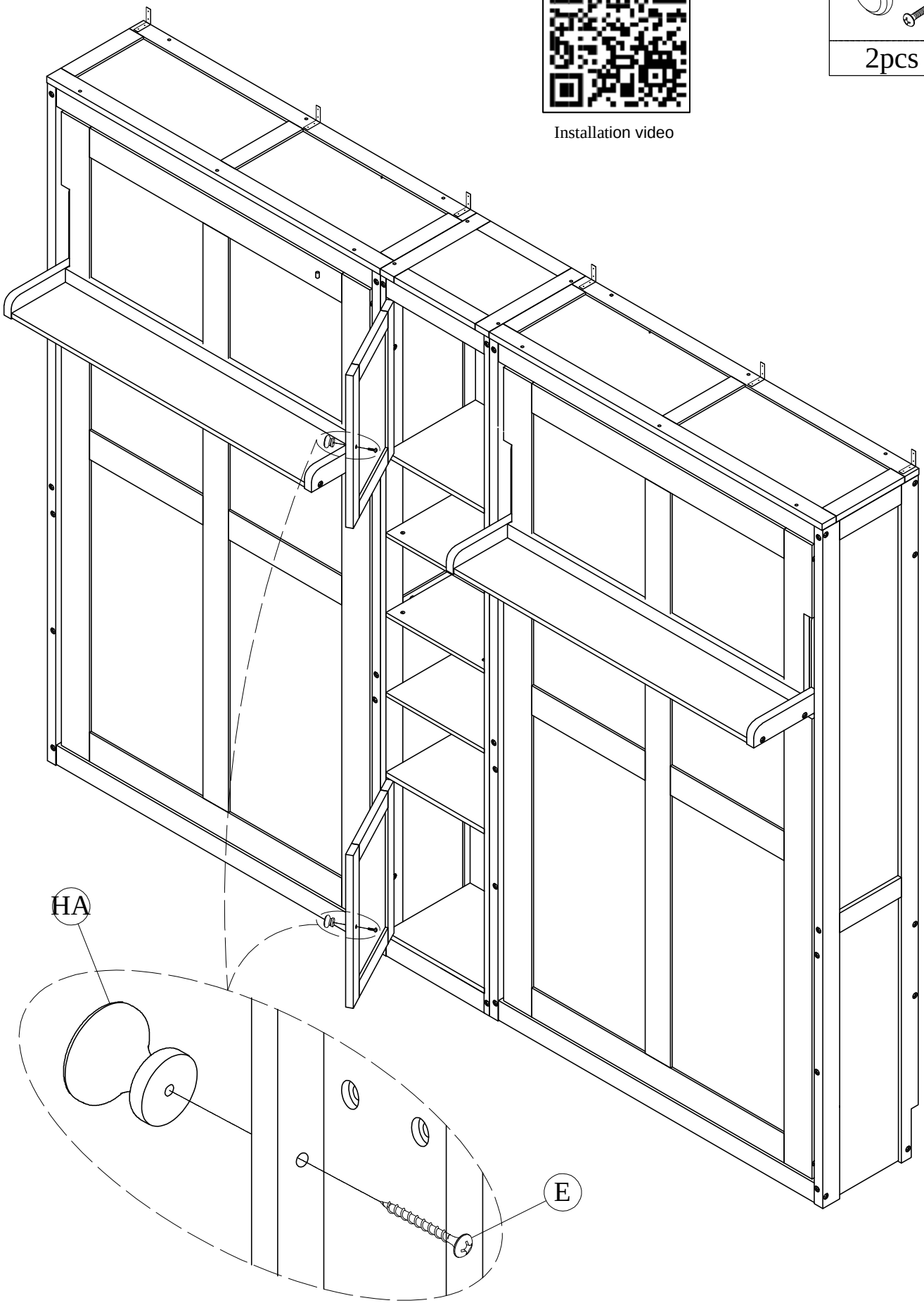

STEP42: .

JA

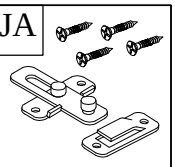

4pcs

Installation video

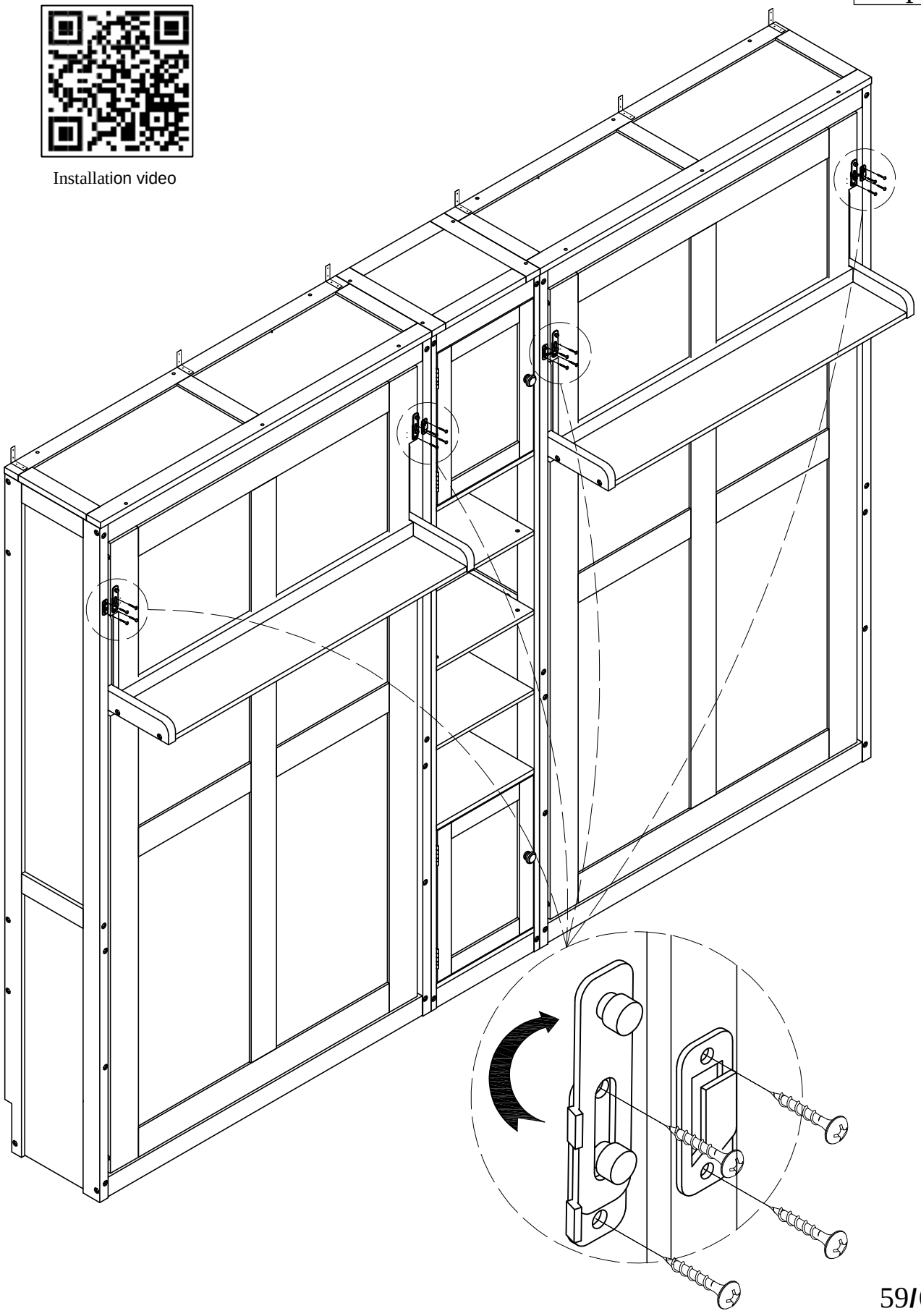

STEP43: .

CC	O
1pc	4pcs

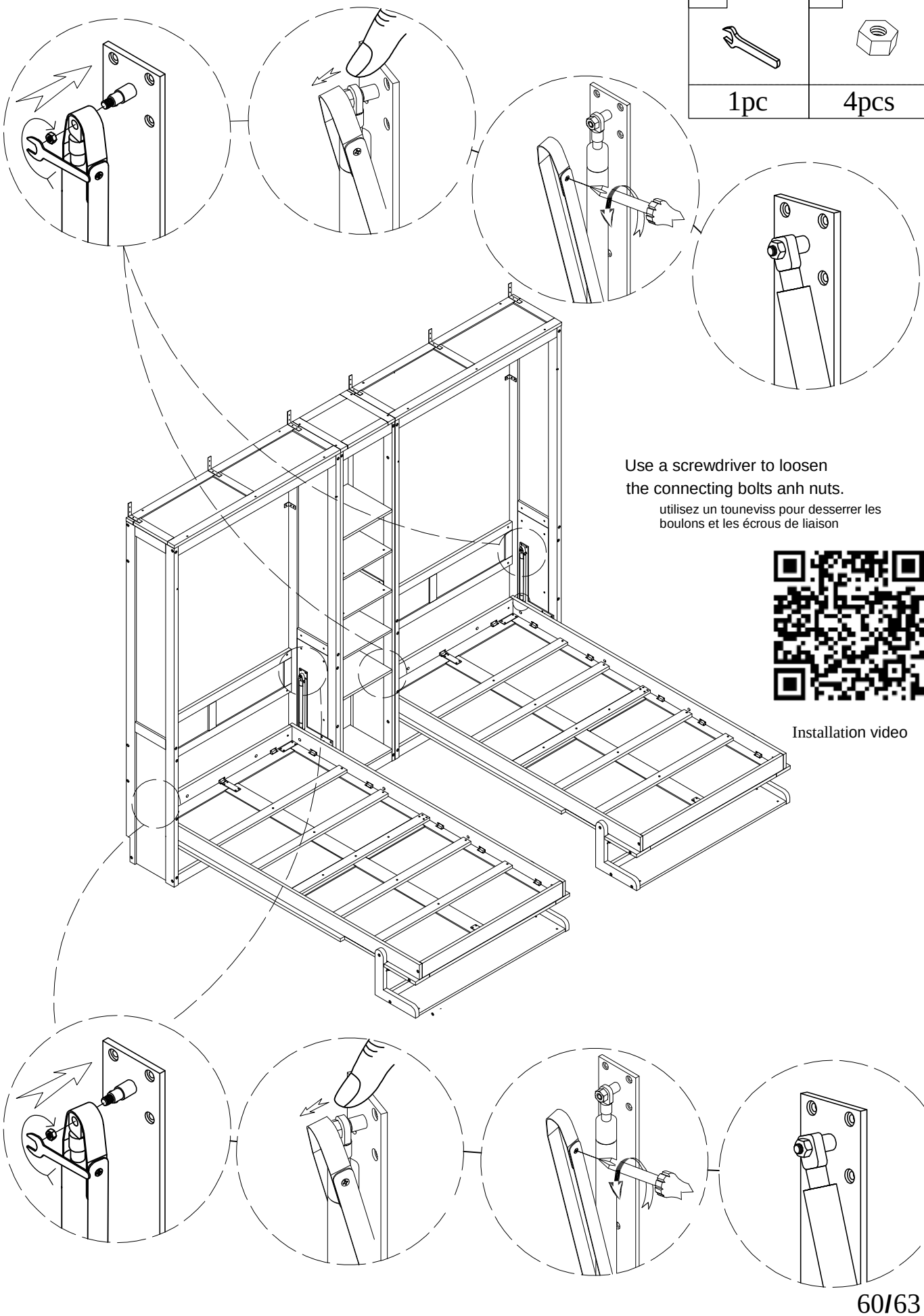

Use a screwdriver to loosen
the connecting bolts anh nuts.

utilisez un touneviss pour desserrer les
boulons et les écrous de liaison

Installation video

OPTION 1:

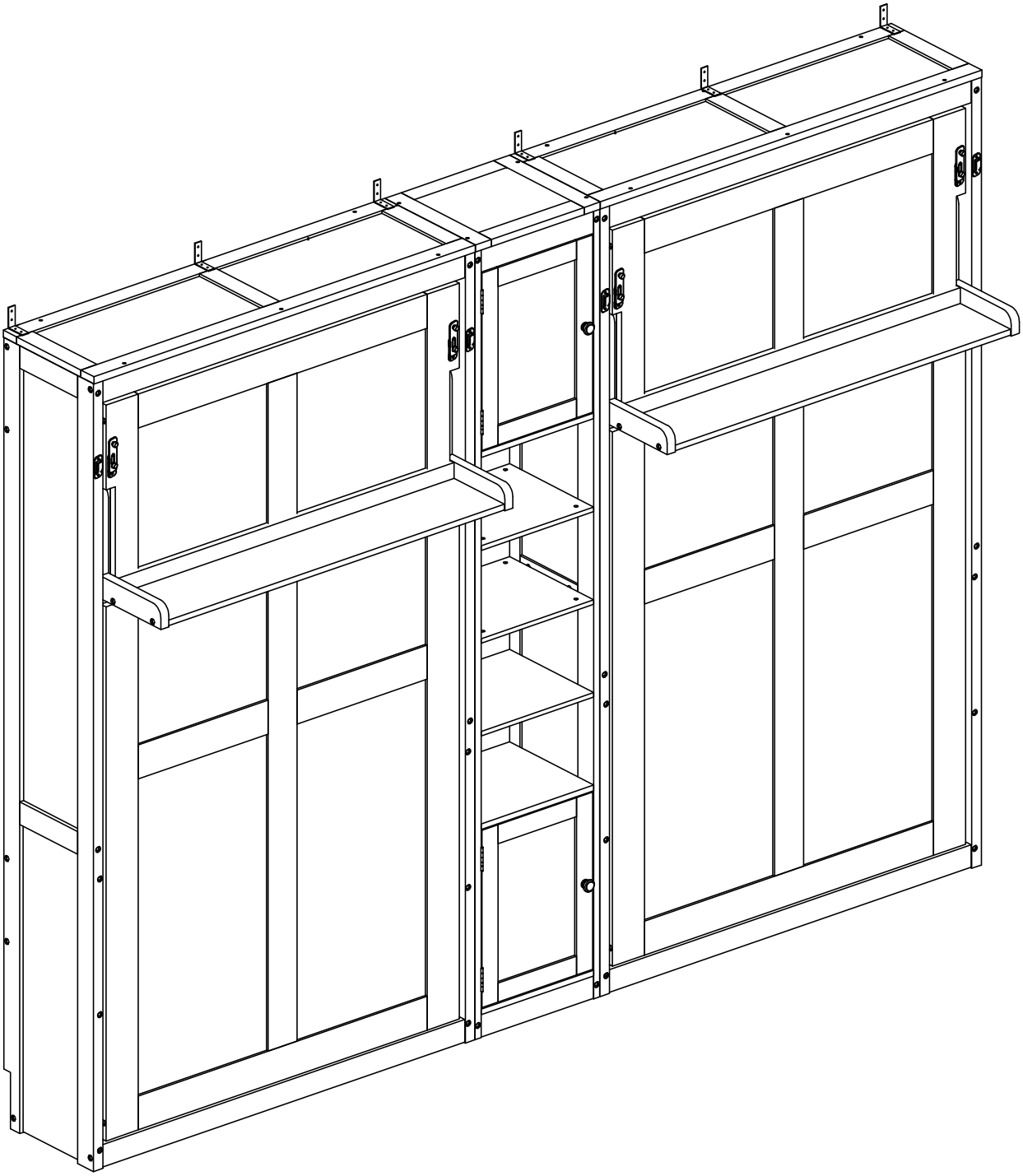

OPTION 2:

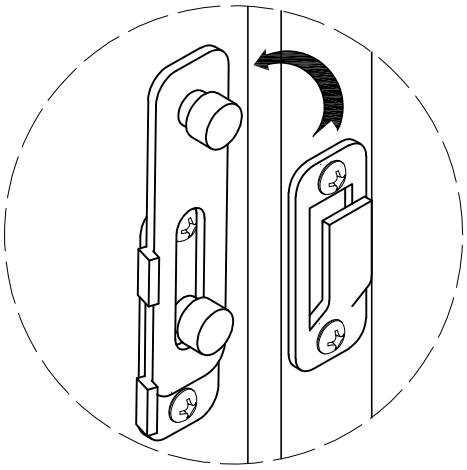

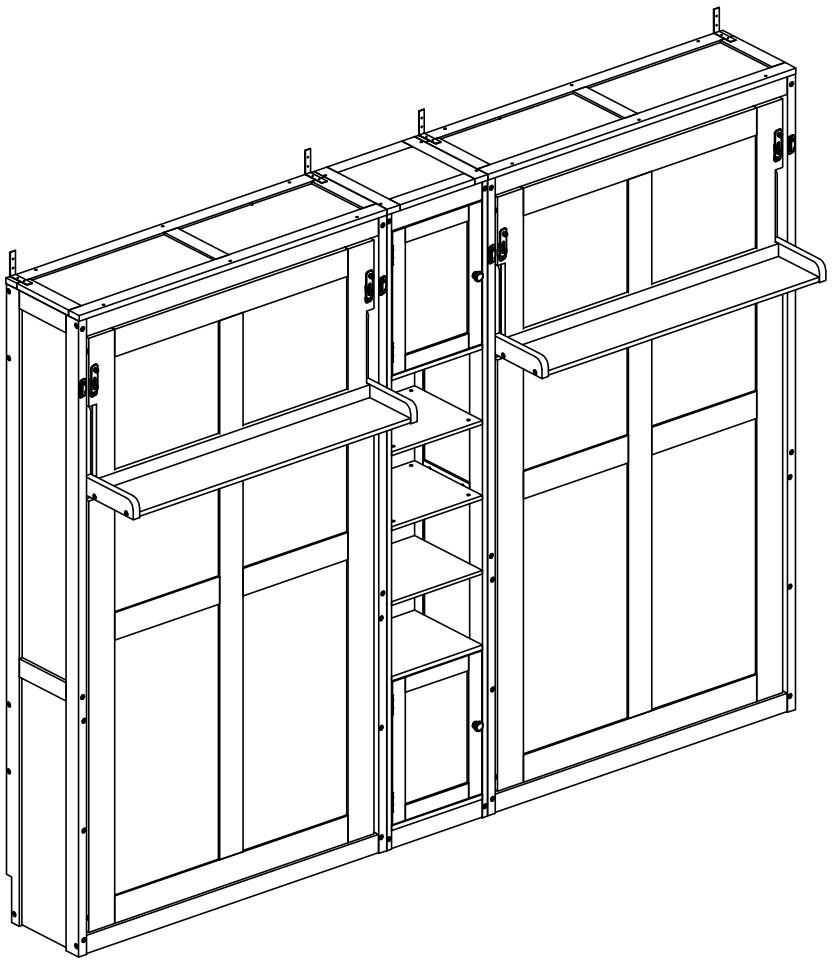

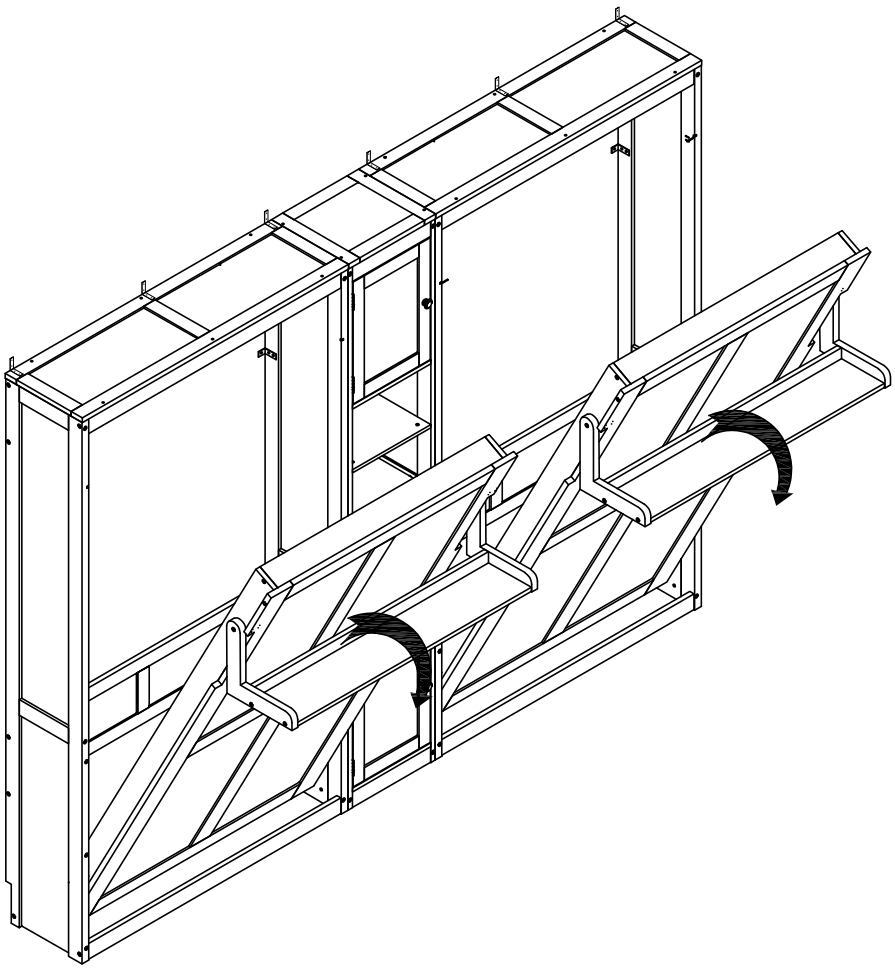

OPTION 2:

