Instruction Manual

Please save this manual for future reference.

Product Name:	Mid Century Modern Gray Upholstered Dining Chair

Thank you for purchasing this product. This product has been manufactured with the highest standards of safety and quality.

PLEASE READ ALL INSTRUCTIONS CAREFULLY BEFORE ASSEMBLY.
Unpack all parts from the packaging inside the carton to ensure there are no missing or damaged parts. Place all wooden furniture parts on a clean, flat and soft surface to prevent scratches. Refer to the steps provided below for assembly.

Do not attempt to assemble or use the product if any parts are missing or damaged.

PART LIST

ITEM	DESCRIPTION	QTY
A	Backrest	1 PC
B	Front Leg	2 PCS
C	Box Seat	1 PC
D	Seat	1 PC

HARDWARE LIST

ITEM	DESCRIPTION	QTY
1	JCBC Screw M6 x 70mm	4 PCS
2	JCBC Screw M6 x 60mm	4 PCS
3	JCBC Screw M6 x 35mm	2 PCS
4	Spring Washer M6 x 13mm	10 PCS
5	Flat Washer M7 x 19mm	10 PCS
6	Allen Key M4 x 55mm	1 PC
7	CSK Screw M4 x 30mm	3 PCS

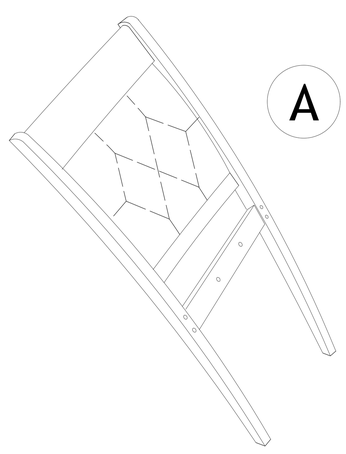

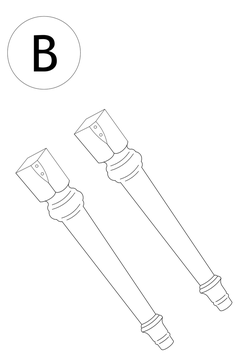

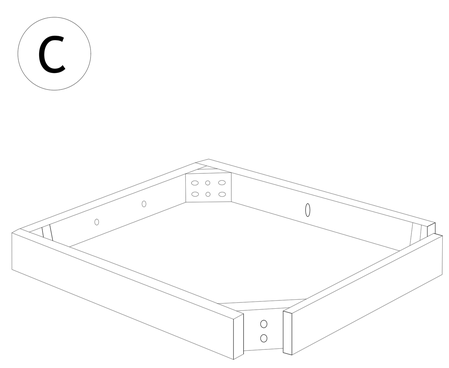

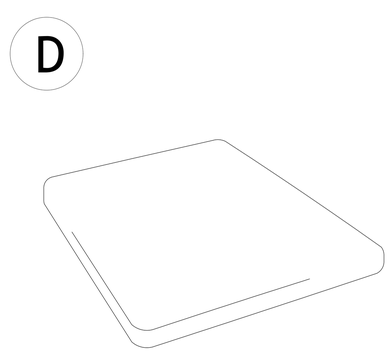

STEP 1

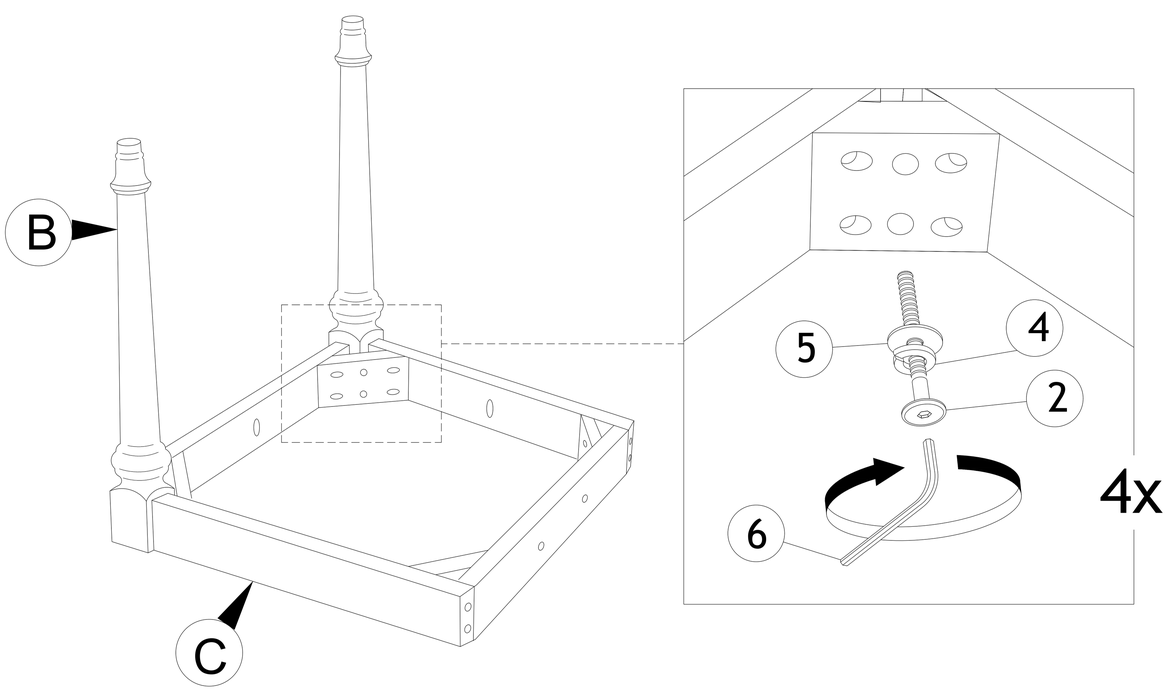

STEP 2

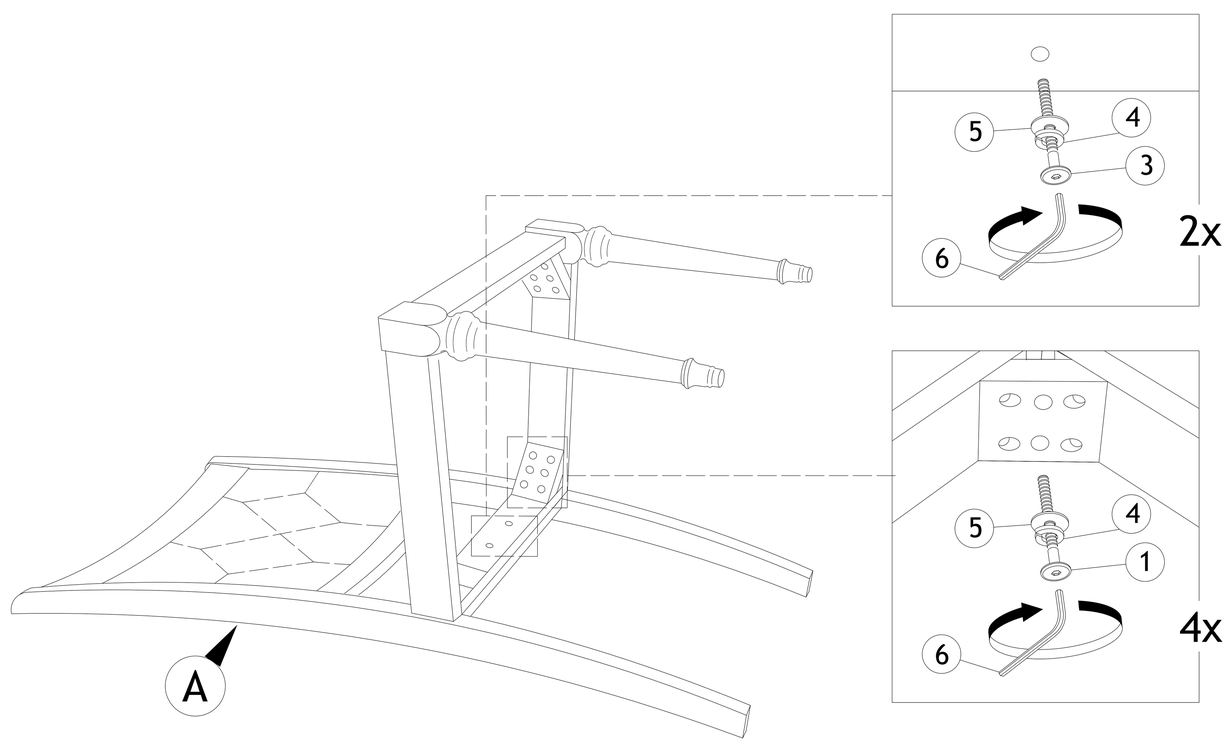

STEP 3

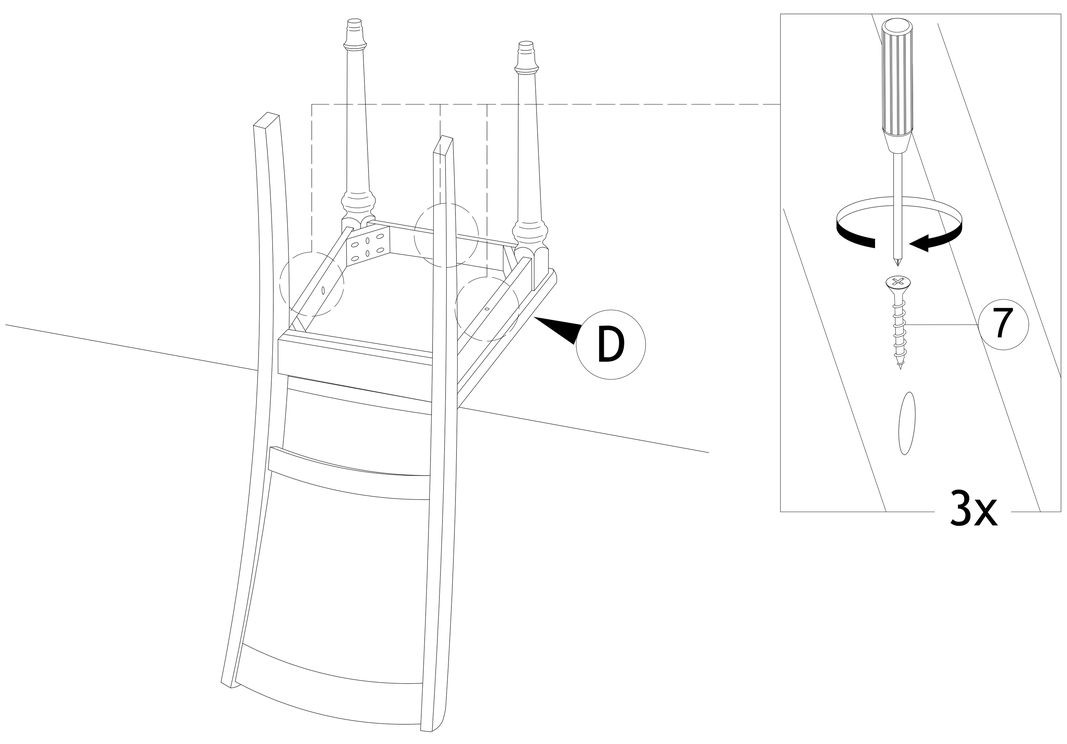

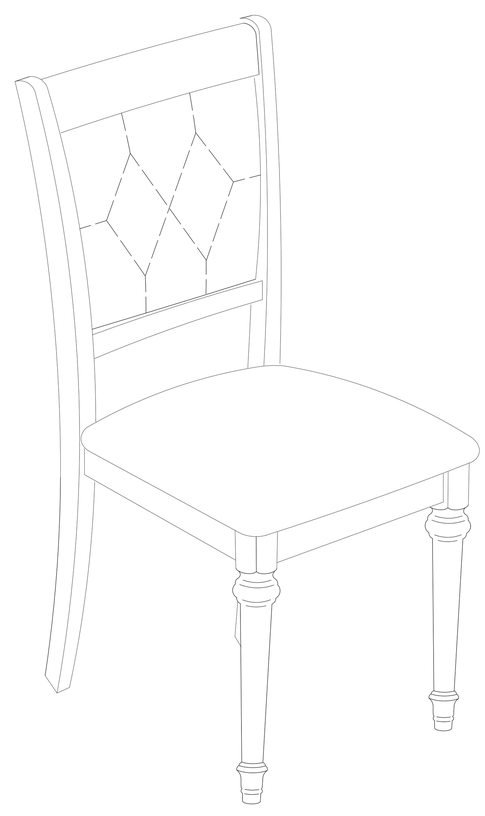

COMPLETED ASSEMBLY