TV Stand

Assembly Instruction – Please keep properly for future reference.

If you find any missing boxes, damaged parts, or accessory shortages, please contact the customer service team of your purchasing channel immediately. We will resolve the issue as quickly as possible.

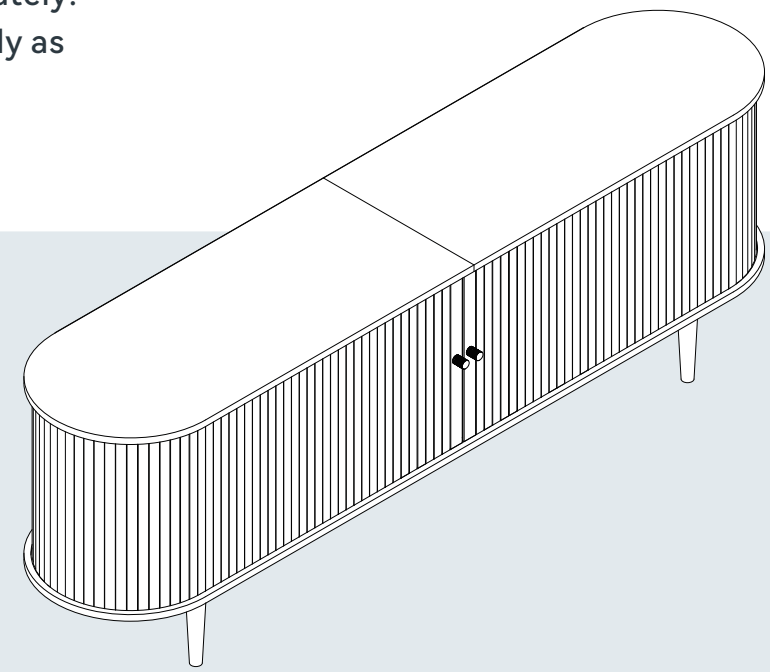

CONTACT US

- **Email: service@grandtunnel.com**
  In order to receive assistance more quickly, please provide

THE FOLLOWING INFORMATION:

- Order number
- Purchase platform
- Purchase date
- Detailed description of the issue along with photos (if applicable)

Important – Please read these instructions carefully before starting the installation.

EN

EN

Before Assembly

Thank you for choosing our product!
To ensure a smooth installation process, please read this guide carefully to familiarize yourself with the required tools, materials, and installation steps.
Follow the relevant sections to avoid any damage caused by improper installation, and make sure to review all operation and safety guidelines for correct installation procedures.

Packaging Notice:

If you find any missing boxes, damaged parts, or accessory shortages, please contact the customer service team of your purchasing channel immediately. We will resolve the issue as quickly as possible.

Safety and Care Advice

Important :
Please read these instructions fully before starting assembly.

- Check you have all the components and tools listed on the following pages.
- Remove all fittings from the plastic bags and separate them into their groups.
- Keep children and animals away from the work area, small parts could choke if swallowed.
- Make sure you have enough space to layout the parts before starting.
- During assembly do not stand or put weight on the product, this could cause damage.
- Assemble the item as close to its final position (in the same room) as possible.
- Assemble on a soft level surface to avoid damaging the unit or your floor.
- Parts of the assembly will be easier with 2 people.

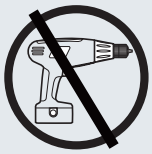

- To reduce the likelihood of damaging your product please ensure that your power drill is set on a low torque setting.

Email : **service@grandtunnel.com**

Care and Maintenance

- Only clean using a damp cloth and mild detergent, do not use bleach or abrasive cleaners.
- From time to time check that there are no loose screws on this unit.
- This product should not be discarded with household waste. Take to your local authority waste disposal center.

Handy Hints

- Assemble all parts and bolts loosely during assembly, only once the product is complete should you fully tighten the bolts.
- Regularly check and ensure that all bolts and fittings are tightened properly.

Warning

In order to help prevent overturning, please follow these instructions.

- Use the anti tip strap or wall fixing method provided (if applicable).
- Do not allow children to climb or hang on the furniture.
- Do not open more than one drawer at a time.
- Do not place heavy items in the top drawers.
- Do not place heavy items on top of the furniture, unless the furniture has been designed for this purpose.
- Please note that only the anti tip strap is provided. You will need to provide wall plugs and screws applicable for your wall type.

EN

Customer Service Guide

Thank you for choosing our product! We are committed to providing you with excellent service. If you find any missing parts, damaged packaging, or product damage after receiving all packages, please follow the steps below to quickly contact our customer service team. We will do our best to resolve your issue.

1. Missing Parts

Verify Parts:

1. Refer to the “Parts List” in the manual to verify the name, specifications, and quantity of the missing parts.
2. Take a clear photo of the parts list and mark the missing parts with detailed information, e.g., “Missing 5 pieces of M6×30mm screws.”

Contact Us:

By Email:

Send an email to **service@grandtunnel.com**, with the subject line “Missing Parts Issue.” Include the following in the email:

- A description of the missing parts and a photo of the parts list.
- Order details (order number, purchase platform, purchase date).

2. Product or Packaging Damage

If it affects normal use:

Steps:

1. Take clear photos or videos showing the damaged parts and the extent of the damage (multi-angle shots are recommended).
2. Email the photos/videos along with order details to **service@grandtunnel.com**, with the subject line “Product Damage Issue.”

Resolution:

After verification, we will arrange for a replacement part, product exchange, or refund as quickly as possible.

Email : **service@grandtunnel.com**

If it does not affect normal use:

Steps:

1. Contact our customer service team (by email: **service@grandtunnel.com**).
2. Provide a description of the damage and include relevant photos or videos.

Resolution:

We will provide repair guidance or an appropriate compensation plan based on the specific situation.

Contact Us:

Customer Service Email: **service@grandtunnel.com**

Helpful Tips

To process your issue efficiently, please prepare the following information:

- Order details (order number, purchase platform, purchase date).
- Clear photos or videos.
- We are committed to providing quick and professional solutions, no matter the size of the issue, to ensure your satisfaction.

Thank you for your trust and support!
We hope you enjoy using our product!

Parts List - Panels

Please check you have all the panels listed below.

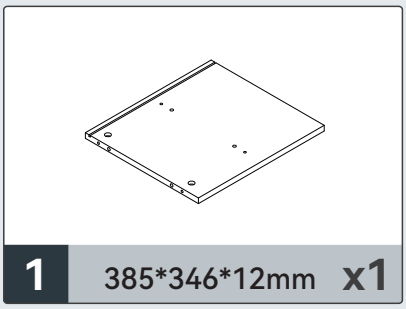

1 385*346*12mm x1

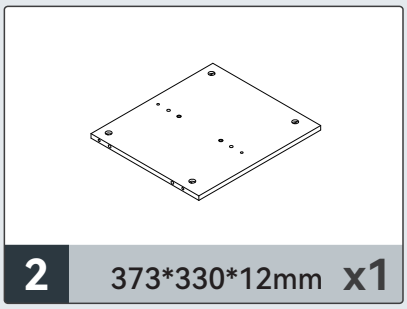

2 373*330*12mm x1

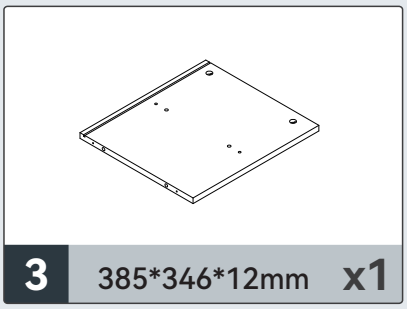

3 385*346*12mm x1

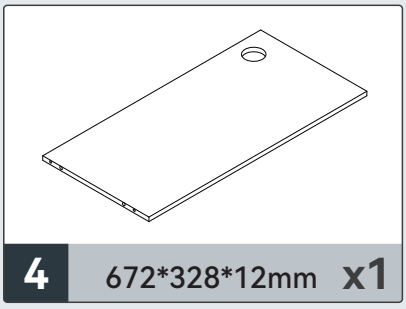

4 672*328*12mm x1

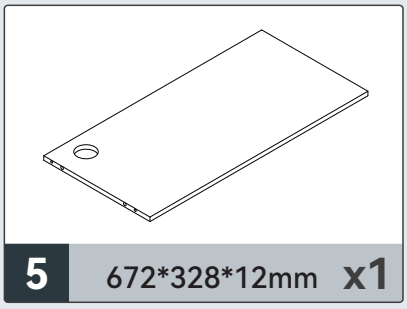

5 672*328*12mm x1

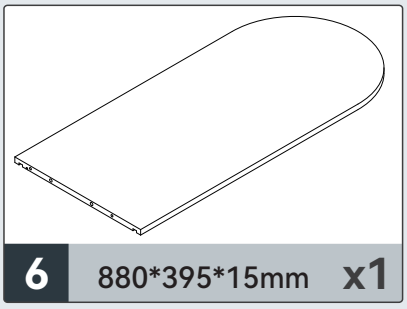

6 880*395*15mm x1

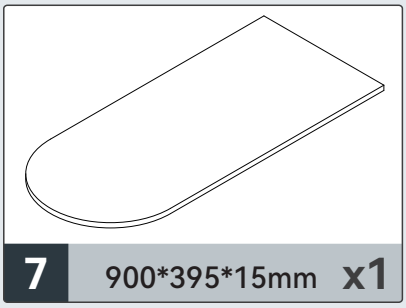

7 900*395*15mm x1

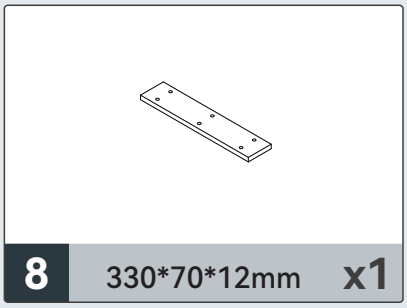

8 330*70*12mm x1

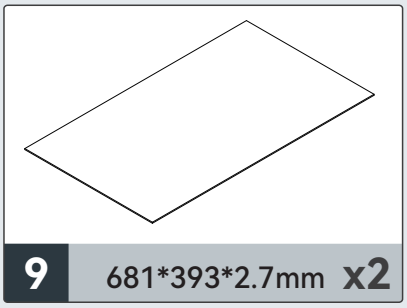

9 681*393*2.7mm x2

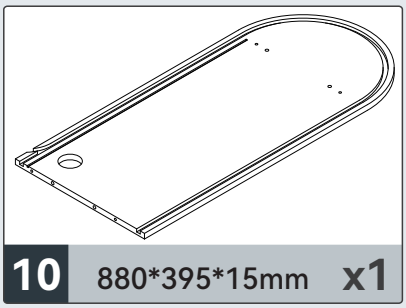

10 880*395*15mm x1

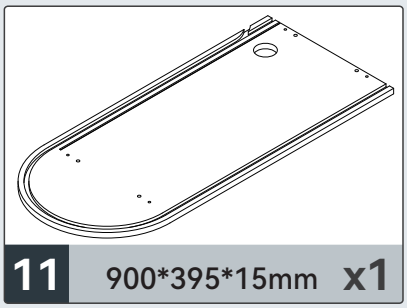

11 900*395*15mm x1

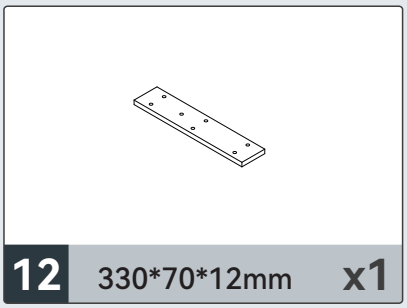

12 330*70*12mm x1

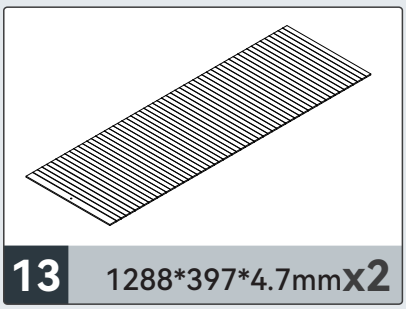

13 1288*397*4.7mmx2

Email : **service@grandtunnel.com**

Parts List - Fittings

EN

Please check you have all the fittings listed below.

Note: The quantities below are the correct amount to complete the assembly.
In some cases more fittings may be supplied than required.



A Ø7x37mm **x18**



B Ø15x9.6mm **x18**



C Ø6x30mm **x16**



D Ø6x50mm **x6**

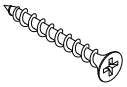

E Ø5x40mm **x6**



F Ø4x12mm **x20**

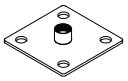

G Metal Plate **x5**

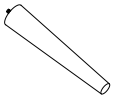

H Leg **x4**

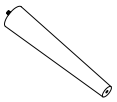

I Leg **x1**



J Adjustable foot **x1**

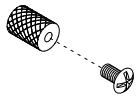

K Handle & Fixings **x2**



L Back Panel Stiffener **x10**



M Felt Pad **x4**

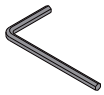

N Allen Key **x1**



O H bar **x1**



P Ø6x20mm **x12**

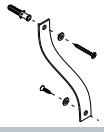

Q Wall Fixing Pack **x2**

Tools required

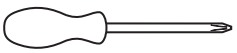

Phillips screwdriver
(medium & large)

Ruler

Use this ruler to help correctly identify the screws

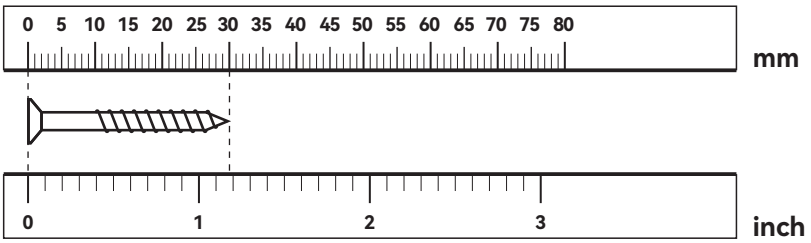

The screws length is measured from the head to the point (30mm screw shown).

Email : **service@grandtunnel.com**

Using Camlocks

Step 1

Connect the male camlock as directed in the assembly instructions using a screwdriver.

DO NOT OVER TIGHTEN.

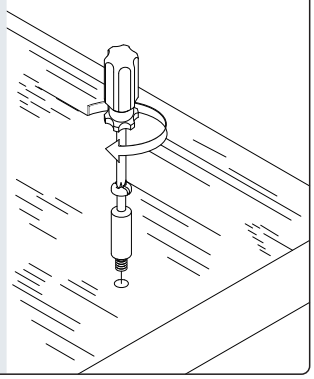

Step 2

Push the male camlock into the entry hole.

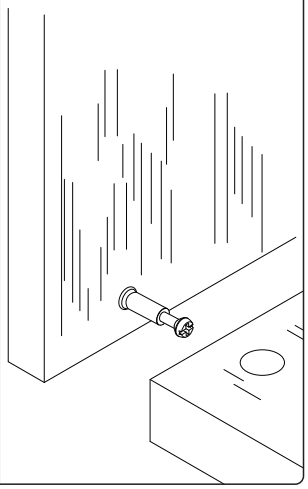

Step 3

Insert the female camlock as shown in the instructions.

Note: ensure that the arrow on the top of the camlock points towards the entry hole for the male camlock.

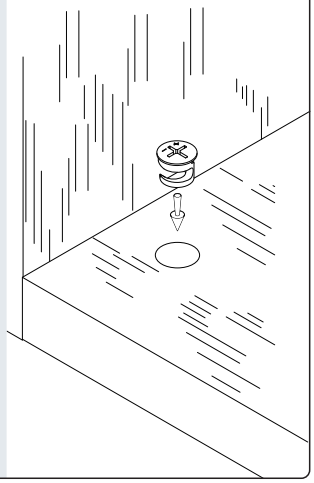

Step 4

Turn the female camlock clockwise with a screwdriver.

You should feel a click when the camlock is locked in place.

The joint is now secure.

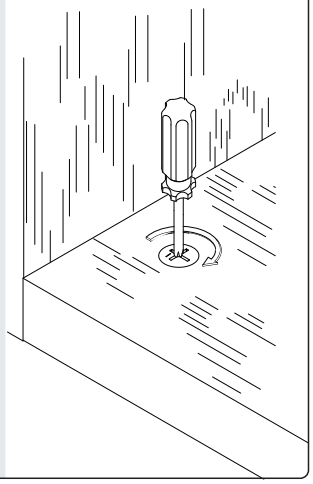

EN

Assembly Instructions

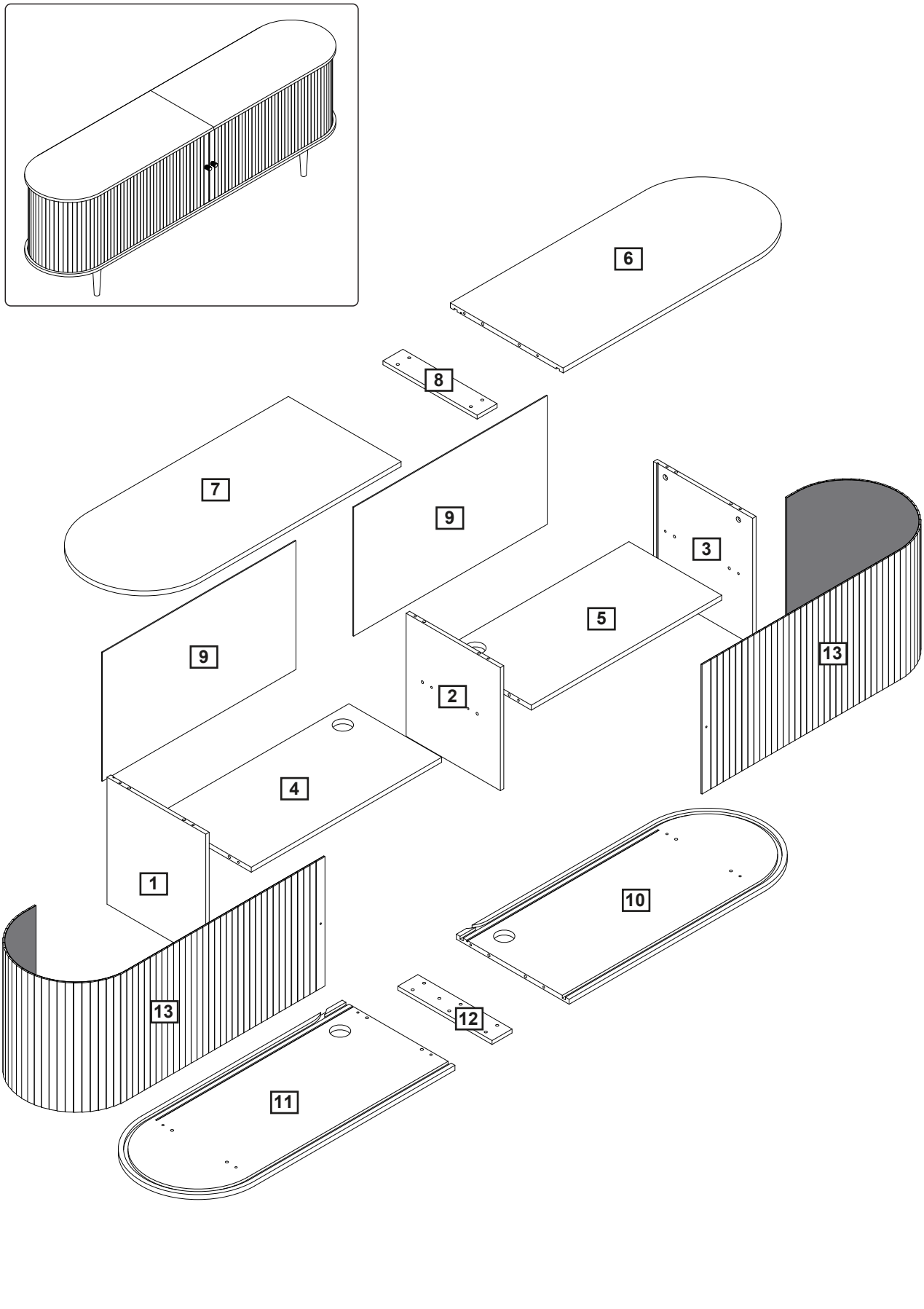

Email : **service@grandtunnel.com**

Step 1

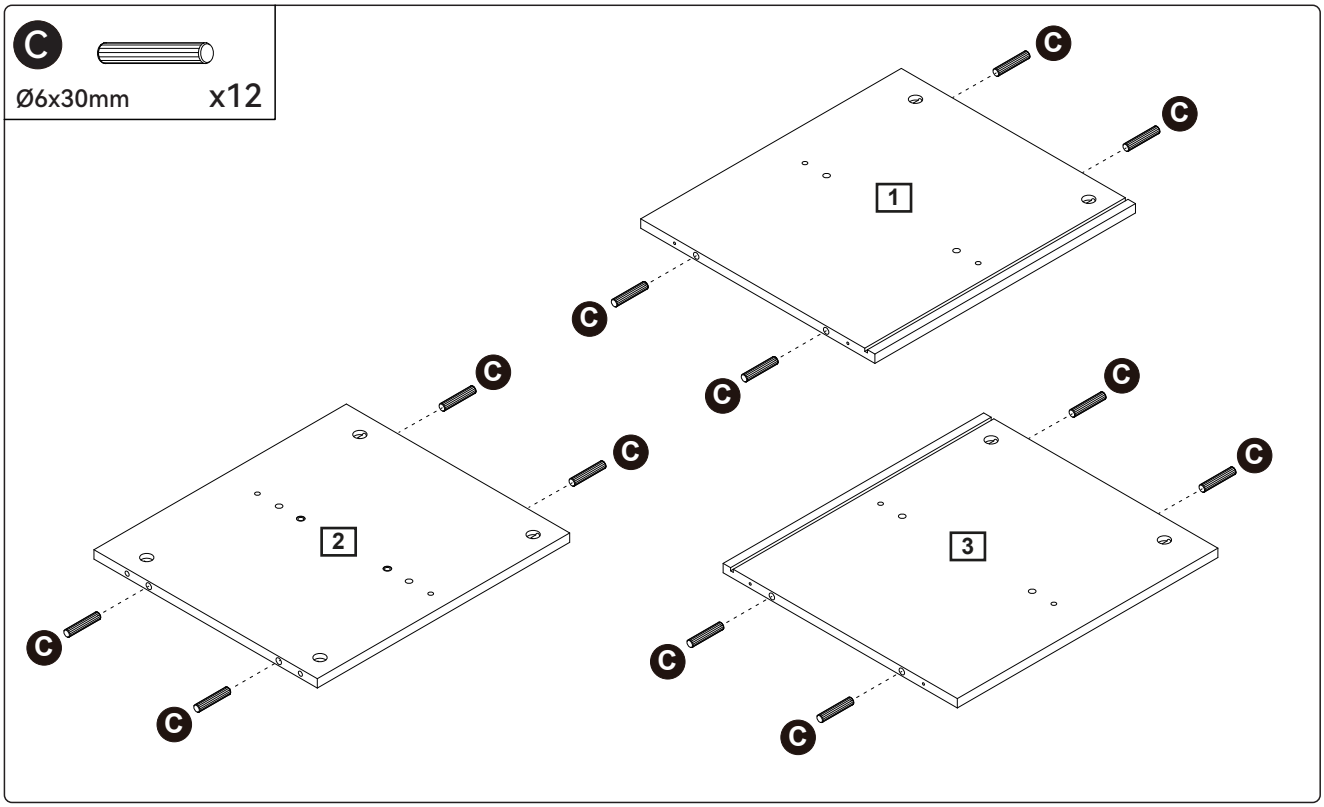

Insert wooden dowel (C) into part (1, 2, 3).

Step 2

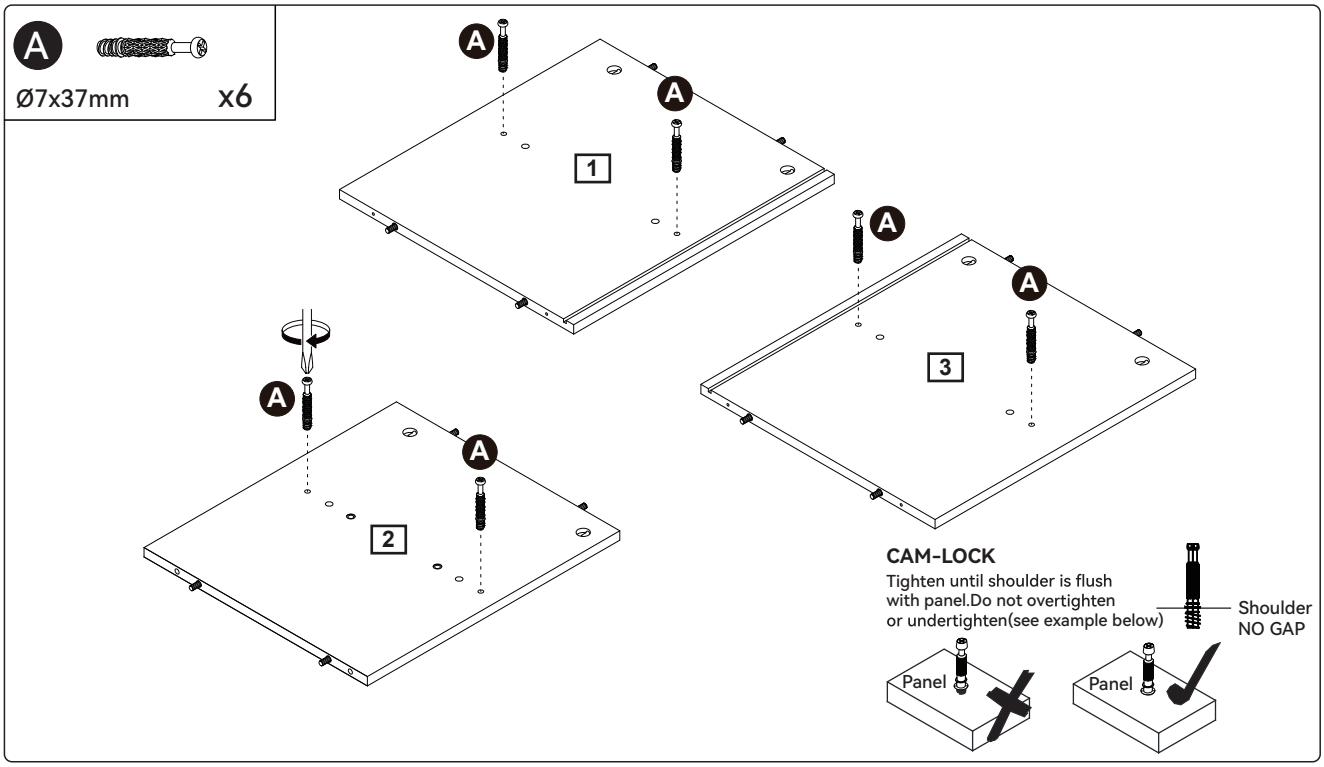

Attach cam bolt (A) to part (1, 2, 3) with a screwdriver.

Step 3

C
Ø6x30mm x2

D
Ø6x50mm x2

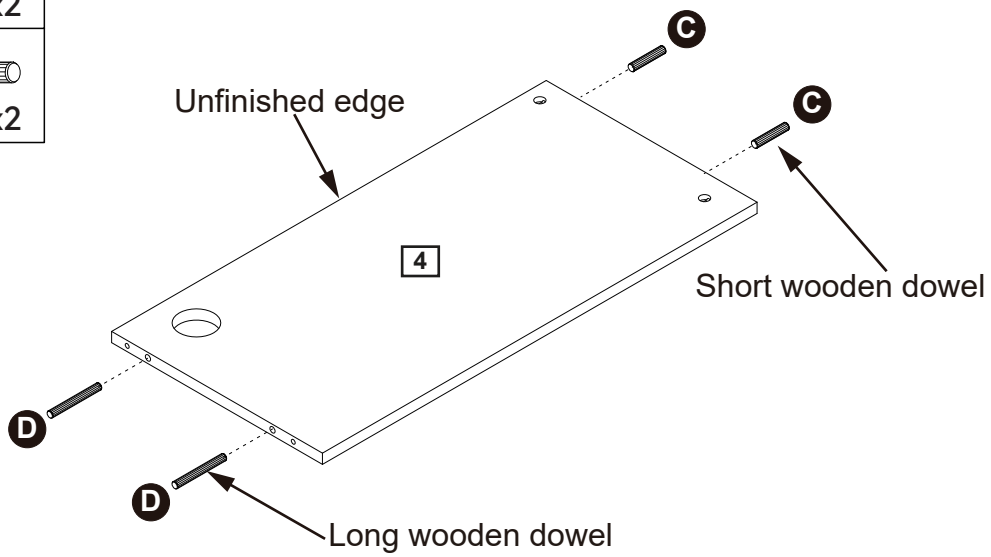

Insert wooden dowel (C, D) into part (4).

Step 4

B
Ø15x9.6mm x2

E
Ø5x40mm x2

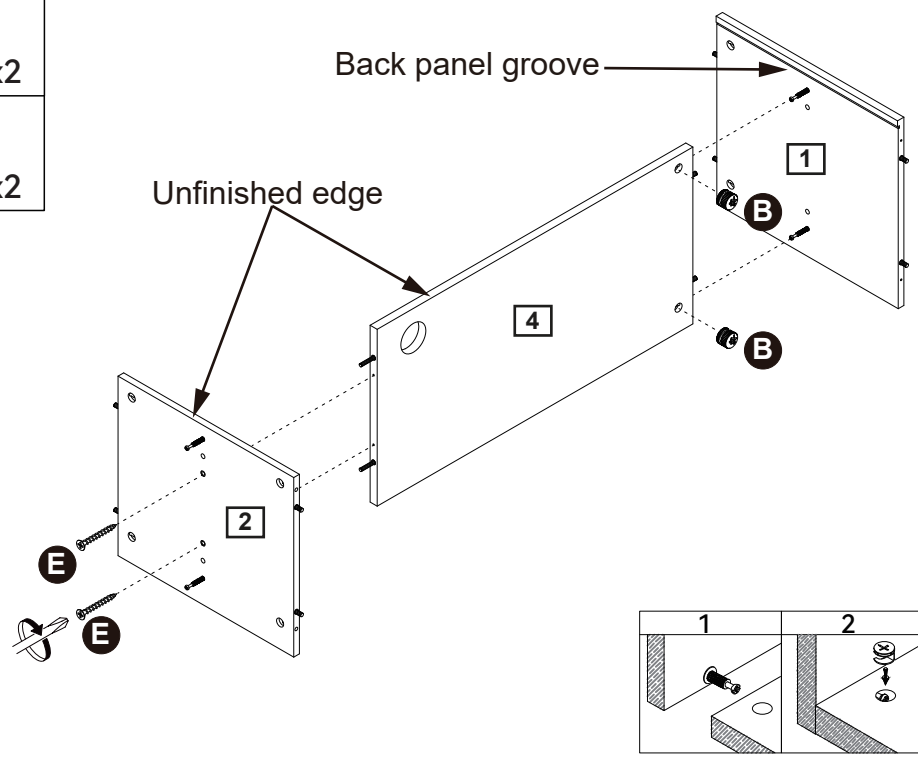

Attach part (1) to part (4), then insert and secure cam lock (B) to part (4) to lock it.
Attach part (2) to part (4) using screw (E) with a screwdriver.

Email : **service@grandtunnel.com**

Step 5

C
Ø6x30mm x2

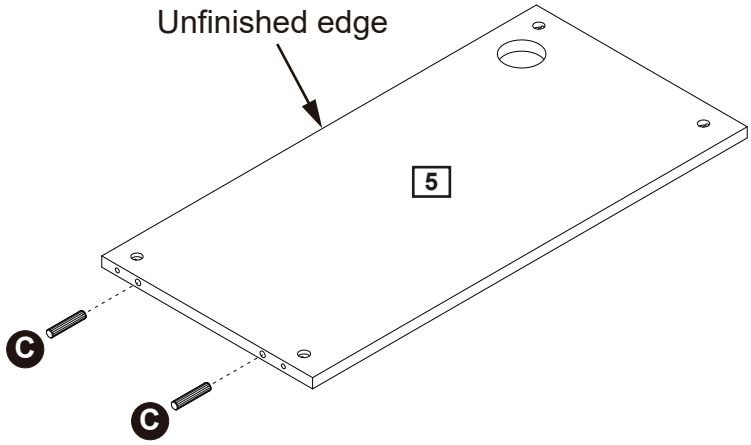

Insert wooden dowel (C) into part (5).

Step 6

B
Ø15x9.6mm x4

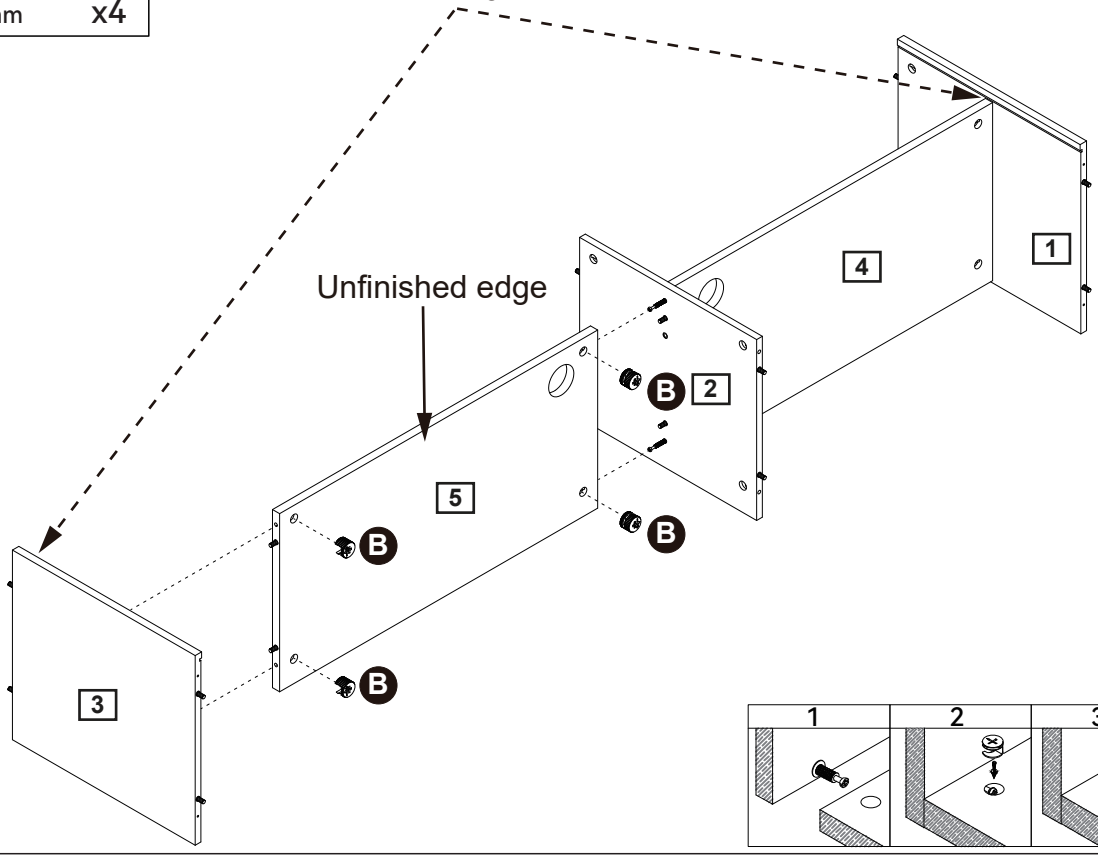

Attach part (2, 3) to part (5), then insert and secure cam lock (B) to part (5) to lock it.

Step 7

A
Ø7x37mm x2

D
Ø6x50mm x2

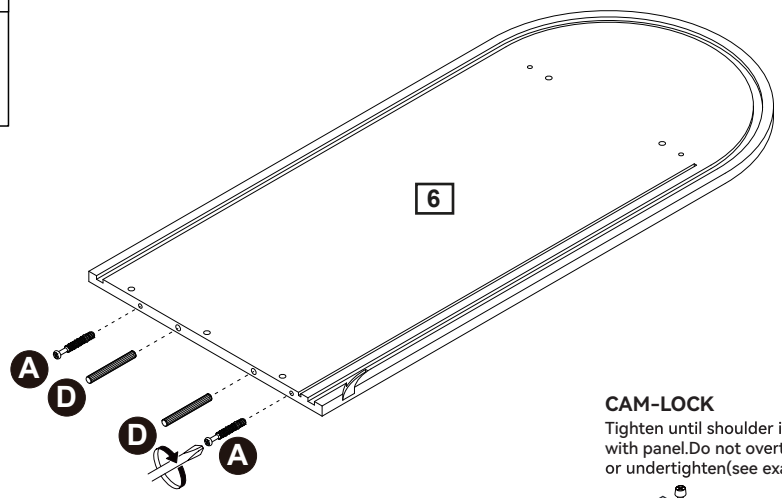

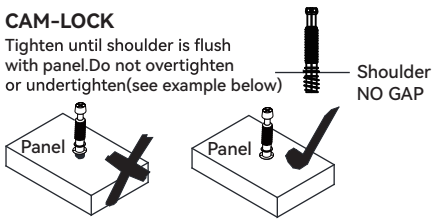

Attach cam bolt (A) to part (6) with a screwdriver.
Insert wooden dowel (D) into part (6).

Step 8

B
Ø15x9.6mm x2

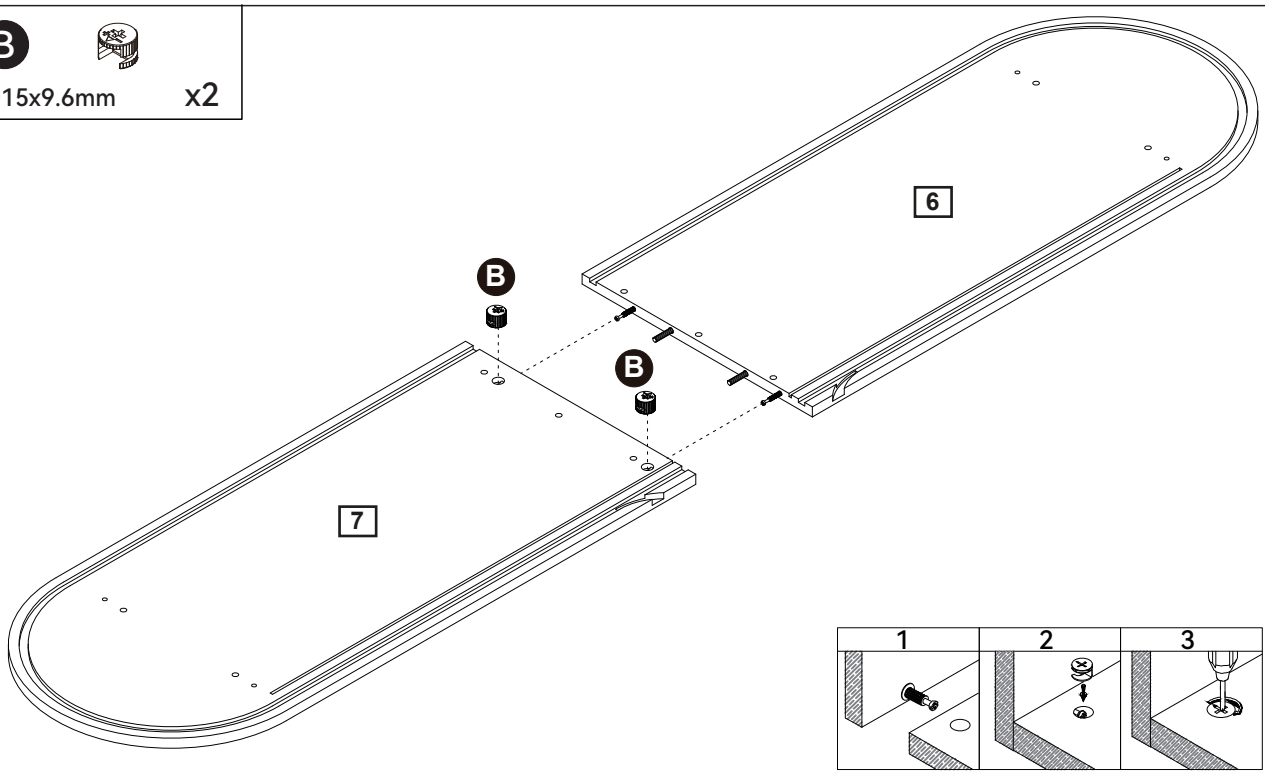

Attach part (6) to part (7), then insert and secure cam lock (B) to part (7) to lock it.

Email : **service@grandtunnel.com**

Step 9

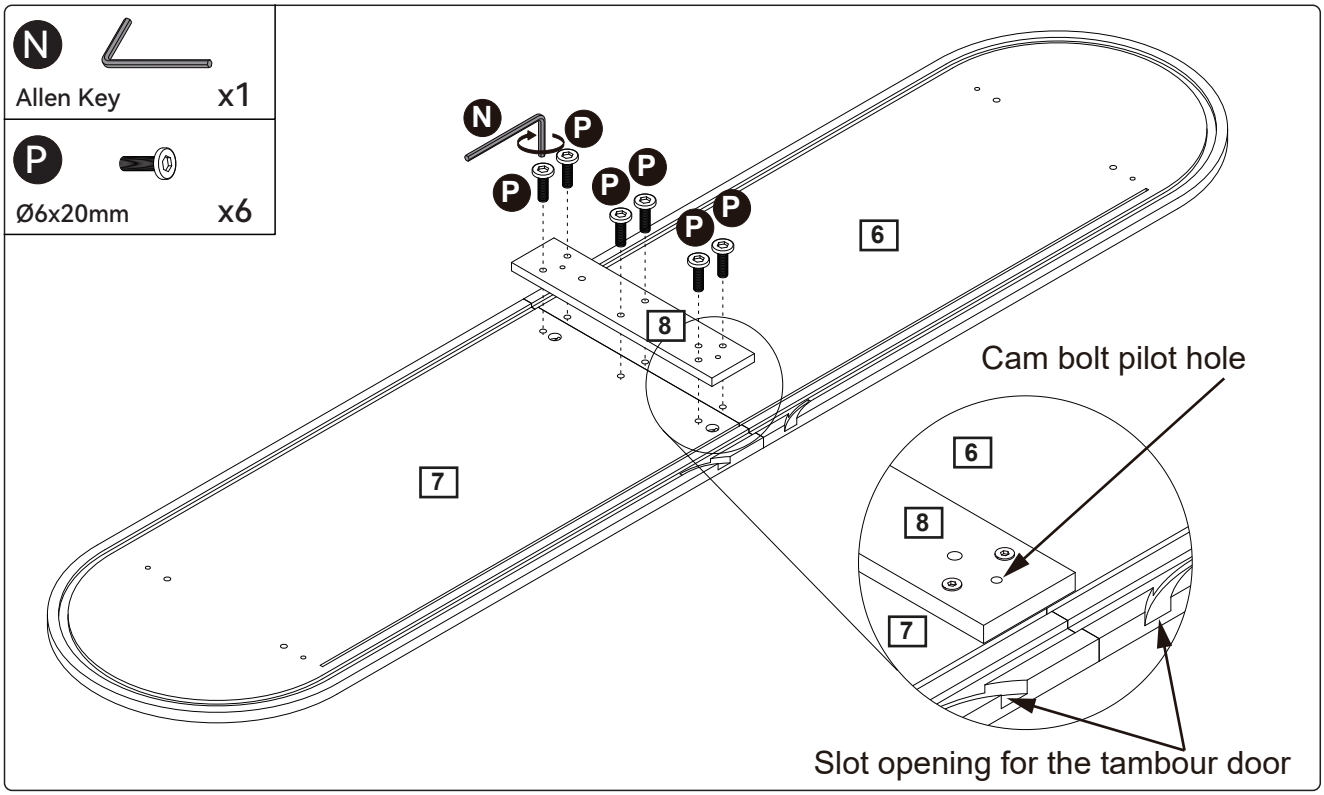

Attach part (8) to part (6, 7) using bolt (P) with allen key (N).

Step 10

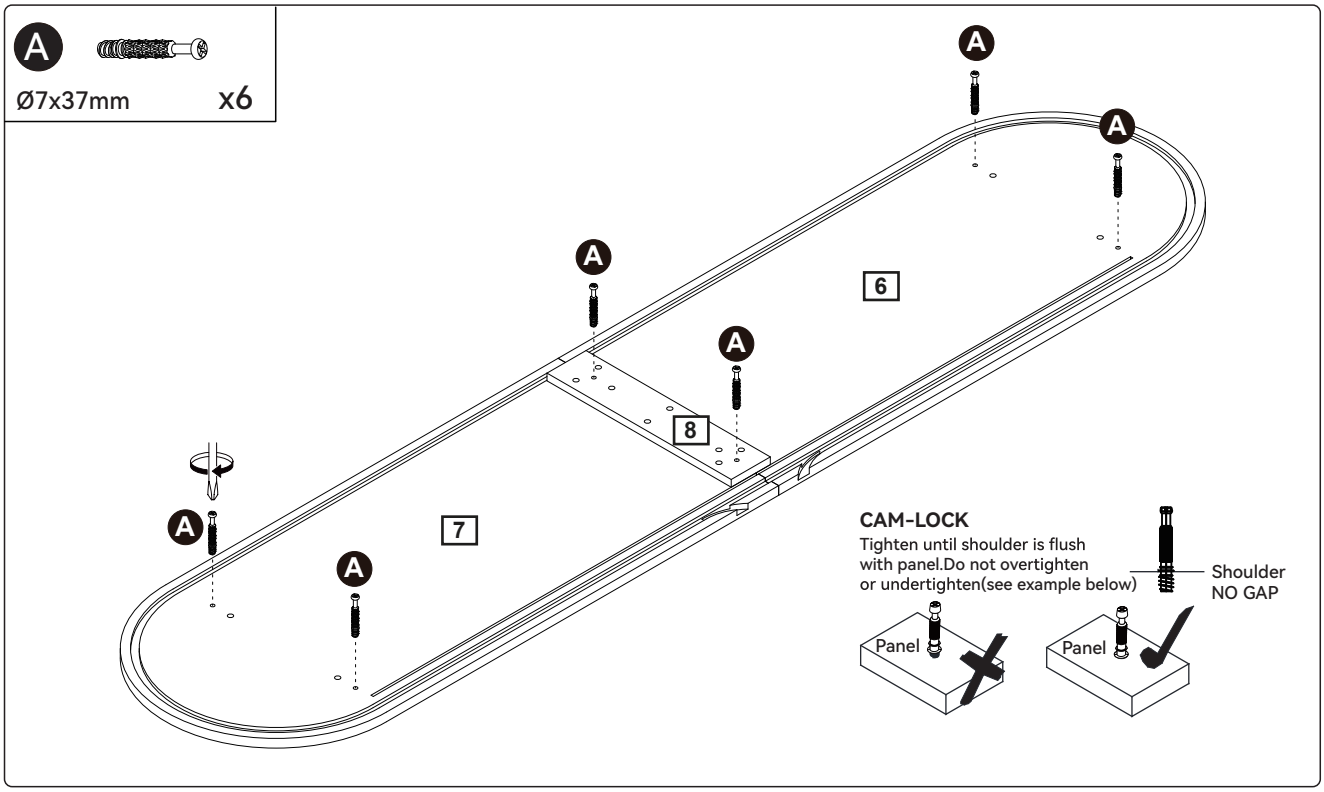

Attach cam bolt (A) to part (6, 7, 8) with a screwdriver.

Step 11

B



Ø15x9.6mm x6

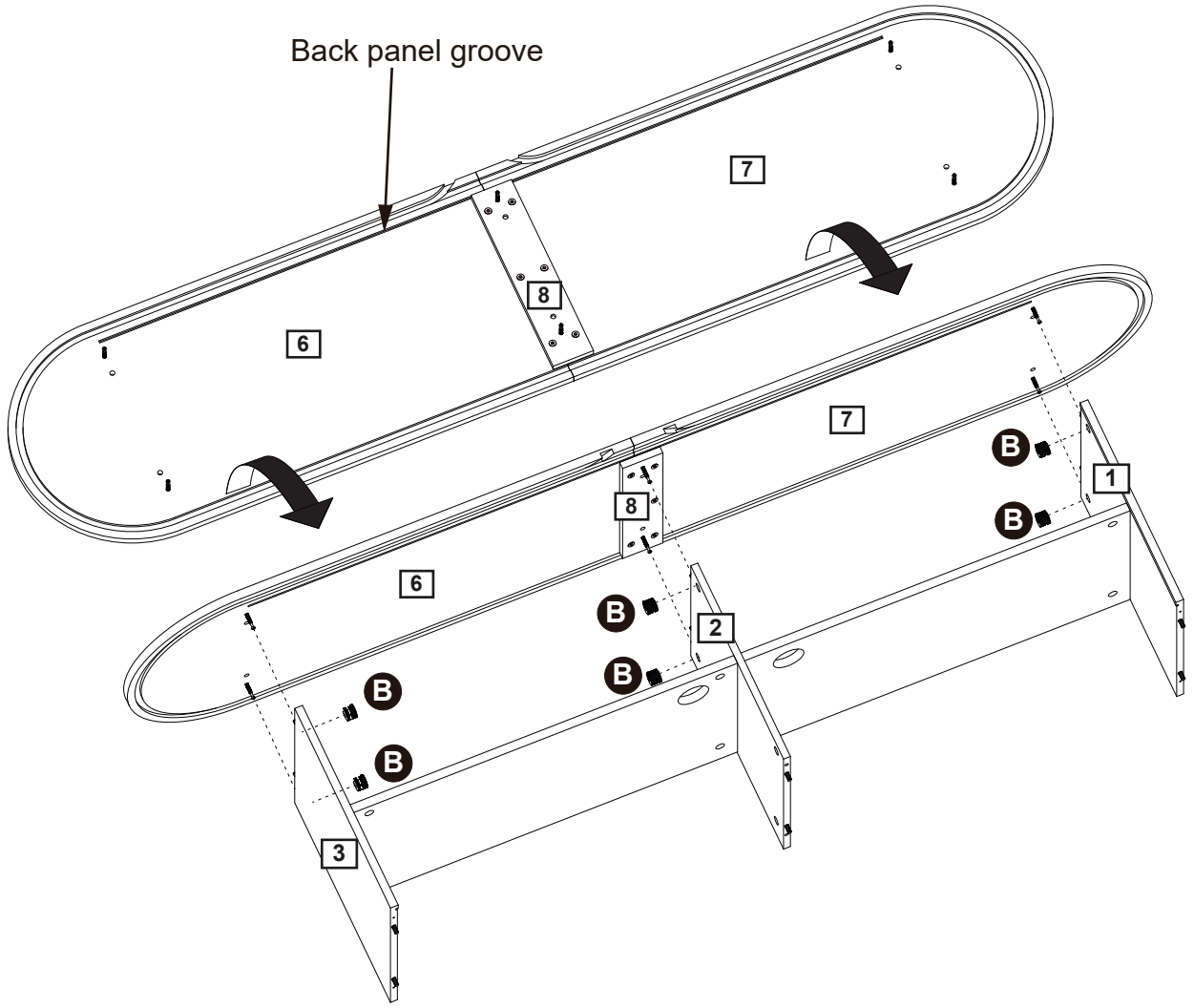

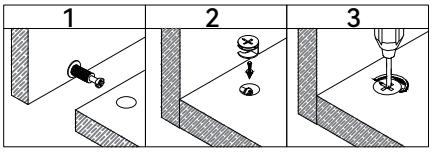

Attach part (6, 7, 8) to part (1, 2, 3), then insert and secure cam lock (B) to part (1, 2, 3) to lock it.

Email : **service@grandtunnel.com**

Step 12

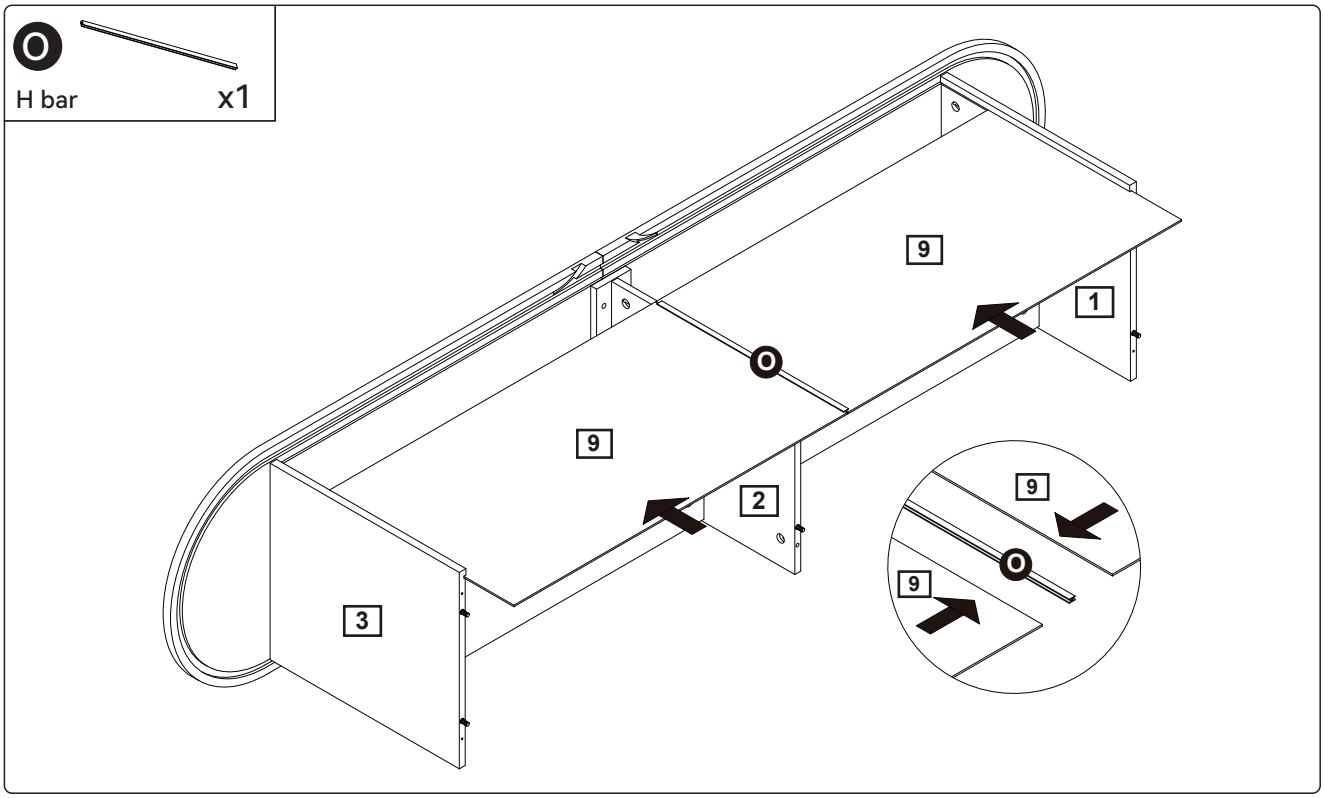

Slide the back panel (9) into grooves as per diagram.

Step 13

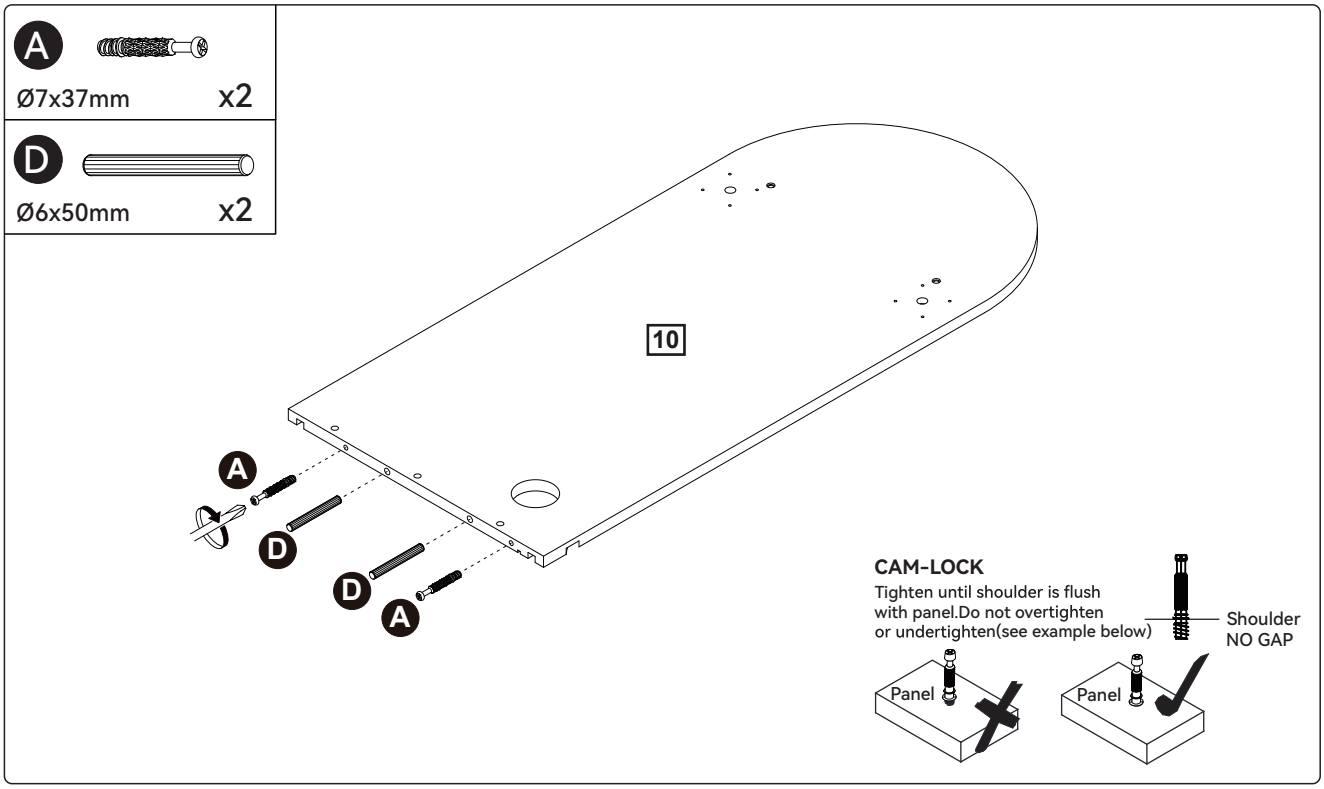

Attach cam bolt (A) to part (10) with a screwdriver.
Insert wooden dowel (D) into part (10).

Step 14

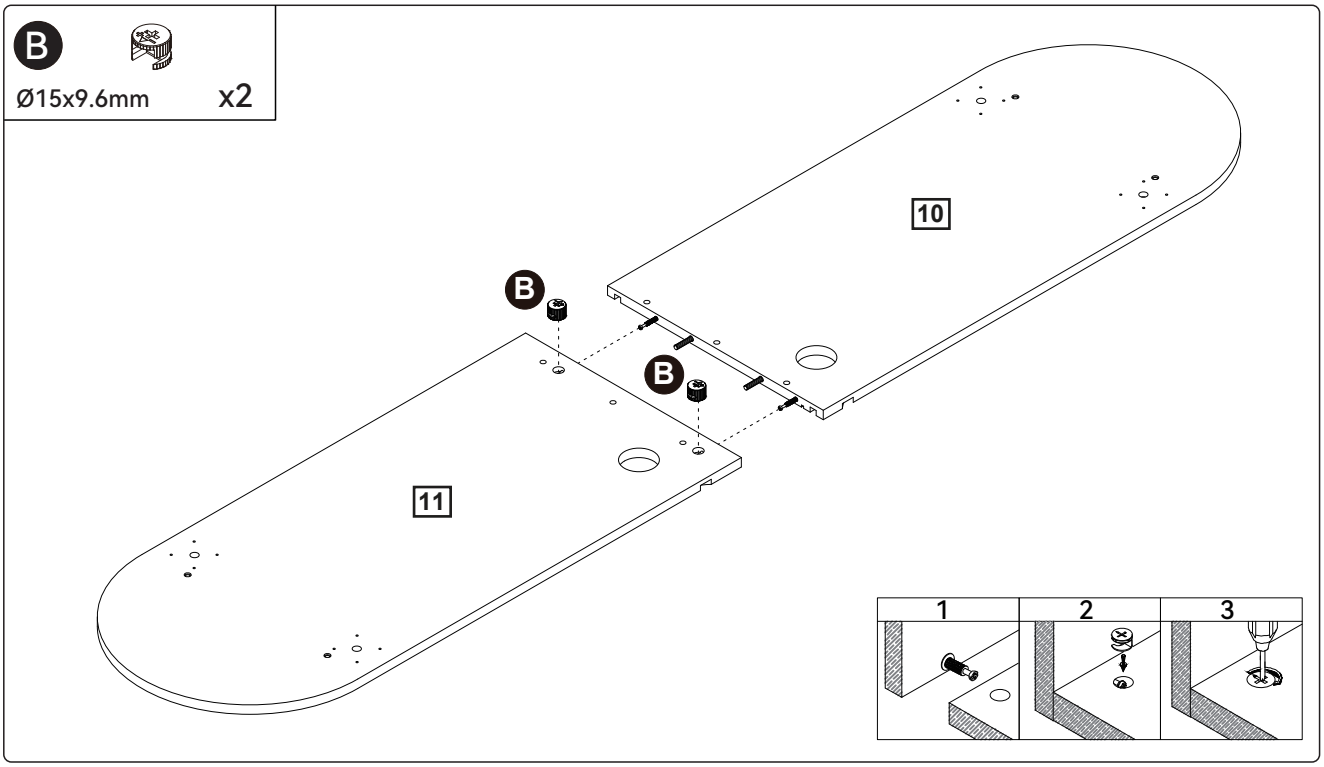

Attach part (11) to part (10), then insert and secure cam lock (B) to part (11) to lock it.

Step 15

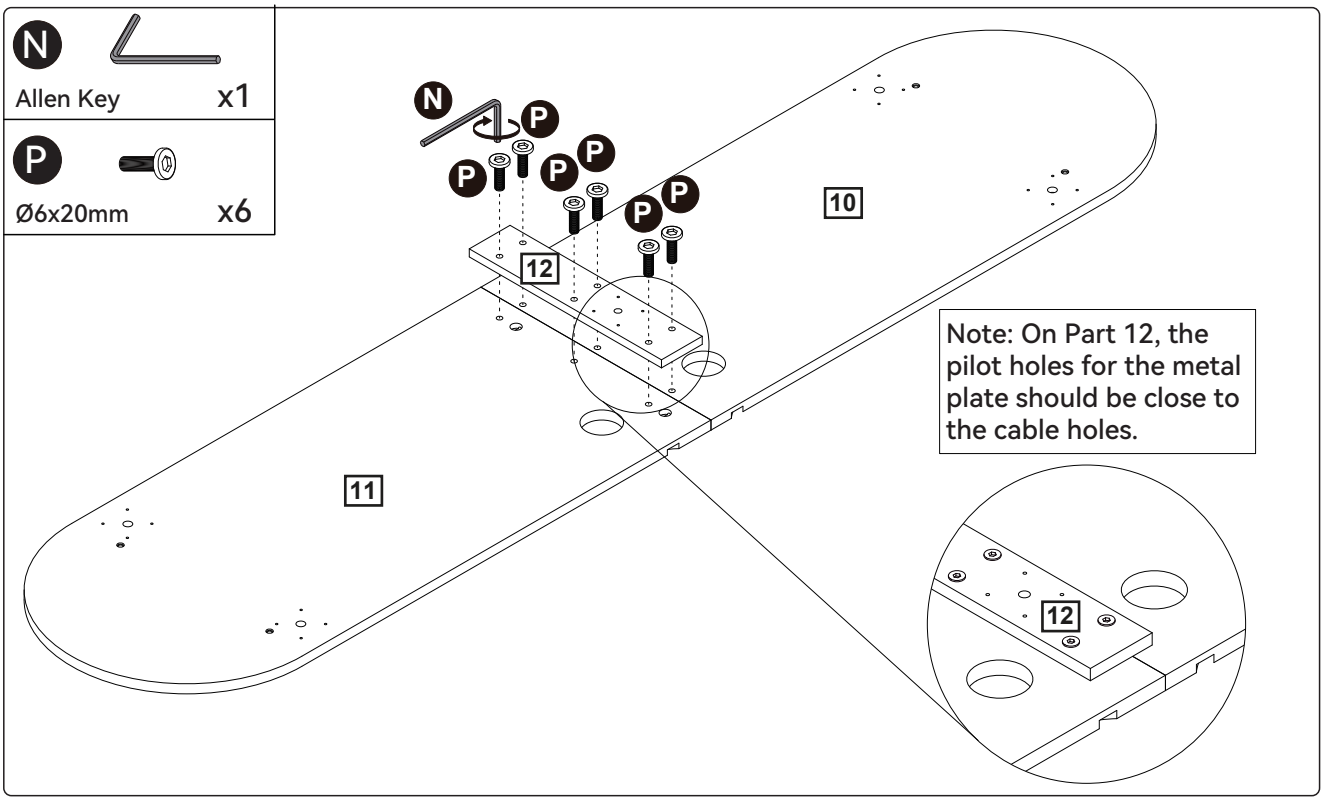

Attach part (12) to part (10, 11) using bolt (P) with allen key (N).

Email : **service@grandtunnel.com**

Step 16

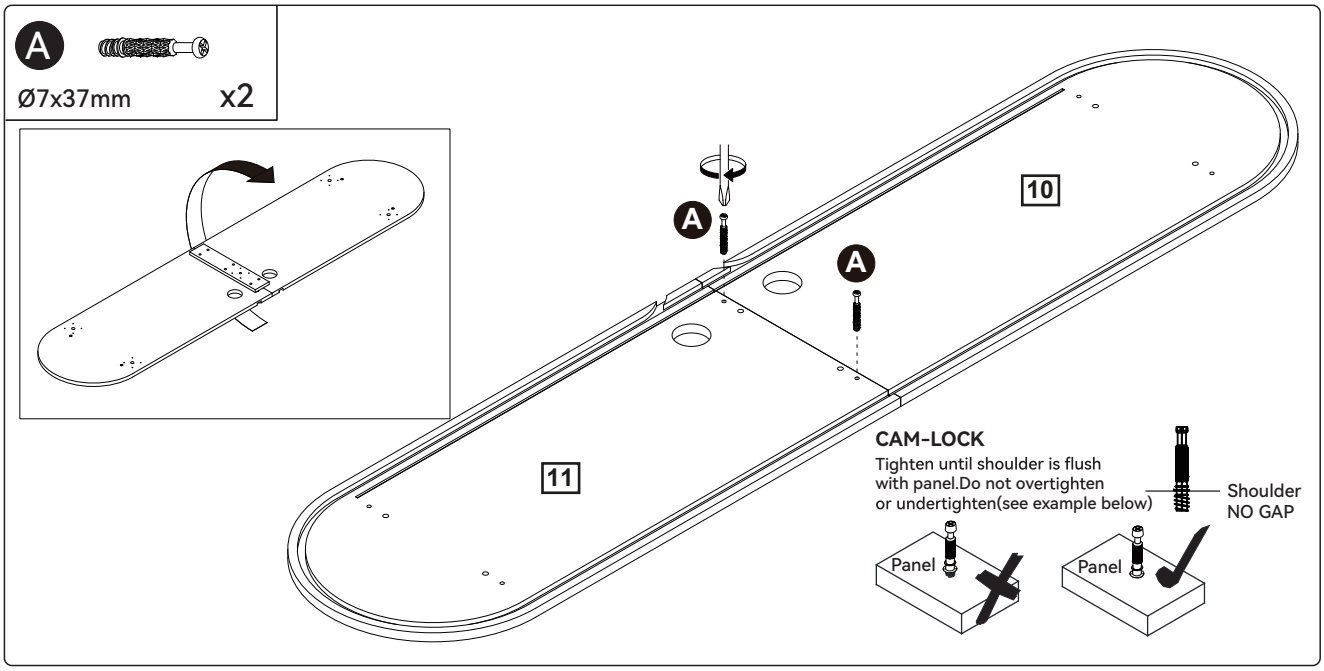

Attach cam bolt (A) to part (11) with a screwdriver.

Step 17

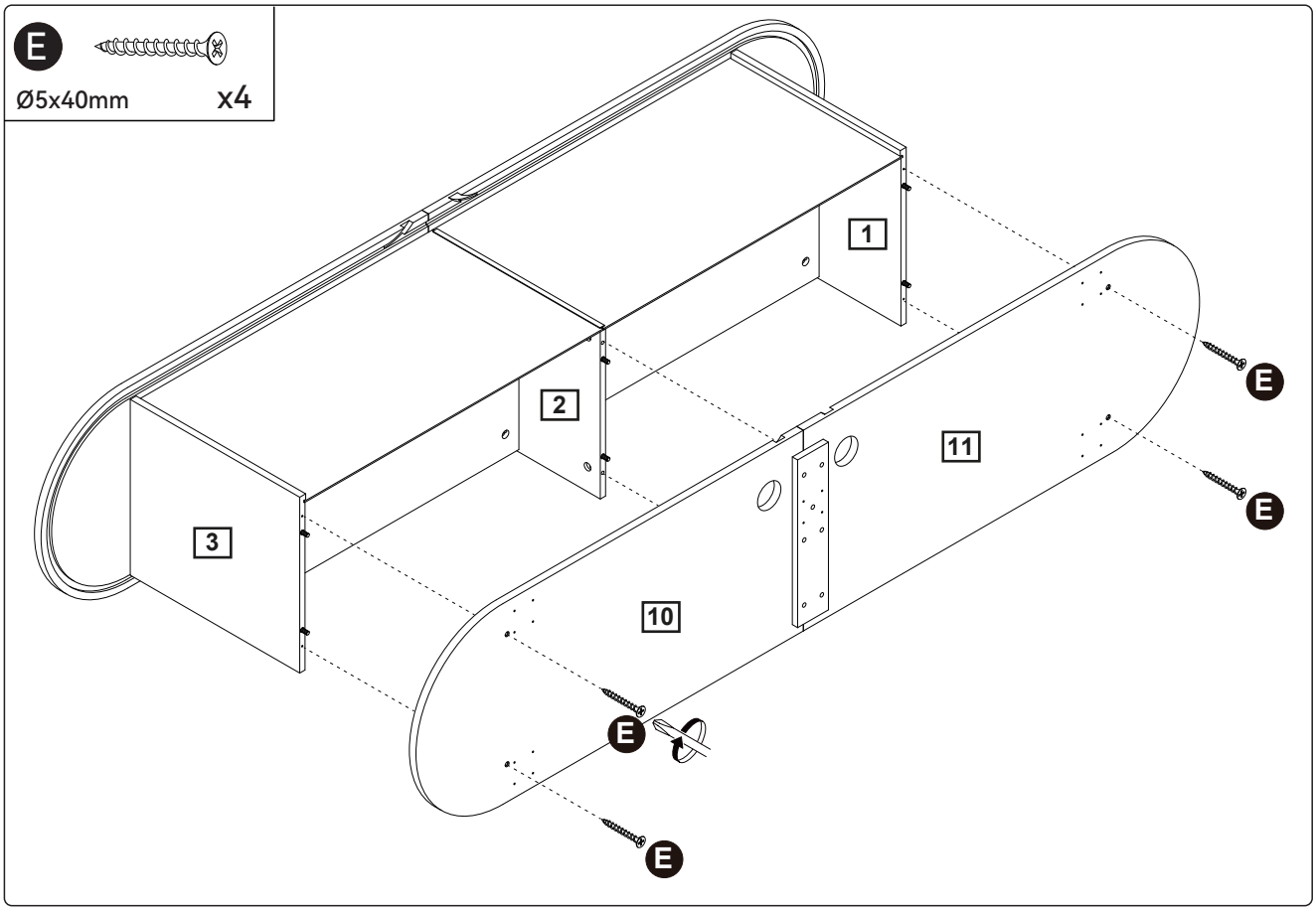

Attach part (10, 11) to part (1, 2, 3) using screw (E) with a screwdriver.

Step 18

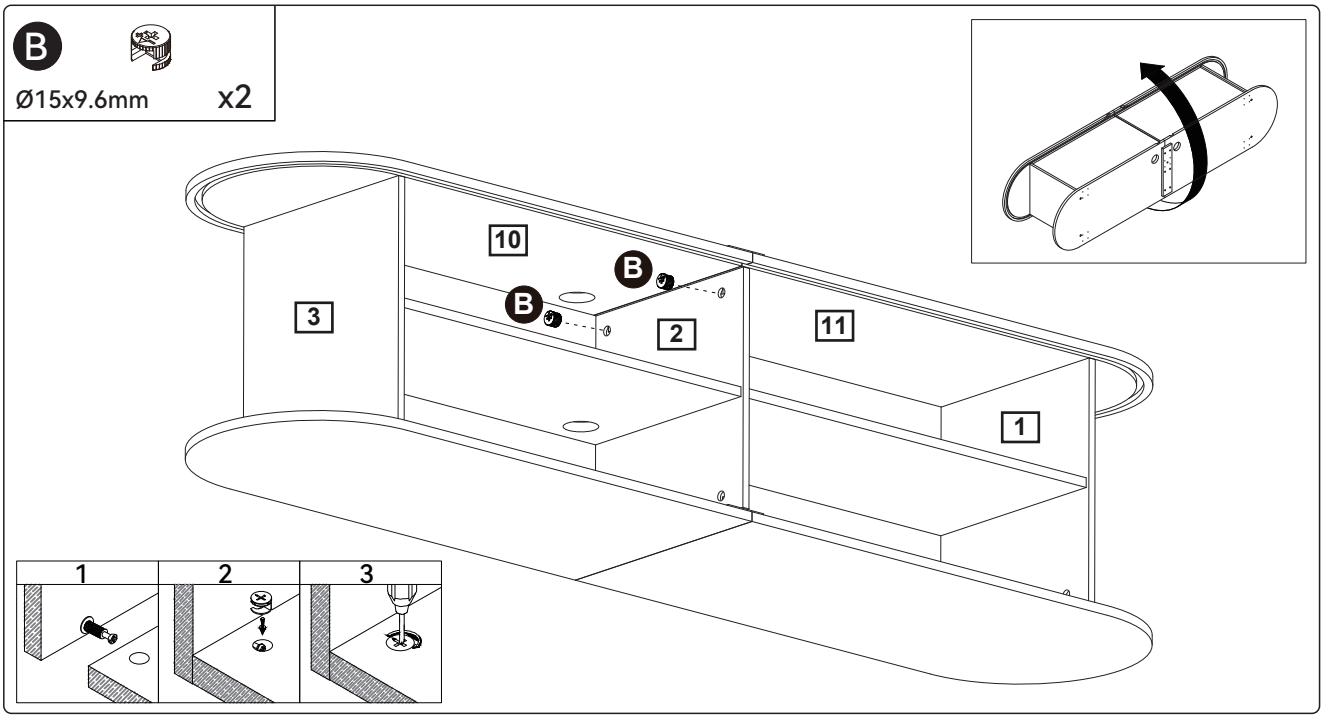

Insert and secure cam lock (B) to part (2) to lock it.

Step 19

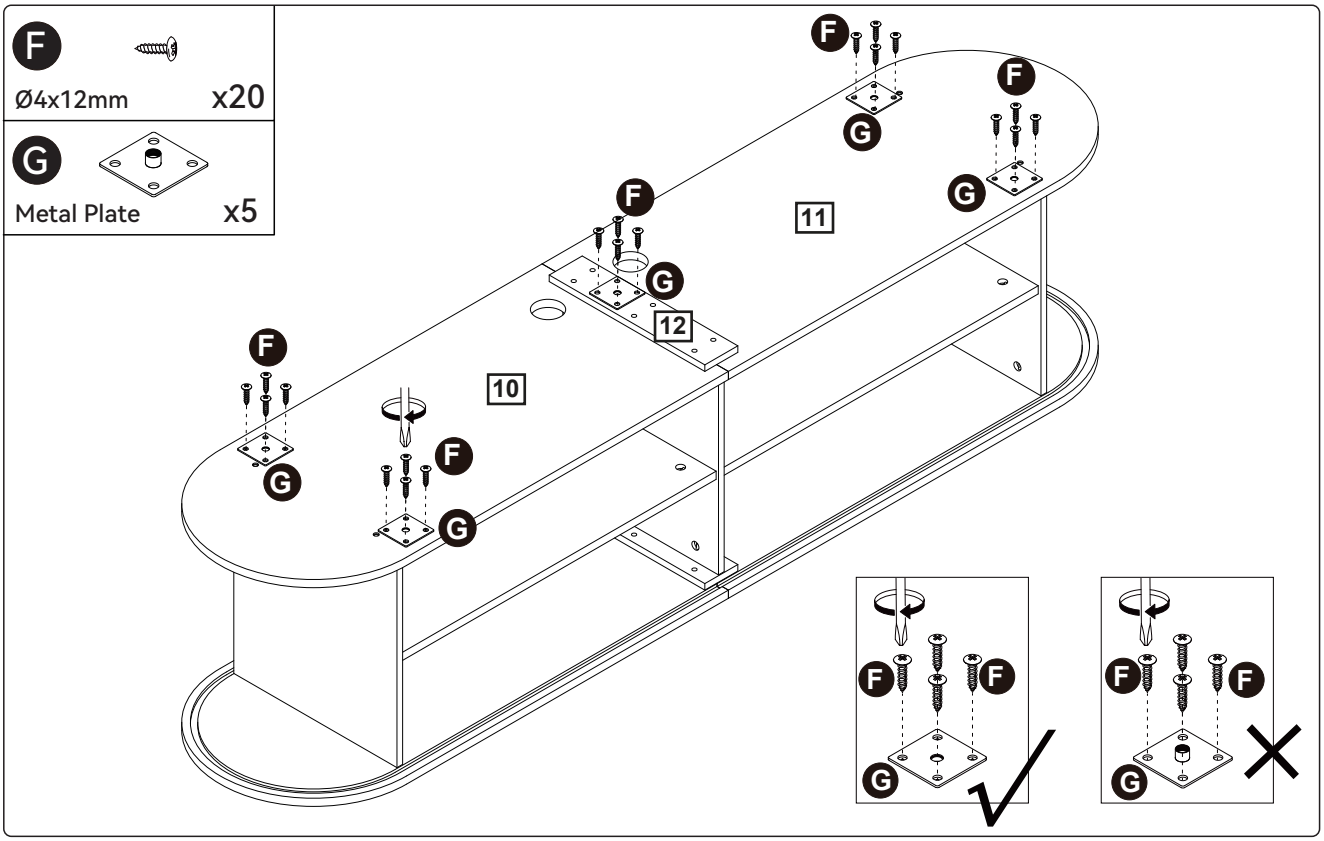

Attach metal plate (G) to part (10, 11, 12) using screw (F) with a screwdriver.

Email : **service@grandtunnel.com**

Step 20

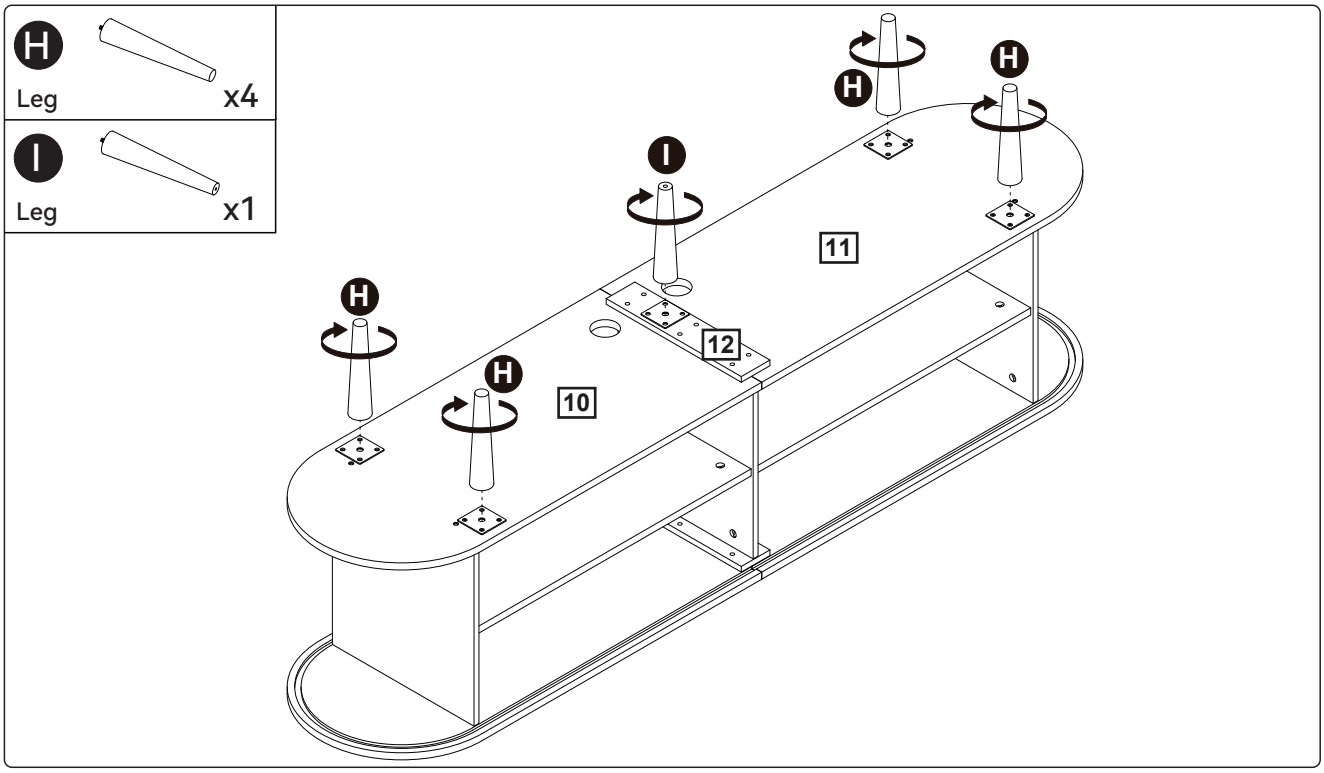

Screw the leg (H, I) into part (10, 11, 12).

Step 21

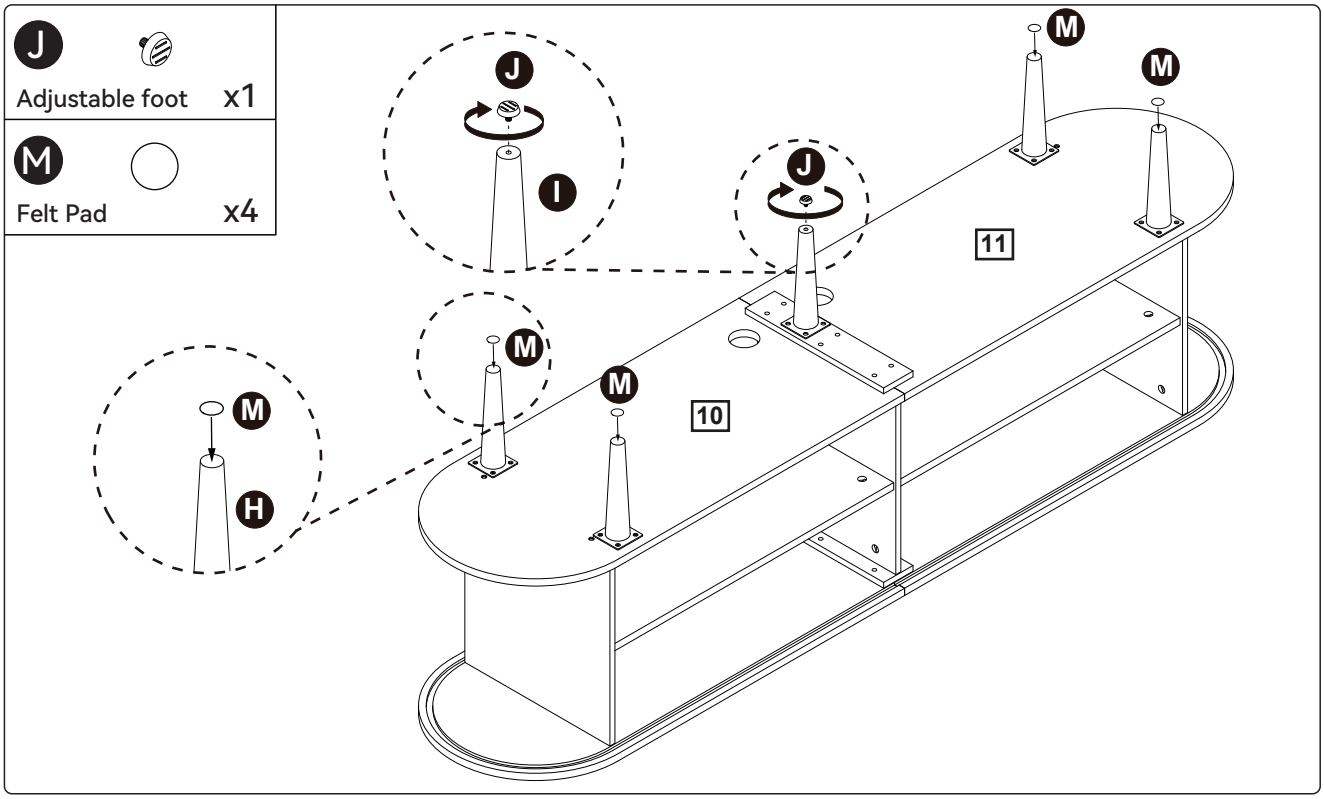

Attach felt pad (M) on the leg (H).
Screw the adjustable foot(J) into the leg (I).

Step 22

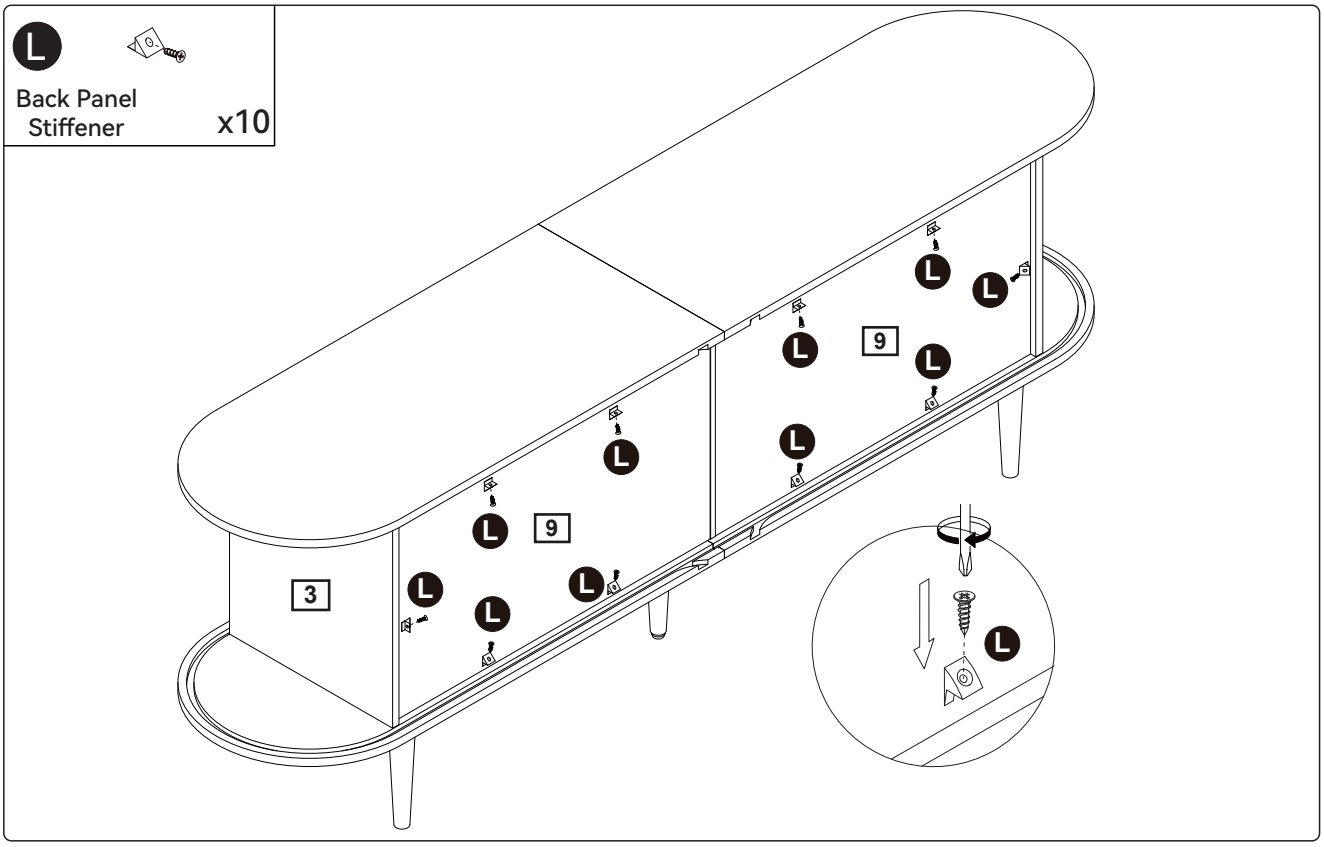

Attach plastic wedge (L) to back panel (9) using screw (L) with a screwdriver.

Step 23

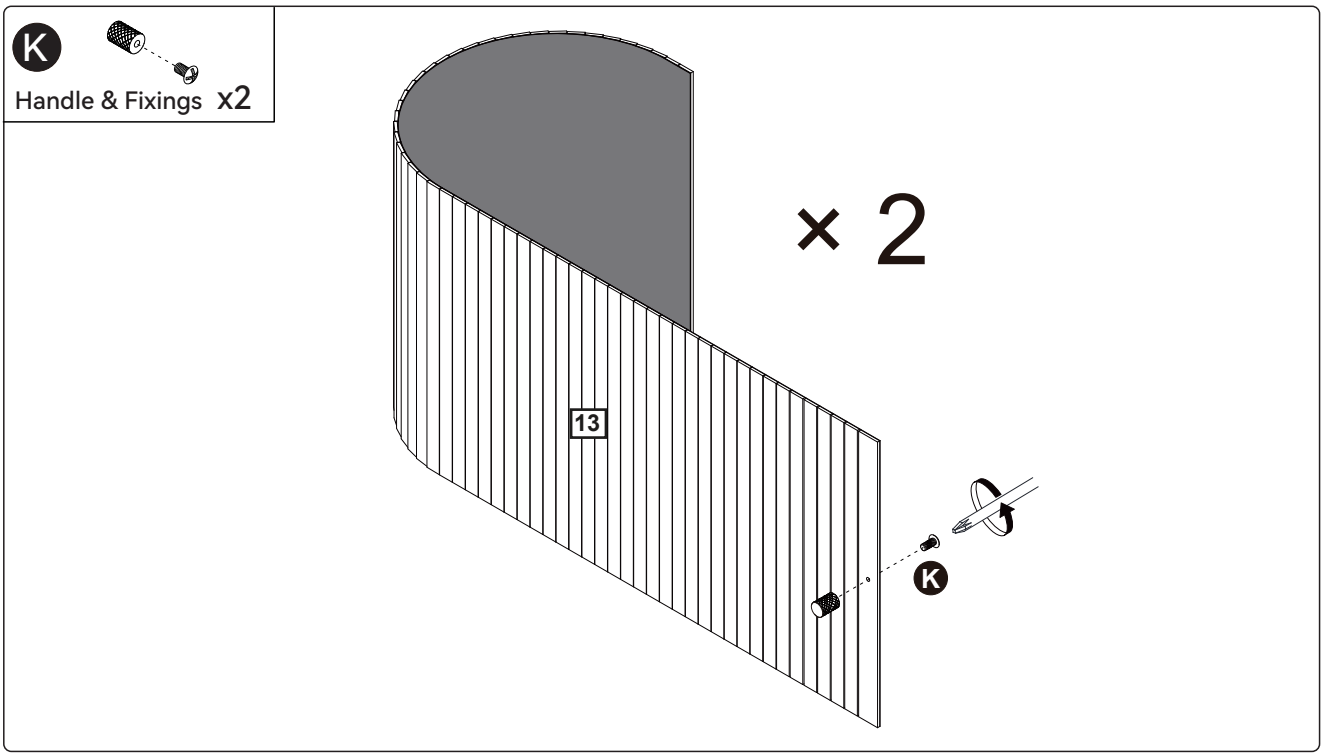

Attach handle (K) to part (13) using screw (K) with a screwdriver.

Email : **service@grandtunnel.com**

Step 24

Please pull and slide the door left and right a few times. The track will become smoother as you use it.

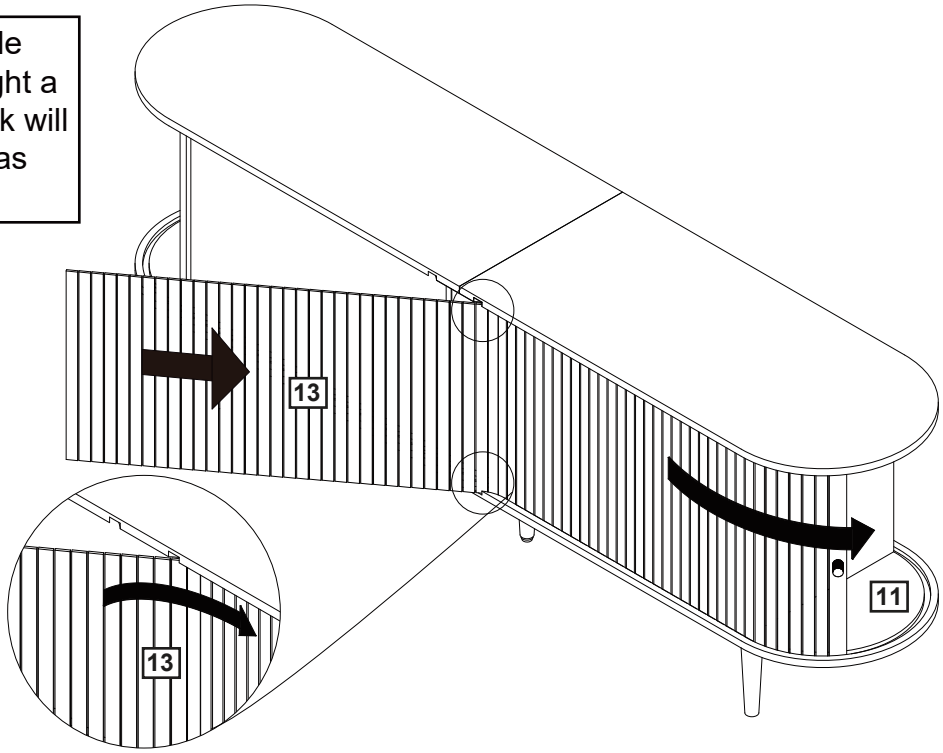

Place part (13) on the track and slide it from left to right.

Step 25

Please pull and slide the door left and right a few times. The track will become smoother as you use it.

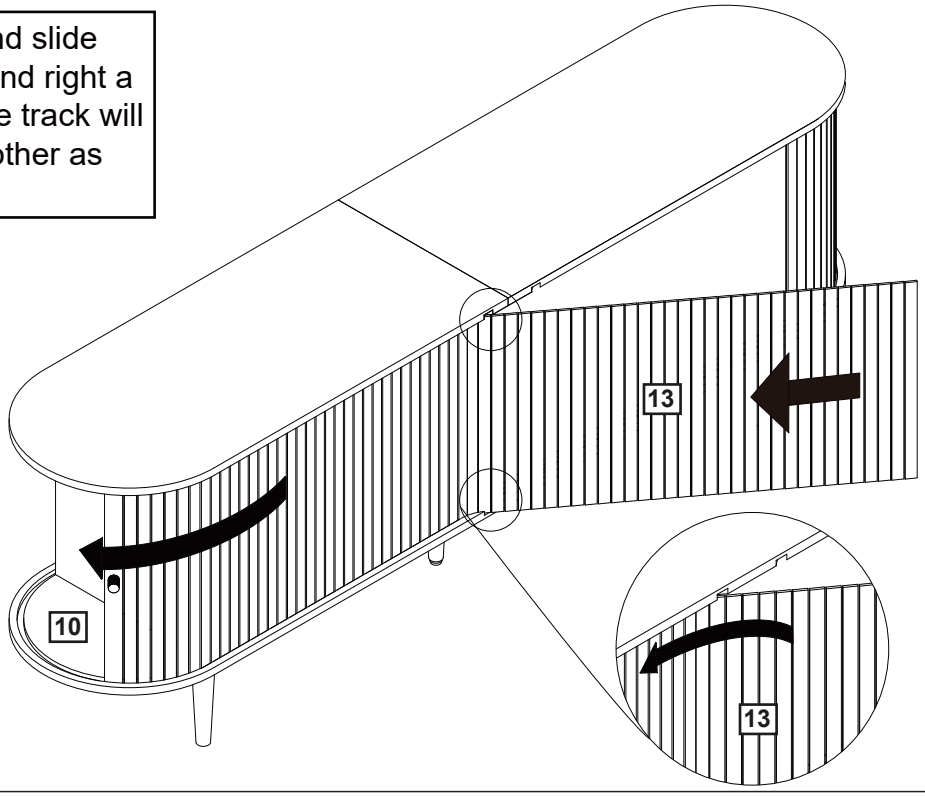

Place part (13) on the track and slide it from right to left.

Step 26

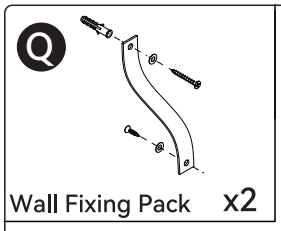

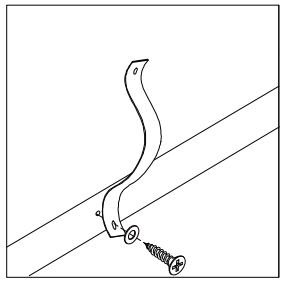

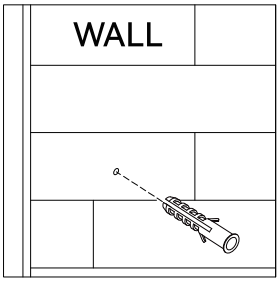

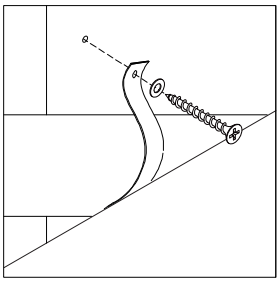

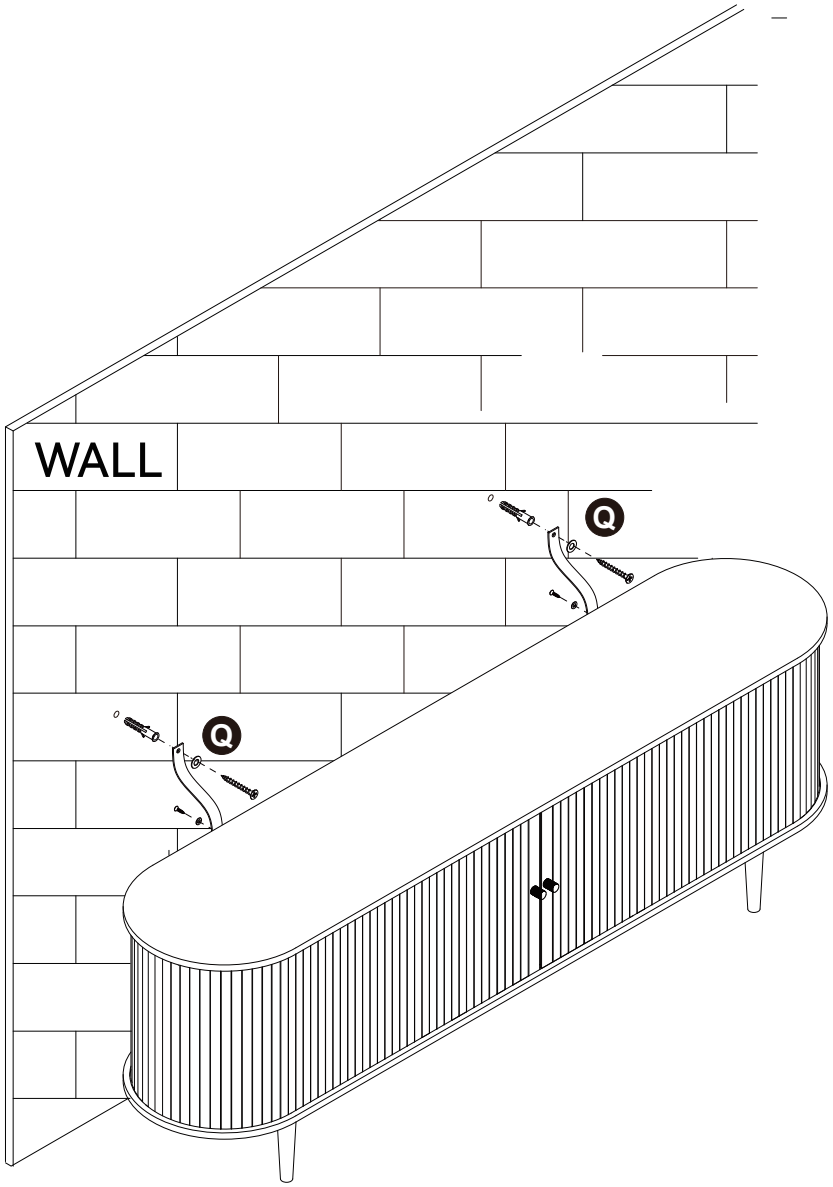

Email : **service@grandtunnel.com**

TV Stand

SKU:
BL16VB-2G0A0
BL16VB-2G0B0
BL16VB-2G0C0

V1.0