504 (541P-4D)

Installation Instruction

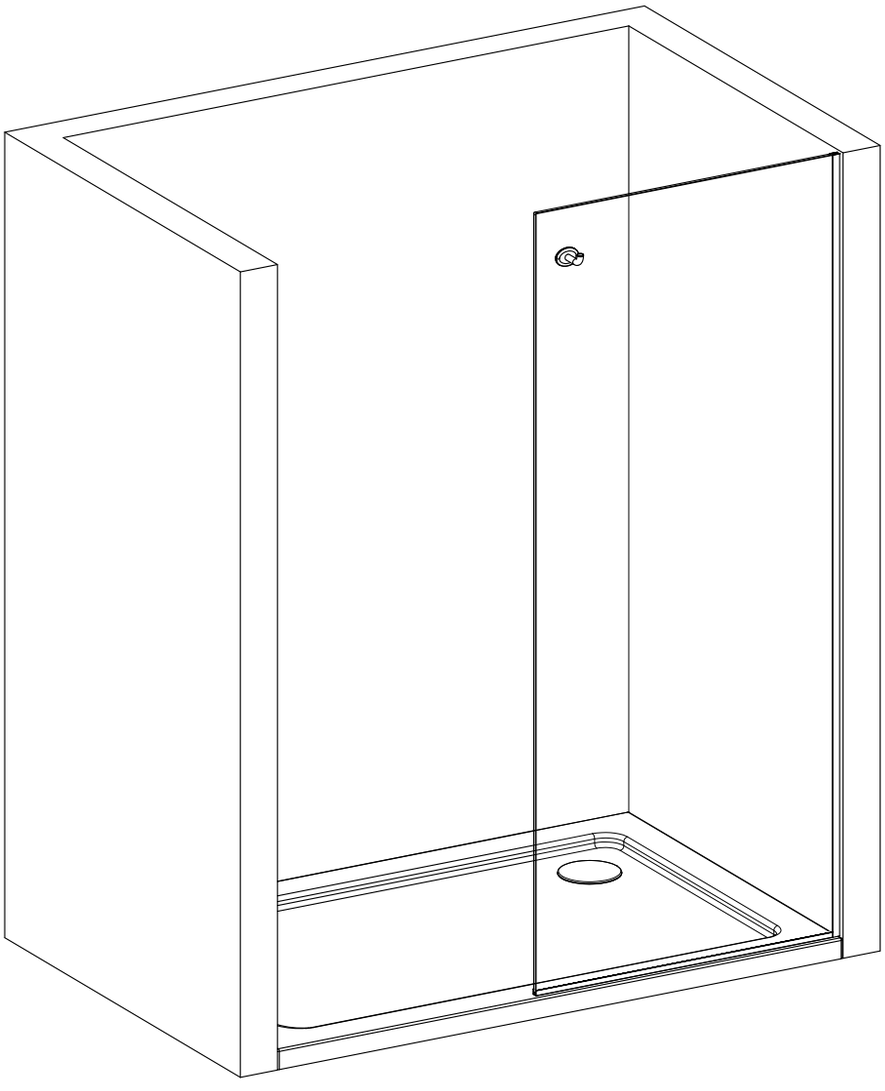



PREPARATION

1. We strongly recommend that this product be installed by a licensed and insured professional contractor.
2. After opening all boxes and packages, please read this introduction carefully. Check that all required parts are included in the package by marking all components on the Shower Door Components Detail Sheet.Inspect boxes and packages for shipping damage. If the unit has been damaged, has a finishing defect or has missing parts, please contact our customer support department within 3 business days of the delivery date. Please note that we will not replace any damaged products or missing parts free of charge after 3 business days or if the product has been installed. Feel free to contact us if you have any questions.Attention: Please double check the glass corners and four edges of glass door to ensure that all glass is in perfect condition and without any breakage. Do not attempt to install a shower door if the glass corners are broken.
3. Please note that if you are in doubt about installation compliance standards, please consult your local building codes. Building and plumbing codes may vary by location and we are not responsible for your project's code compliance standards and does not accept any returns.
4. Before installation, make sure the installation surface is leveled and solid, and can support the total weight of the unit. Also, make sure the walls are at right angles. Irregular mounting surface levels or improper angle of side walls will cause serious problems during installation.Note that some adjustments and drilling may be required during installation.
5. Protect all major surfaces of the product during installation. Never place glasses directly on tile floors. Leave the corner protector in place until it needs to be removed. Always use a piece of wood or cardboard to protect the bottom edges and corners of the glass before and during installation.

IMPORTANT - Please read and follow all warnings and instructions before using this product. Injury can result from improper use.Save this documents.

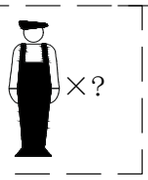

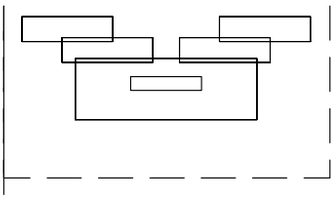

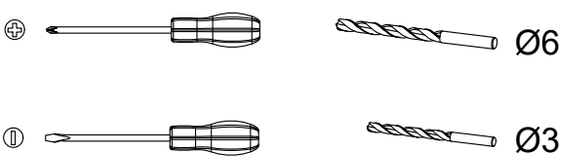

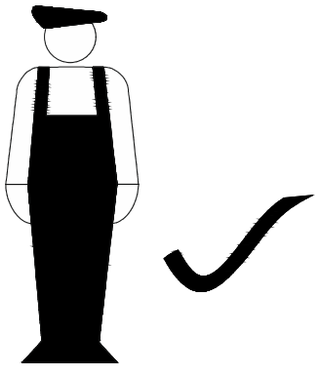

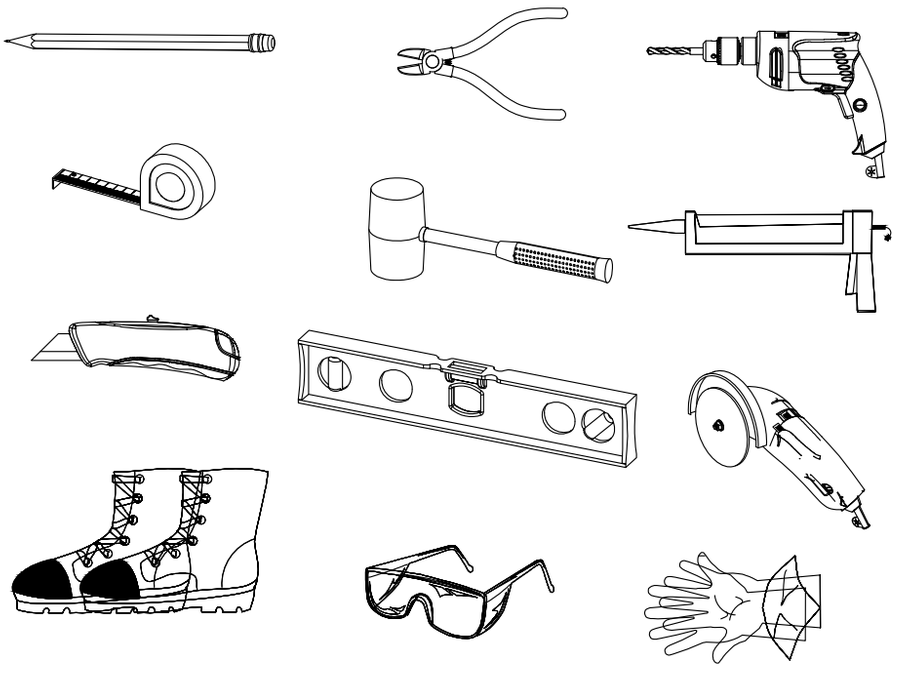

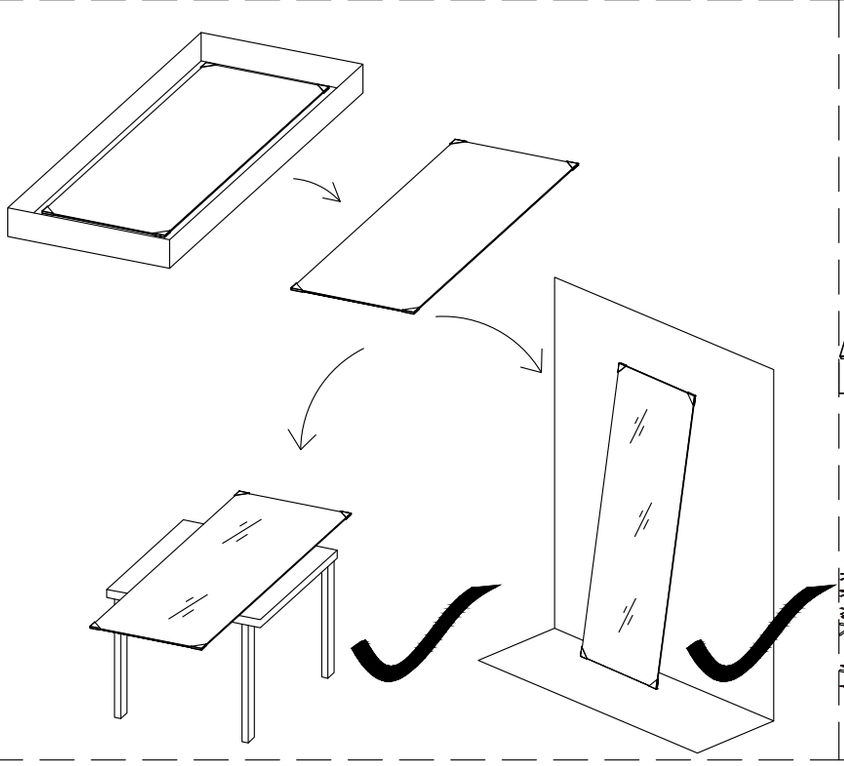

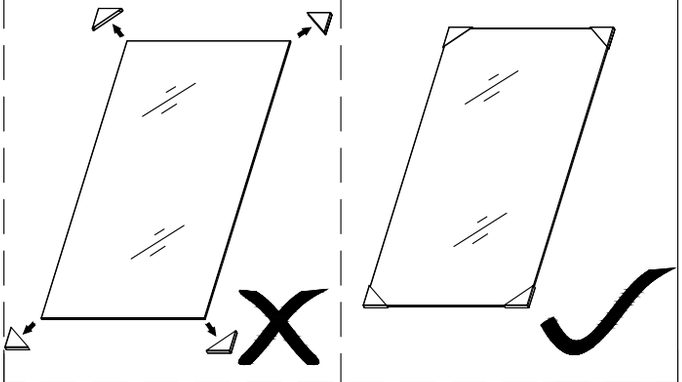

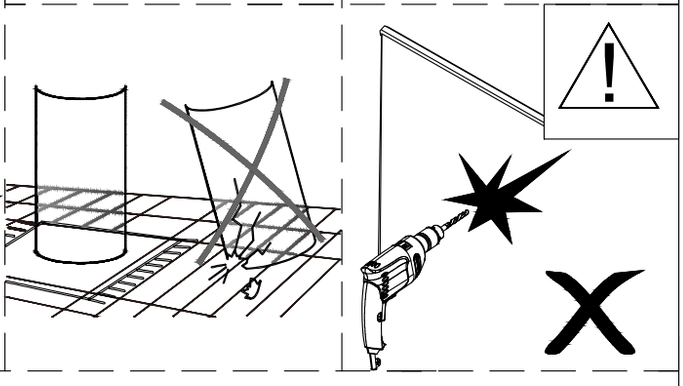

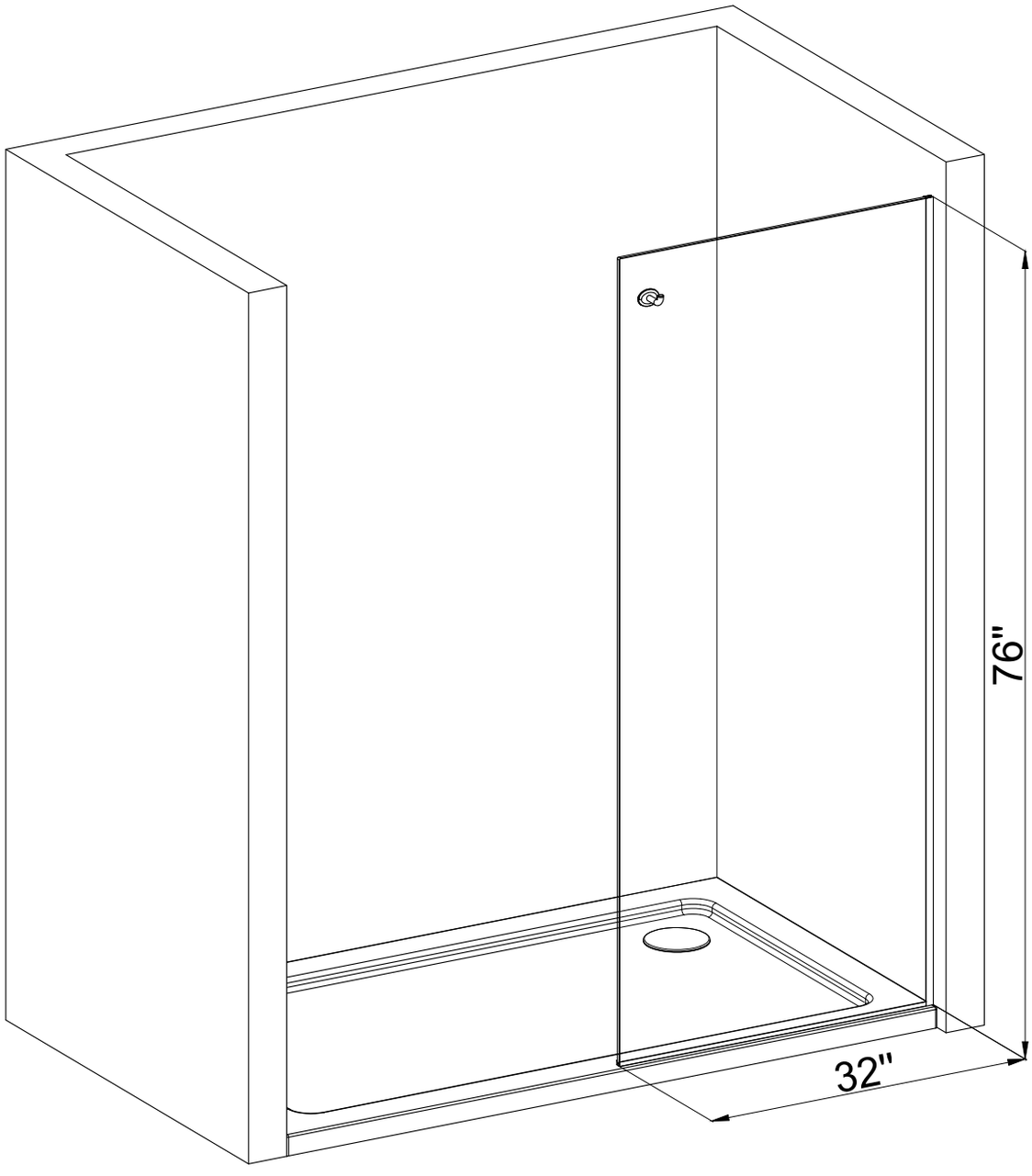
76"
32"

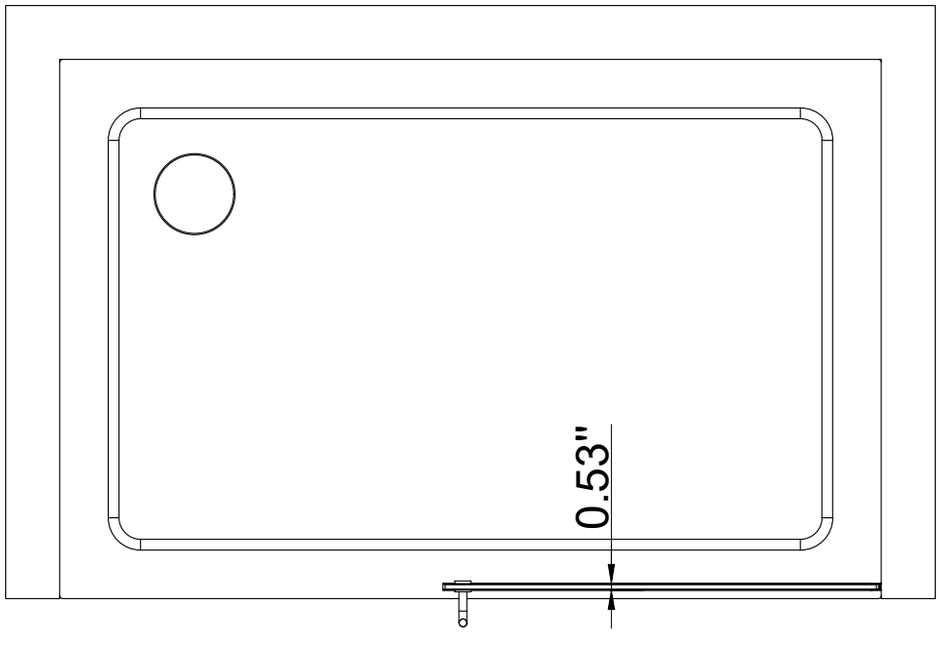
0.53"

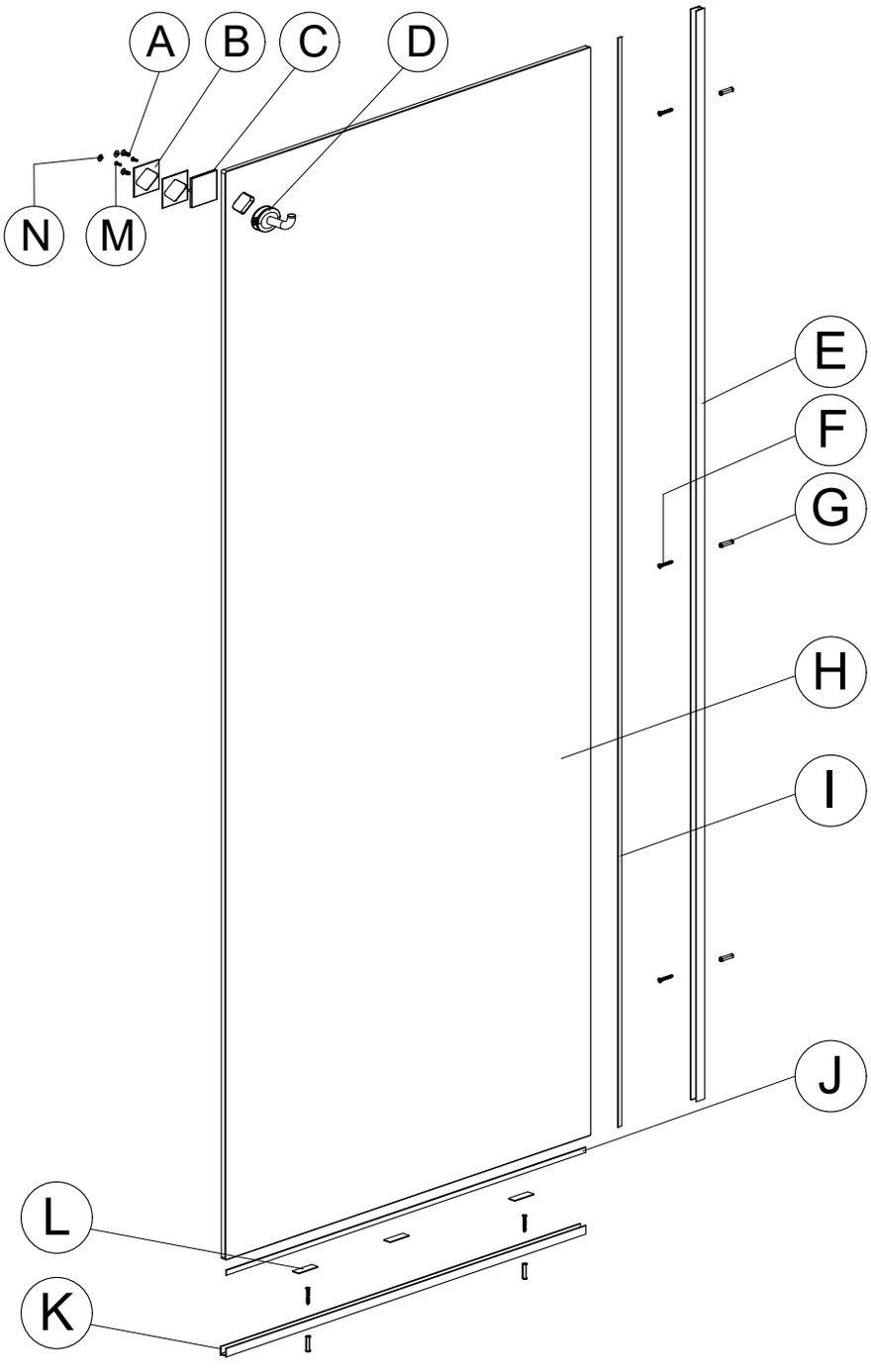



A	×2 M6×25	B	×2	C	×1	D	×1	E	×1
F	×5 ST4×30	G	×5	H	×1	I	×1	J	×1
K	×1	L	×3	M	×2 M4×18	N	×1	O	×4 M5×6
P	×2 Ø4.2	Q	×2 M5	4		R	×1 4mm	S	×1 2.5mm

1

Keep the frame vertical, mark holes, drill holes, install the expansion tubes, and secure the frame with screws.

E ×1

K ×1

F ×5
ST4×30

G ×5

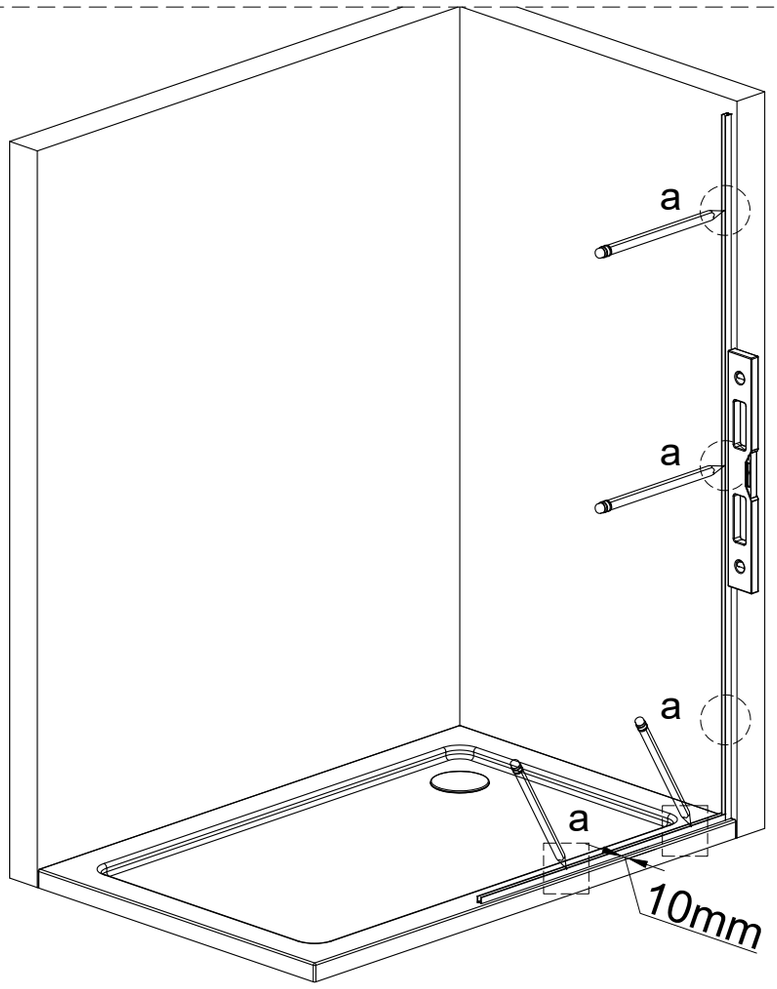

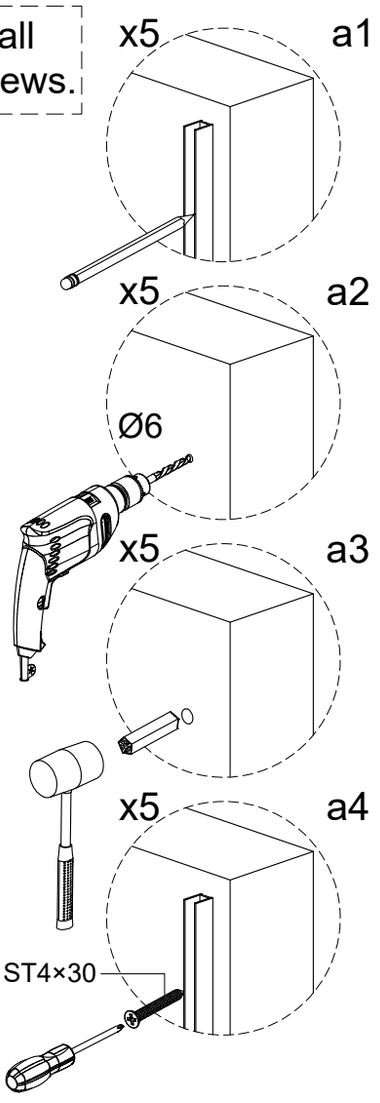

2

Install fixed glass.

H ×1

L ×3

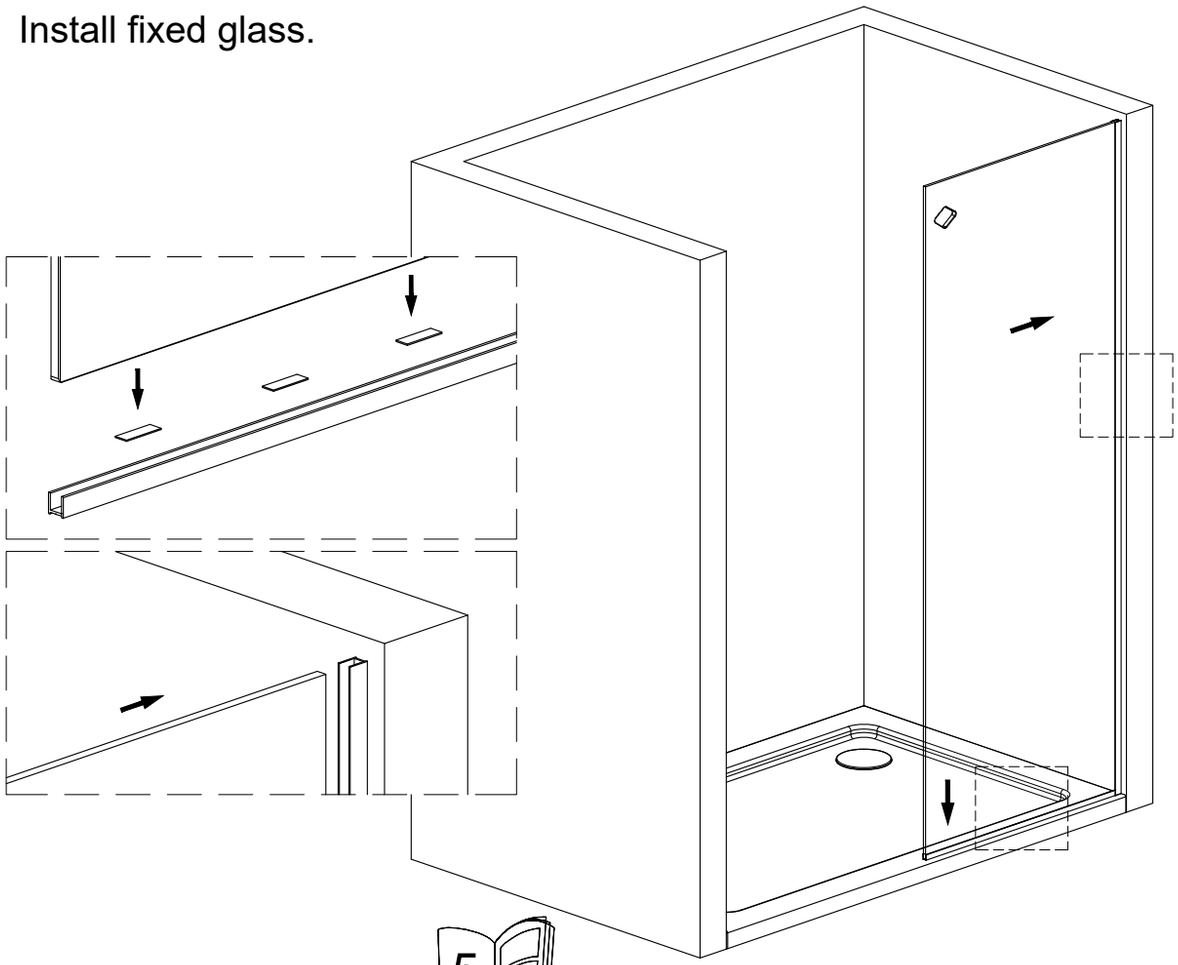

3

Install the sealing strip.

I	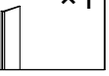	×1
J	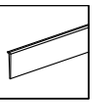	×1

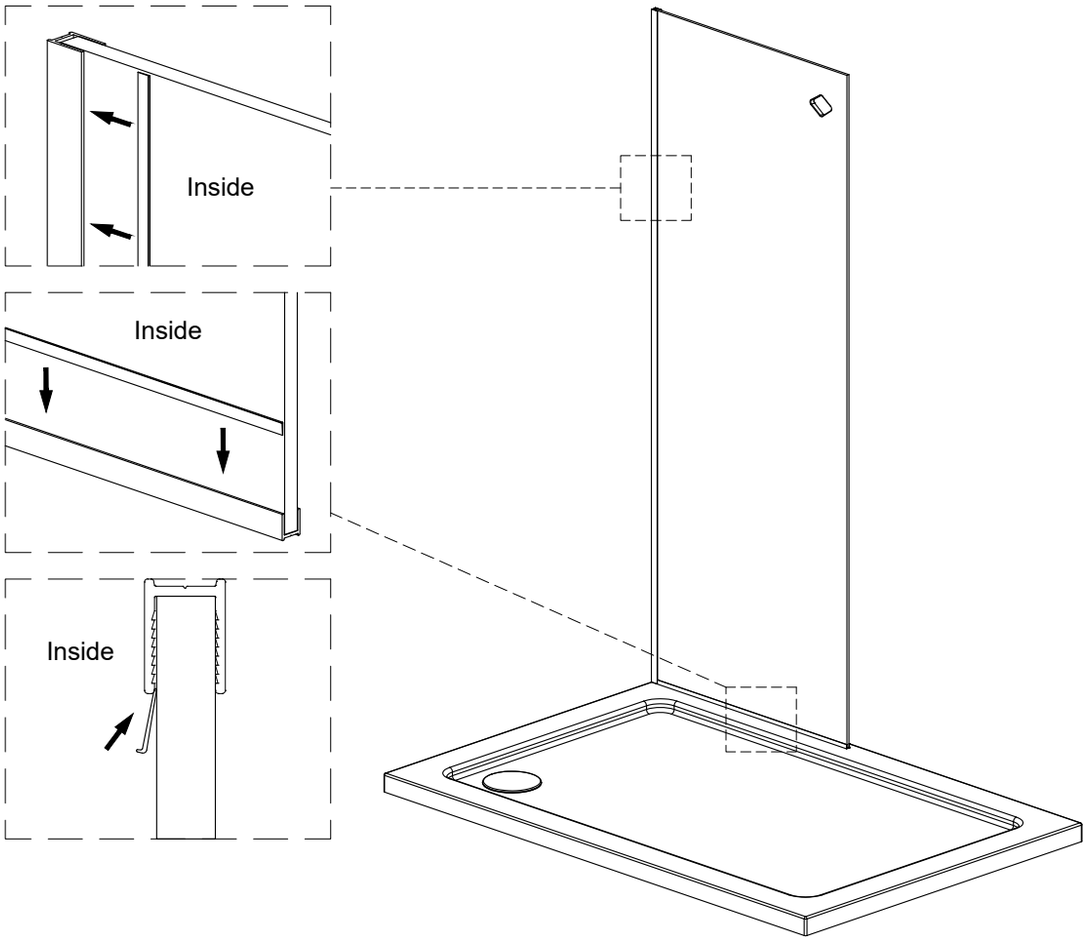

4

Install the hook.

D		×1
M	 2mm	×1
N	 2mm	×1

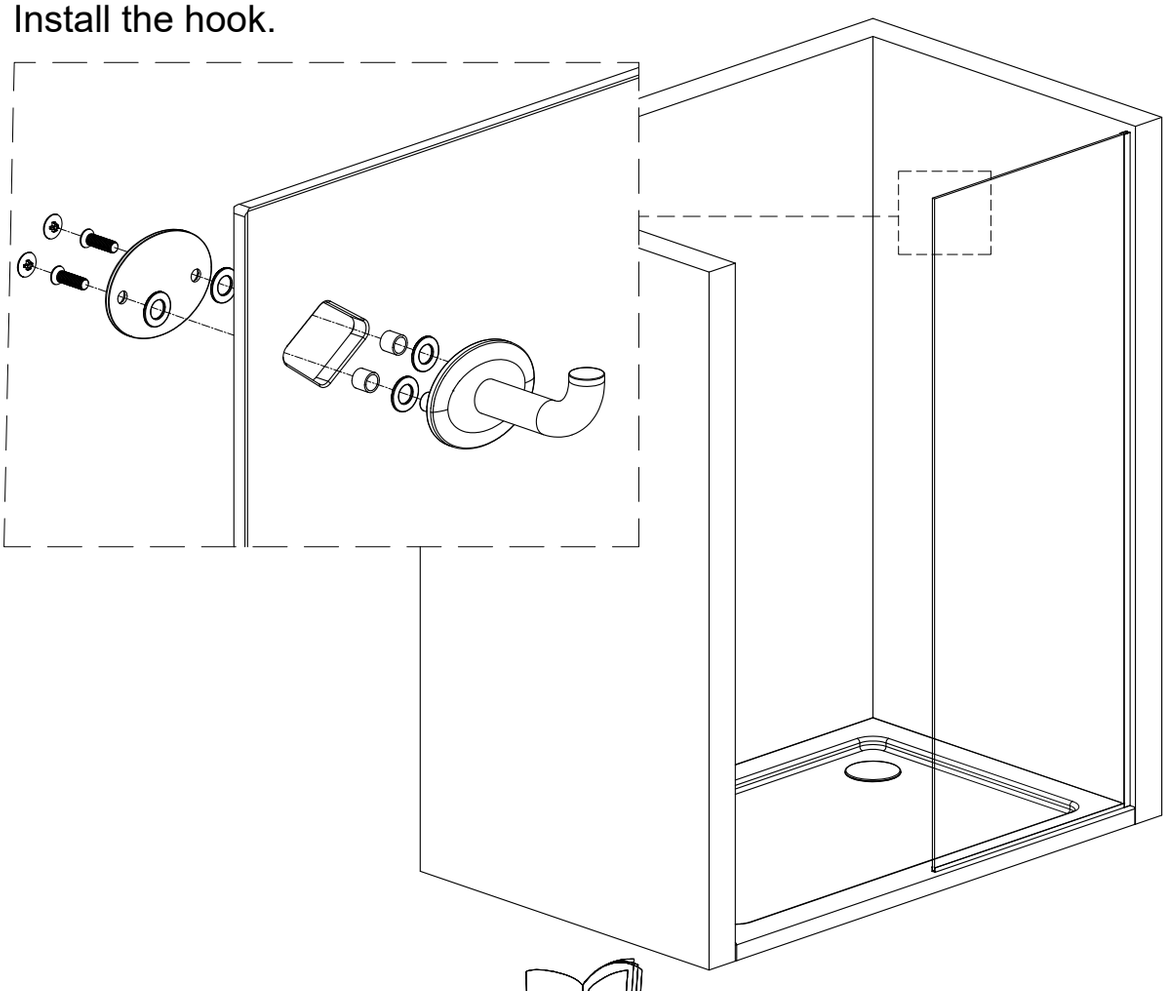

5 Apply silicone sealant.

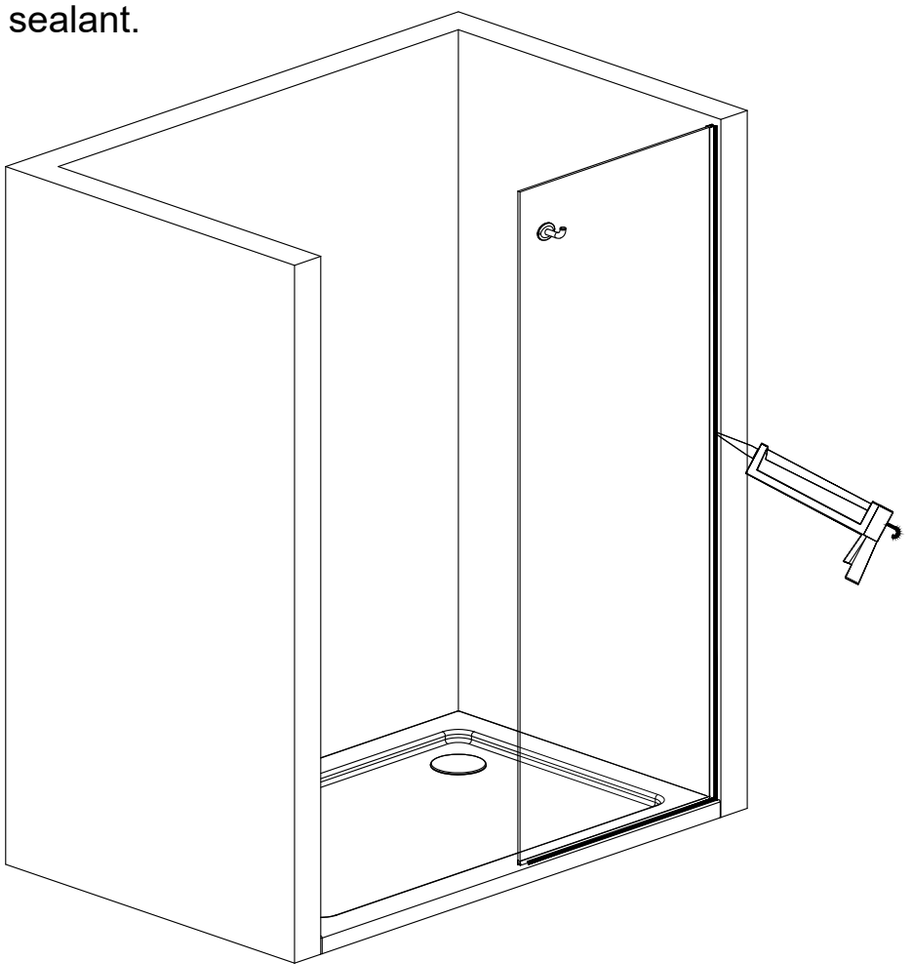

6 Apply silicone sealant.



MUST ALLOW SILICONE TO DRY FOR 24 HOURS BEFORE USING THE SHOWER.

