Read this instruction carefully. Refer hardware and furniture parts list for guidance. Be sure all parts are complete before assembling. Place all wooden furniture part on a clean and flat soft surface to prevent scratches. Refer steps provided as assembling guide.

PART LIST		
ITEM	DESCRIPTION	QTY
A	Backrest	1 PC
B	Front Leg	2 PCS
C	Box Seat	1 PC
D	Cushion	1 PC

HARDWARE LIST		
ITEM	DESCRIPTION	QTY
1	JCBC Screw M6 x 80mm	4 PCS
2	JCBC Screw M6 x 60mm	4 PCS
3	JCBC Screw M6 x 35mm	1 PCS
4	Spring Washer M6 x 13mm	9 PCS
5	Flat Washer M7 x 19mm	9 PCS
6	Allen Key M4 x 55mm	1 PC
7	CSK Screw M4 x 30mm	3 PCS

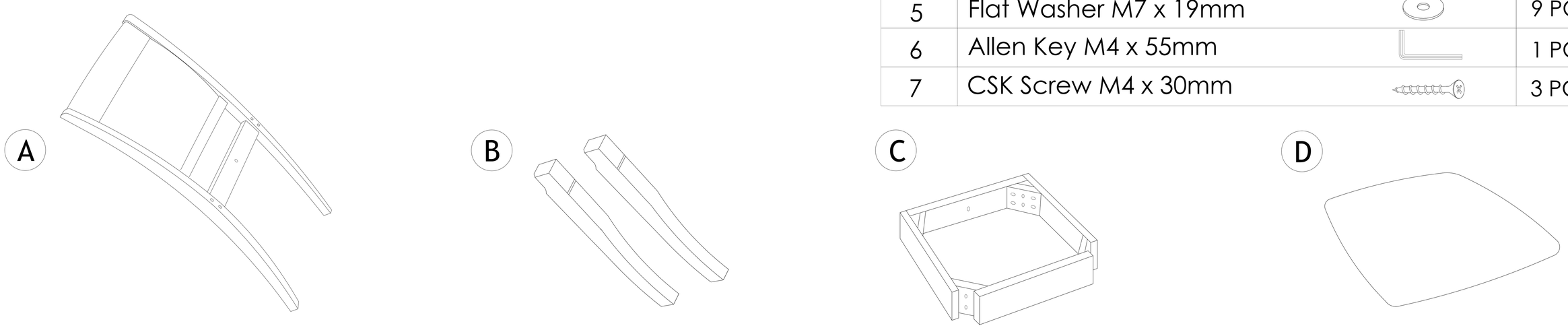

STEP 1

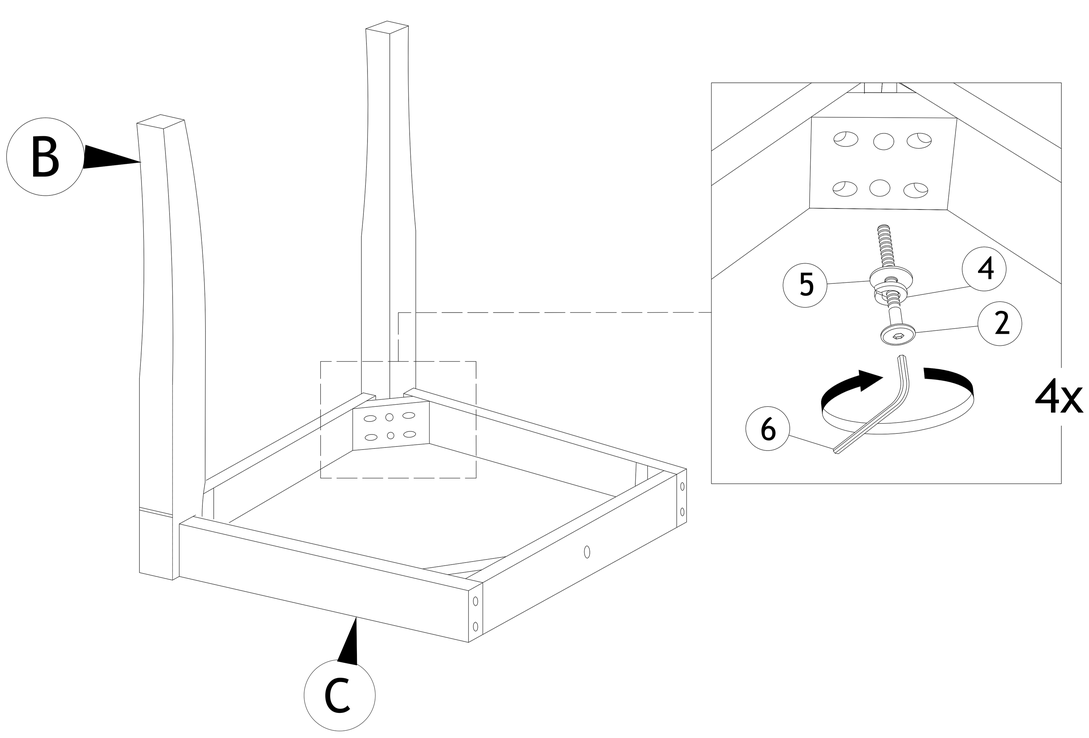

STEP 2

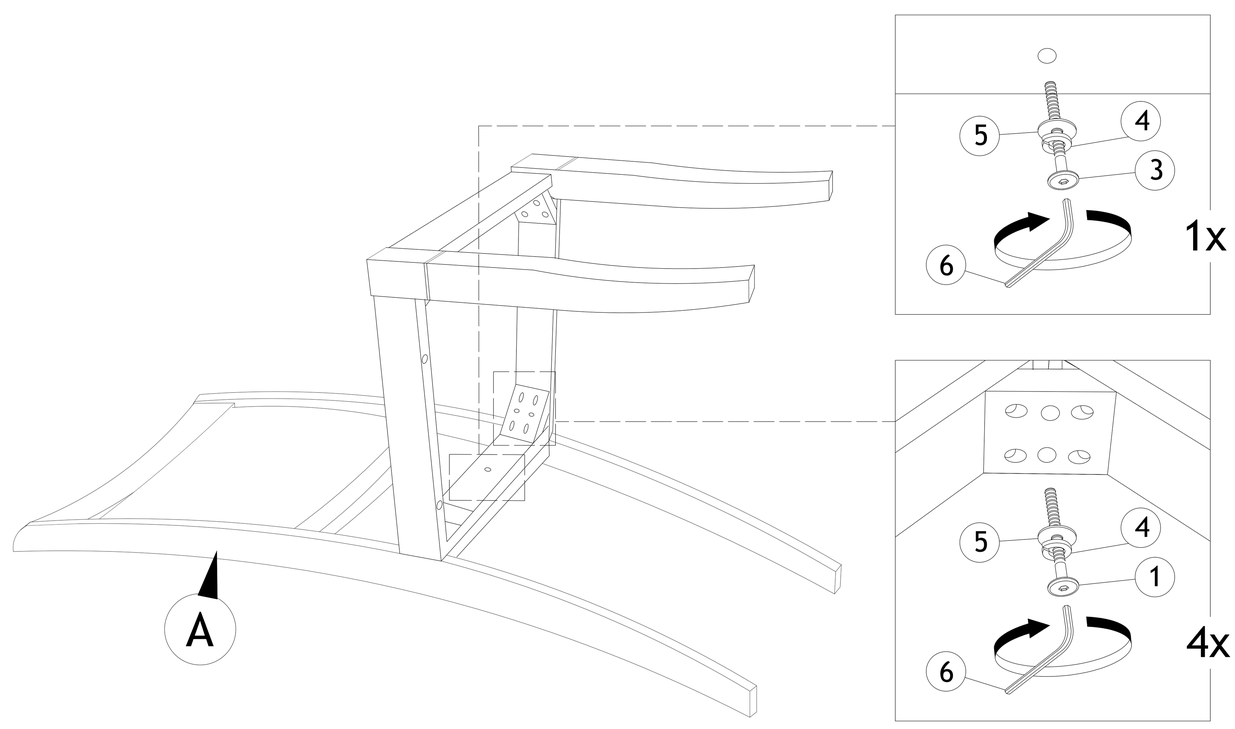

STEP 3

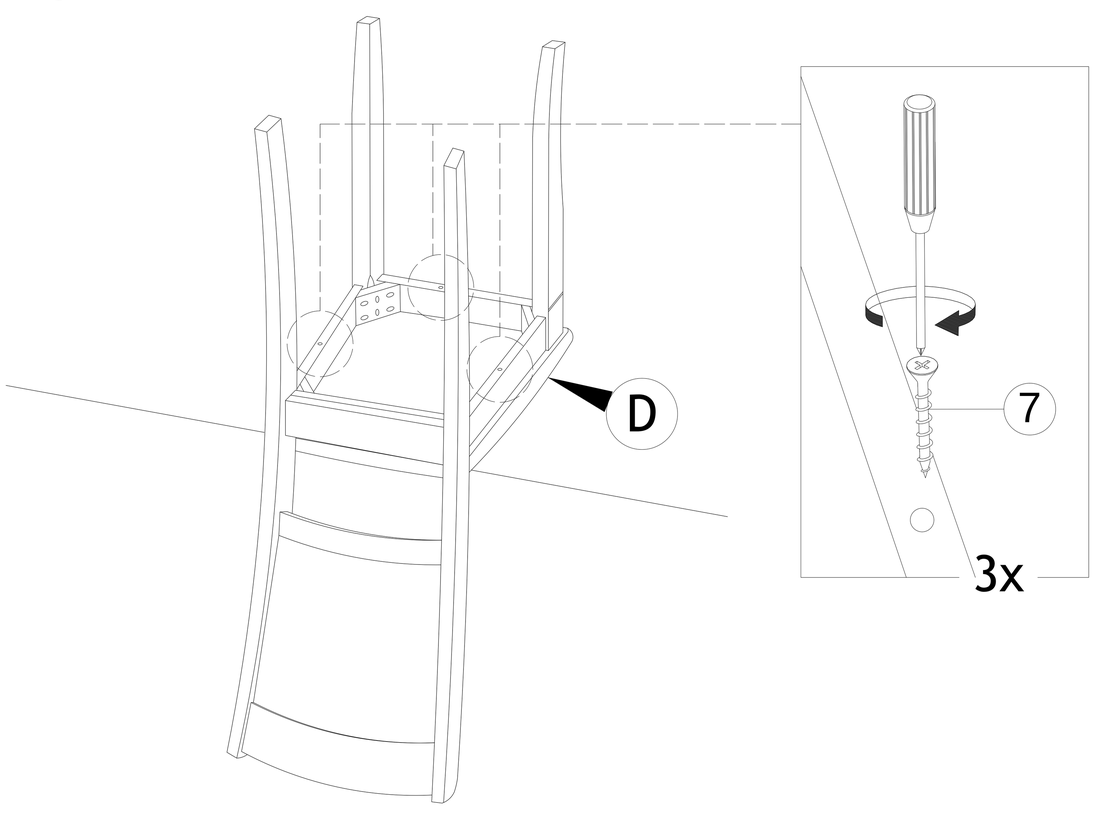

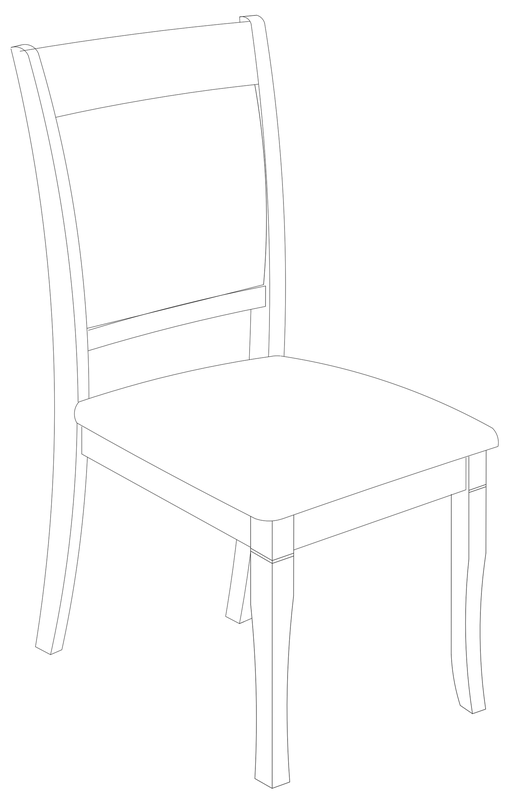

COMPLETED ASSEMBLY