# LV C2218

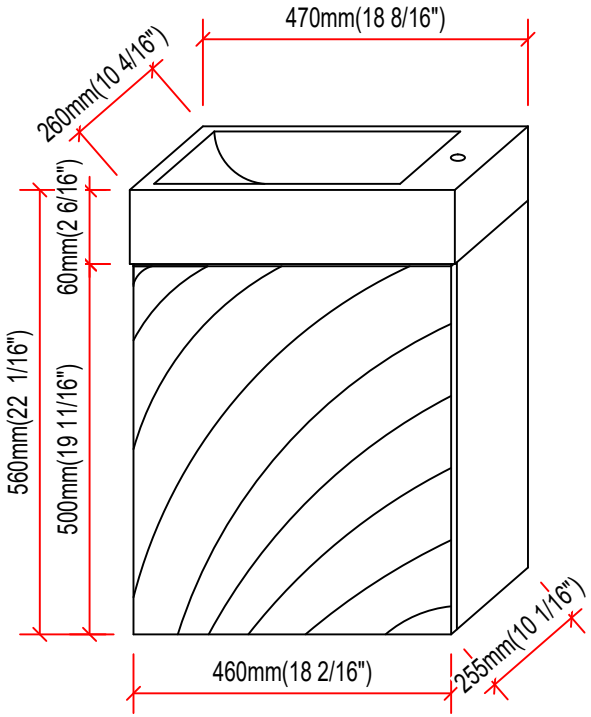


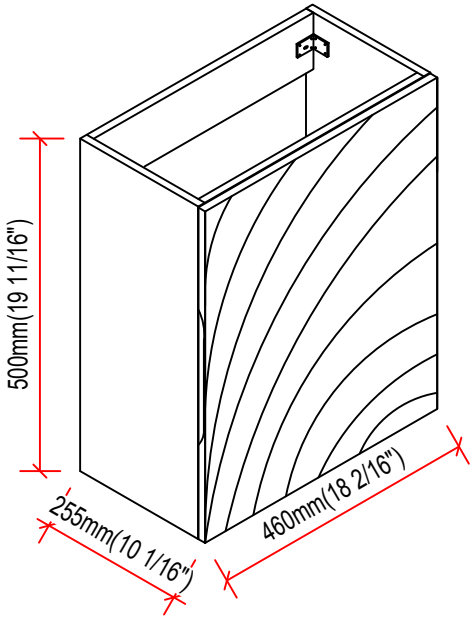


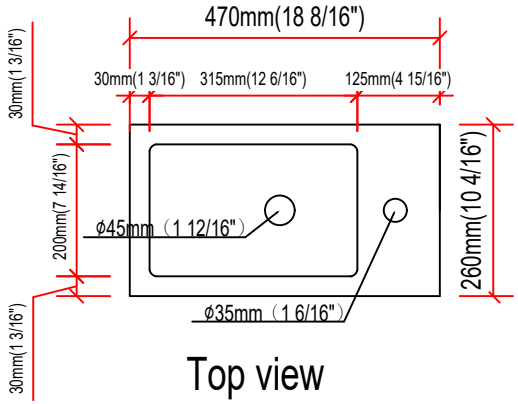


Top view

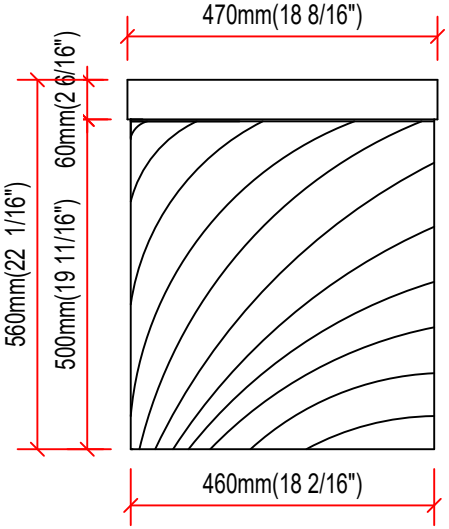


Front view

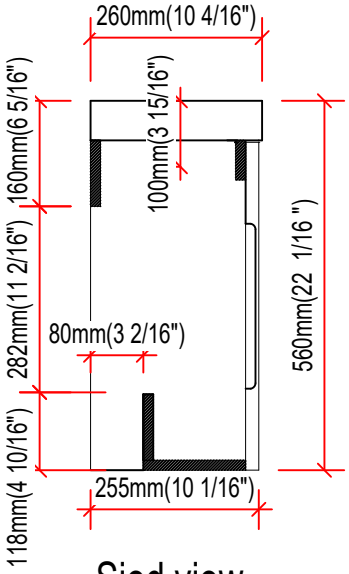


Sied view