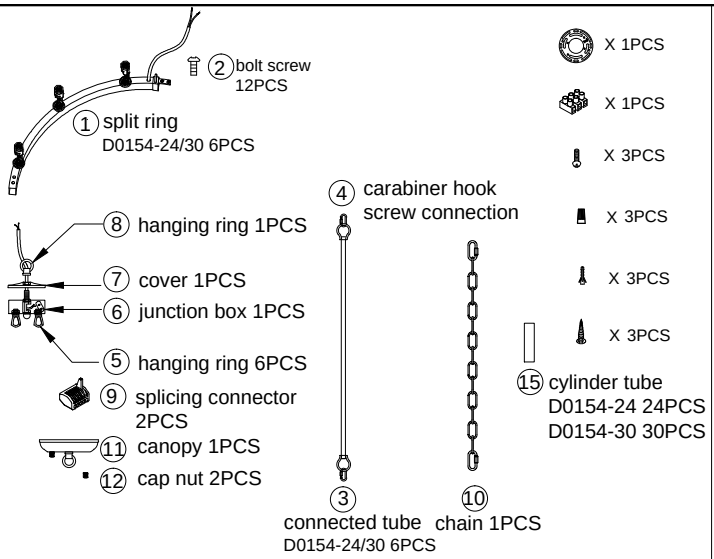

Note: male Ⓐ should connect with female Ⓐ,
male Ⓑ should connect with female Ⓑ
(Ⓒ with Ⓒ, Ⓓ with Ⓓ).

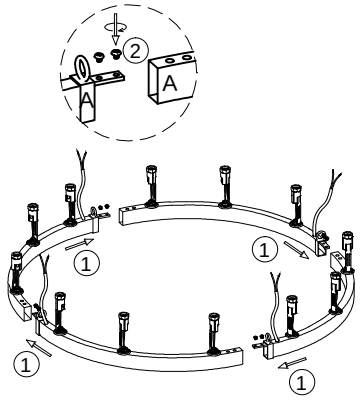

1.Assembled the split parts ① to a completely ring fixture like picture showed, pushed the split parts and fix with bolt screw ②.

Note: the ring should be hanged by the tubes ③, not the wires, so please keep the wires loosen when make connection !

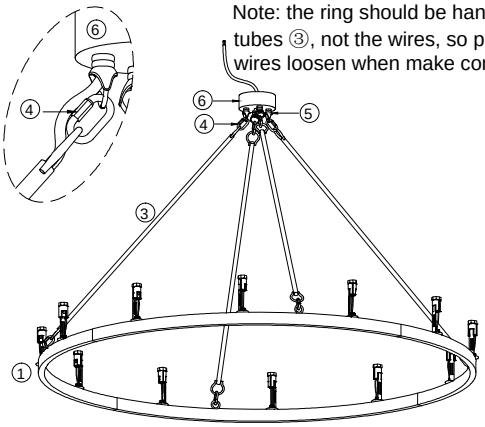

2.Let the wire go through the connected tube ③, hang the ring ① to the junction box ⑥ with carabiner hook screw connection ④, let the wire go through the junction box ⑥.

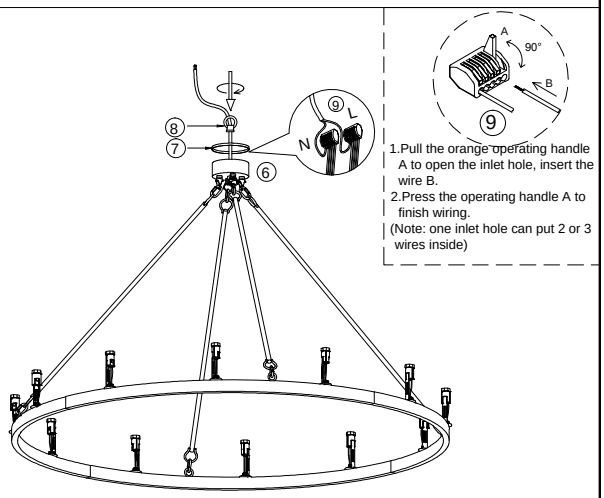

3.Connect all the wires by parallel with splicing connector ⑨ (all live line-L use one connector, and neutral Line-N use another connector).
4.Let the wire go through the cover ⑦ and hanging ring ⑧, rotate ring ⑧ to fix the cover ⑦ to the junction box ⑥.

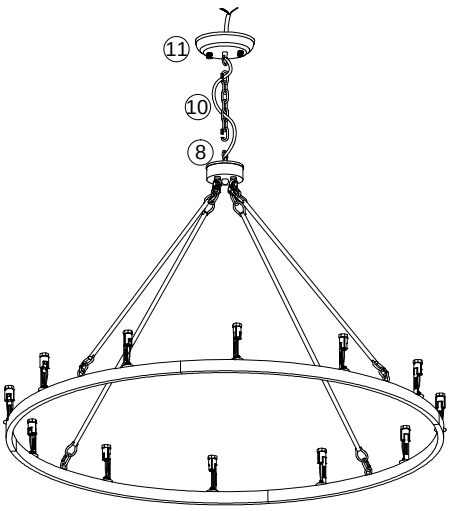

5.Connect the canopy ⑪ and the light fixture ⑧ with chain ⑩.

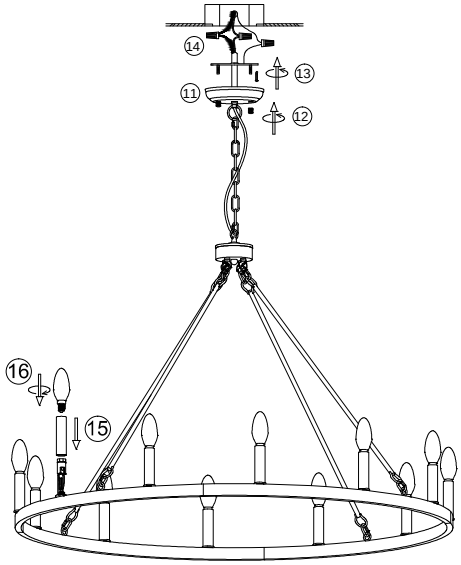

6.Install the bracket to the ceiling junction box with screw ⑬.
7.Connect the wire to your home line with cap connectors ⑭.
8.Install the fixture to the bracket with cap nuts ⑫.
9.Put the cylinder tube ⑮ on top of bulbholder and install the bulb⑯.

Please read carefully before installation!!!
Note : Please make sure that the electricity is powered off during installation !
Only a professional electrician should install this kind of product !