TERRAlife™

Puget

PRODUCT CODE: TDR 1818 GWS
DUAL MOUNT, SINGLE BOWL
FIRECLAY KITCHEN BAR SINK

STANDARD COLOR:
GLOSSY WHITE

FEATURES

- Fine fireclay construction (solid wall)
- Sink has a fully finished/glazed lip for undermount or drop-in installation
- 3-1/2” offset drain (spin to desired placement)
- Stainless steel sink rack and chrome strainer included
- Garbage disposal compatible with standard flanges; extenders not required
- Requires support frame in cabinetry
- Requires a minimum 21 inch wide base cabinet

DIMENSIONS:

NOMINAL DIMENSIONS (OUTSIDE)
18” on center x 9” tall

INSIDE BOWL DIMENSIONS
15.5” round
7.875” depth

COMPONENTS INCLUDED THE BOX: Sink, strainer, sink rack.

COMPLIANCE CERTIFICATIONS: Meets or Exceeds ASME A112.19.2 / CSA B45.1

COMPATIBLE ACCESSORIES: Stainless Steel Sink Grid TSR1819GSS (included)
Stainless Steel Sink Kitchen Strainer TLST (included)

DIMENSIONS

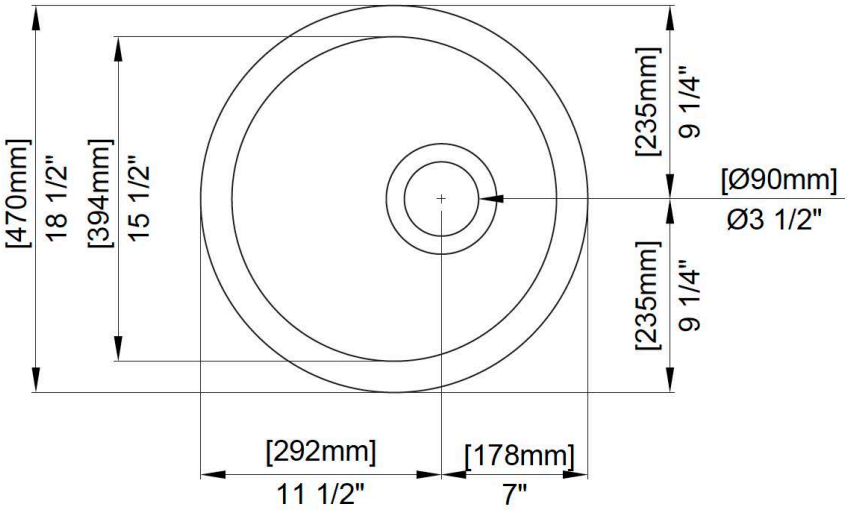

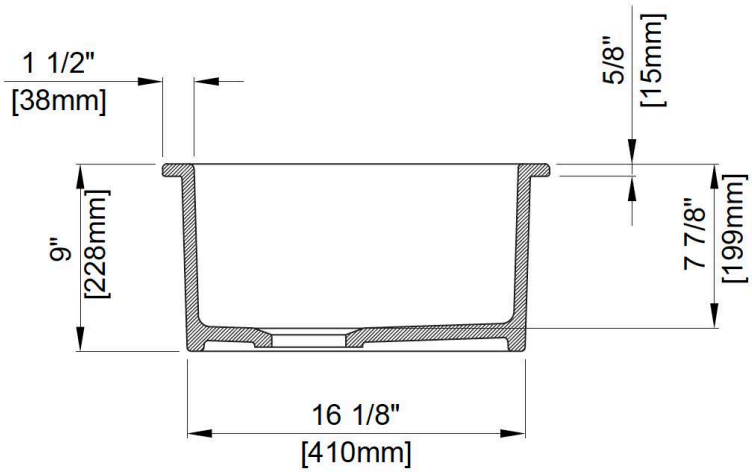

NOTES:

Refer to installation instructions supplied with kitchen sink for undermount, countertop or above counter custom installations.

Due to the fireclay process, dimensions may vary.
Please use the actual sink that you will be installing in order to determine the cutout dimensions for your countertop.

CAUTION: Sink is heavy! Installer must provide adequate reinforcement for all load-bearing supports in accordance with installation instructions supplied with kitchen sink. Fittings not included with fixture and must be ordered separately.

IMPORTANT: Dimensions of fixtures are nominal and may vary within the range of tolerance established by ANSI standards. These measurements are subject to change or cancellation. No responsibility is assumed for use of superseded or voided pages.