Birlea®

Assembly Instructions

Thank you for purchasing a Birlea product

For a chance to win a Love2Shop voucher simply post a picture of your new product on your preferred social channels tagging Birlea Furniture. One winner will be selected at random each month.

*Terms & conditions may apply.

Are you happy with your purchase?

Yes: That's great, we would love to hear more from you. Please leave us a review on our Trustpilot link on the QR code here. Your feedback will be greatly appreciated.

SCAN ME

No: If for any reason there is something missing, indifferent or incorrect with your order, please contact the retailer that you purchased your item from.

Build time: 45 **minutes with** 2 **person build.**

ASSEMBLY INSTRUCTIONS
NOAH 6 DRAWER CHEST

IMPORTANT: READ THESE INSTRUCTIONS CAREFULLY BEFORE ASSEMBLING OR USING YOUR NOAH 6 DRAWER CHEST

PLEASE KEEP THESE INSTRUCTIONS FOR FUTURE REFERENCE.

HEALTH & SAFETY:

DO NOT use this item if any parts are missing, damaged or worn.
DO NOT use this item unless all fixings are secured.
Please keep small parts out of reach of children
Always use on a level, even surface.

CARE & MAINTENANCE:

Assemble in the room of use.
Assembly should be carried out with this item laying flat, not standing upright.
Assemble on a soft, clean surface to prevent damage.
Periodically check all screws & fixings to ensure they are secure.
DO NOT push the item as this will damage the base.
Always lift the item with two people.
Keep any sharp objects away from the item.

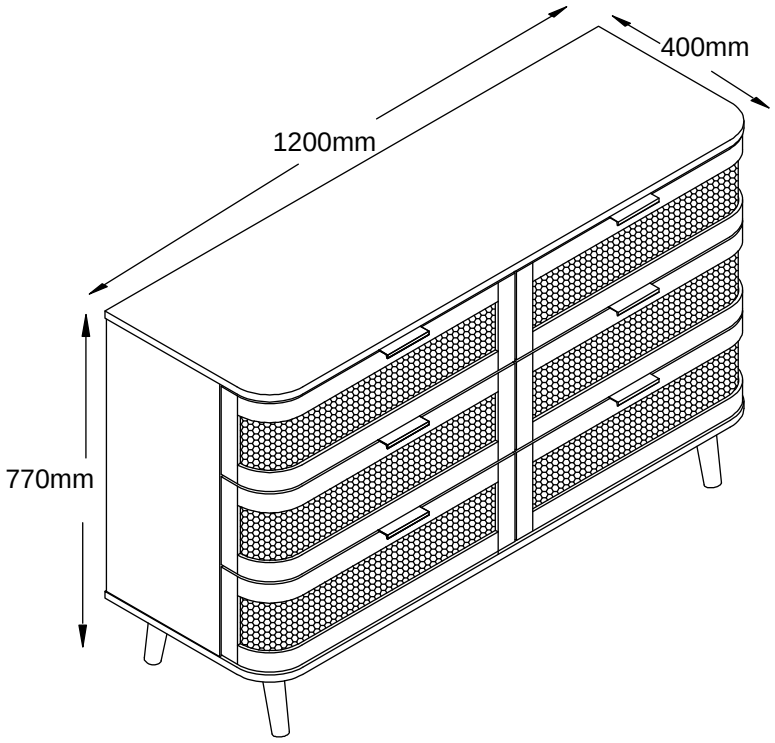

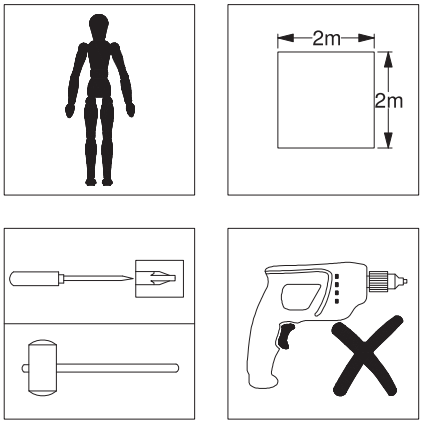

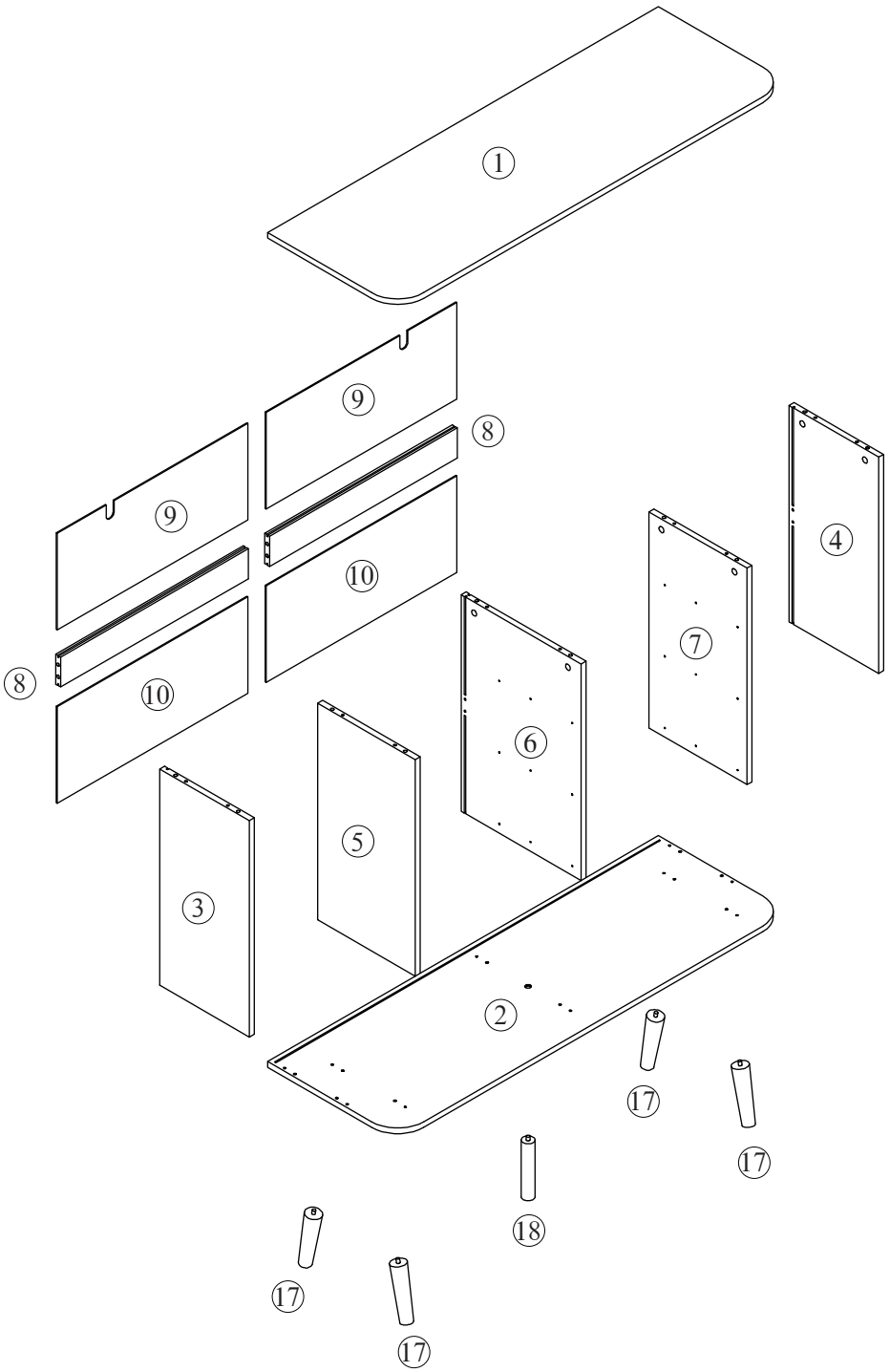
1
9
8
9
10
8
10
4
7
6
5
3
2
17
17
18
17
17

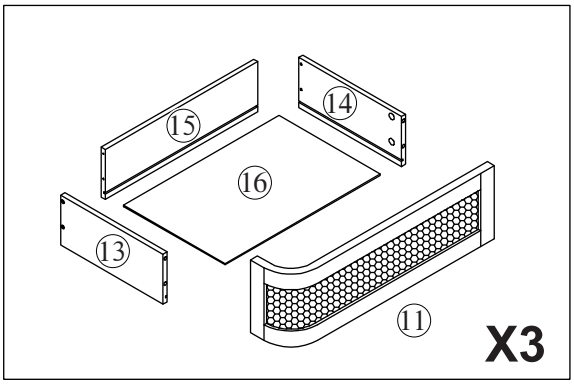
15
14
16
13
11
X3

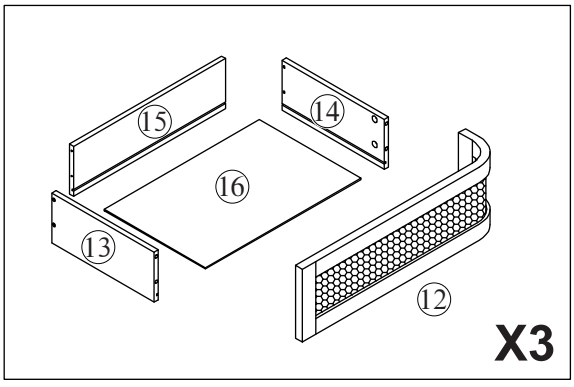
15
14
16
13
12
X3

Parts List

Part	Descripion	Box	Qty
1	Cabinet Top	1	1
2	Bottom Panel	1	1
3	Left Side Panel	1	1
4	Right Side Panel	1	1
5	Left Side Support Panel	1	1
6	Middle Division Panel	1	1
7	Right Side Support Panel	1	1
8	Back Stretcher	1	2
9	Upper Back Panel	1	2
10	Lower Back Panel	1	2
11	Left Side Drawer Front Panel	1	3
12	Right Side Drawer Front Panel	1	3
13	Drawer Left Side Panel	1	6
14	Drawer Right Side Panel	1	6
15	Drawer Back Panel	1	6
16	Drawer Bottom Panel	1	6
17	Feet	1	4
18	Center Adjustable Foot	1	1

Hardware List

Part	Descripion	Qty
A	Cam Bolt M6X35MM	42
B	Cam Lock 15X10MM	42
C	Wooden Dowel M6X30MM	20
D	Screw M4X35MM	36
E	Screw M3X12MM	72
F	Handle	6
G	Screw M3X12MM	16
H	Metal Leg Plate	4
I	Screw M4X14MM	22
J	Metal Anti Tip Bracket	2
K	Wall Plug	2
L	Plastic Corner Support	16
M	Slide Sets METAL RUNNER 12" (CL)	6
	Slide Sets METAL RUNNER 12" (CR)	
	Slide Sets METAL RUNNER 12" (DL)	
	Slide Sets METAL RUNNER 12" (DR)	
N	Screw M3X12MM (Rainbow)	12

** You will need a small mallet and a screwdriver for assembly.
** Some screws and wooden dowel may remain.

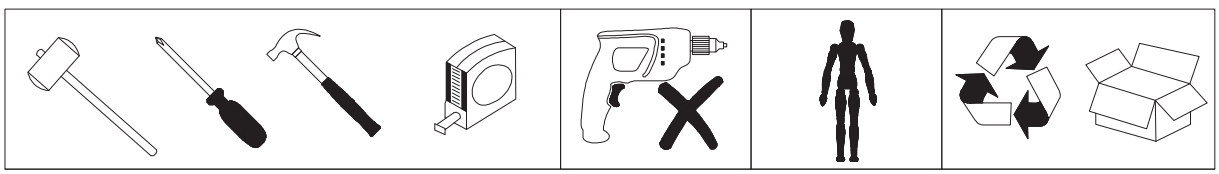

DO NOT use any power tools as this may damage the frame and will invalidate any claim.

step 1

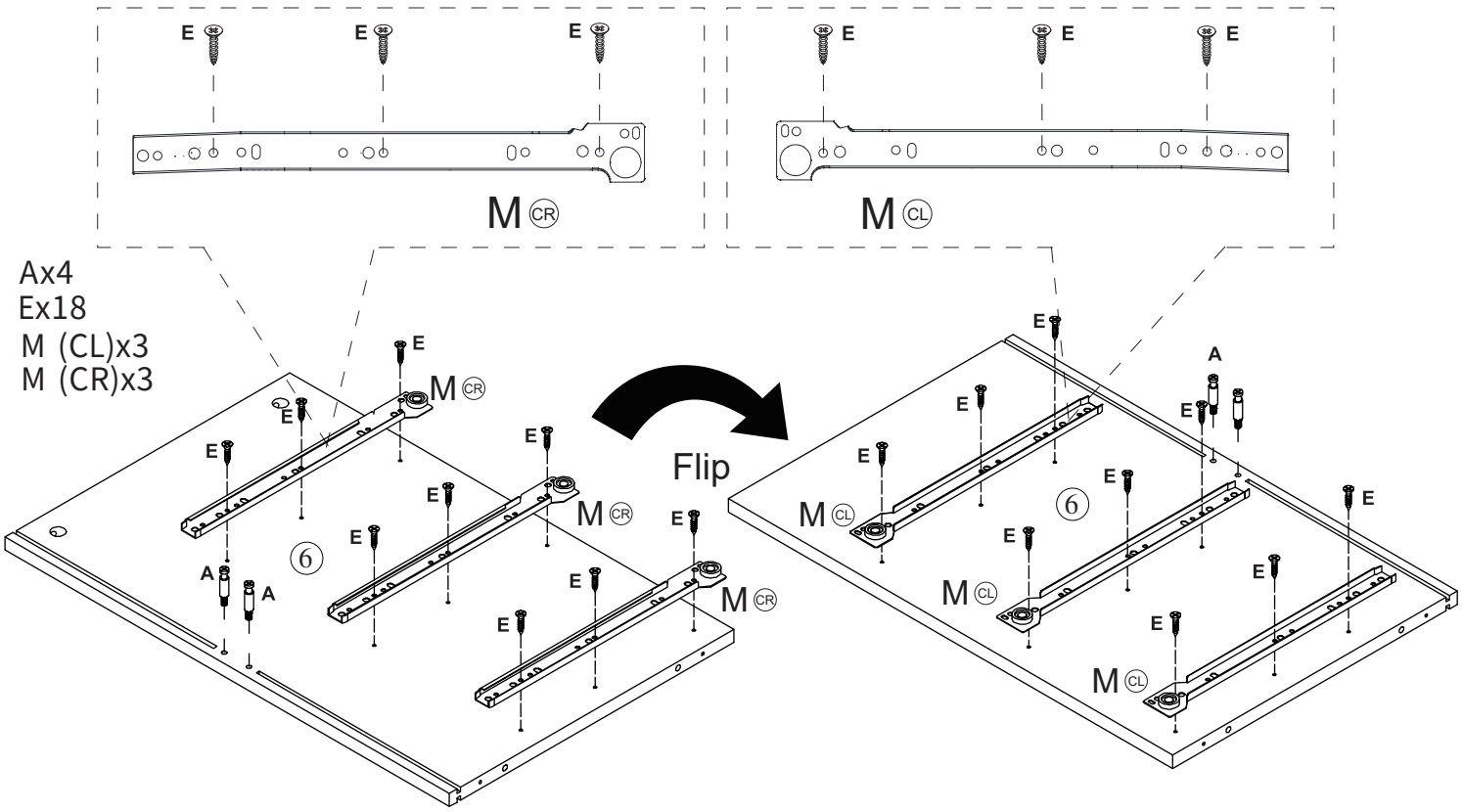

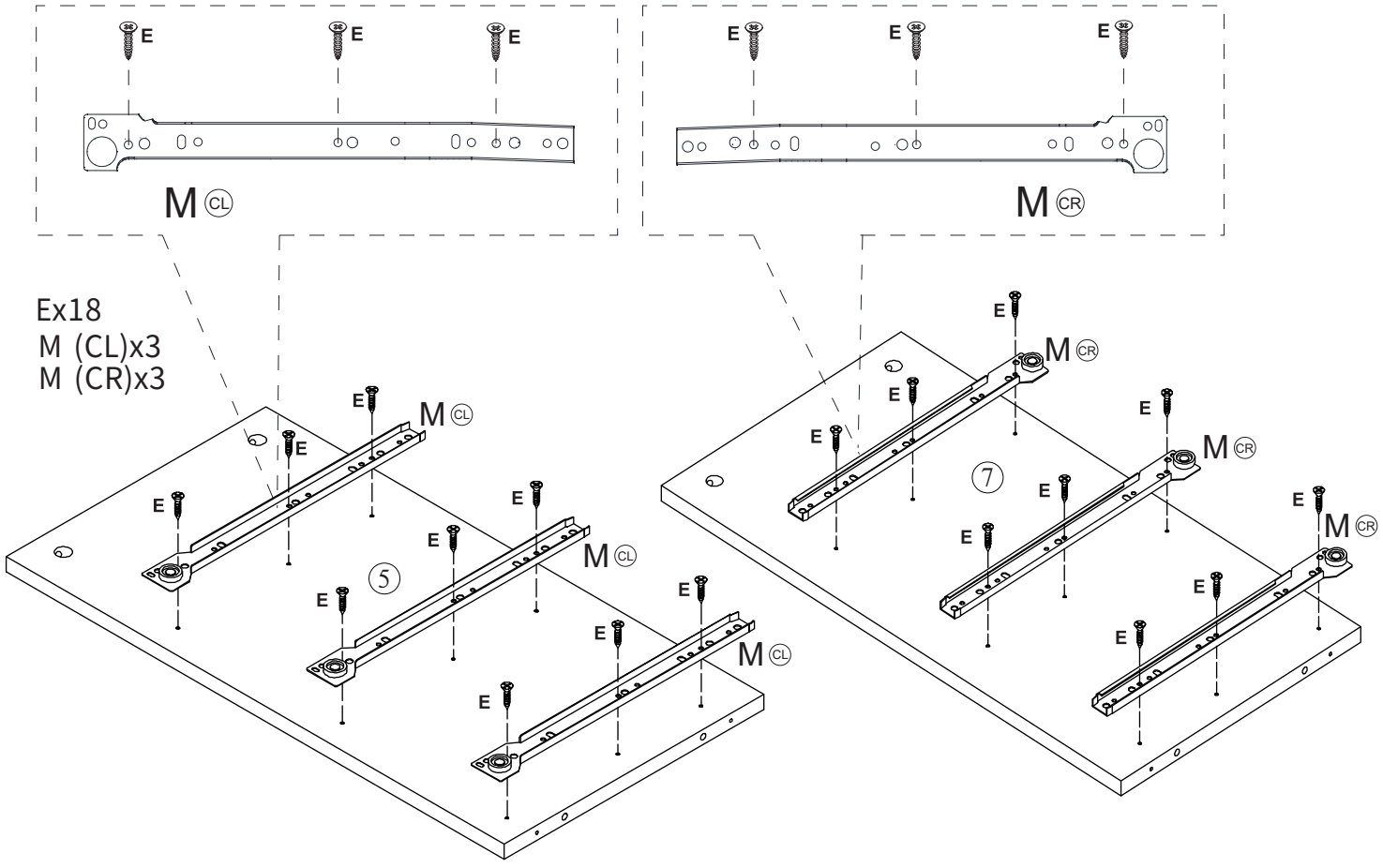

Ax4

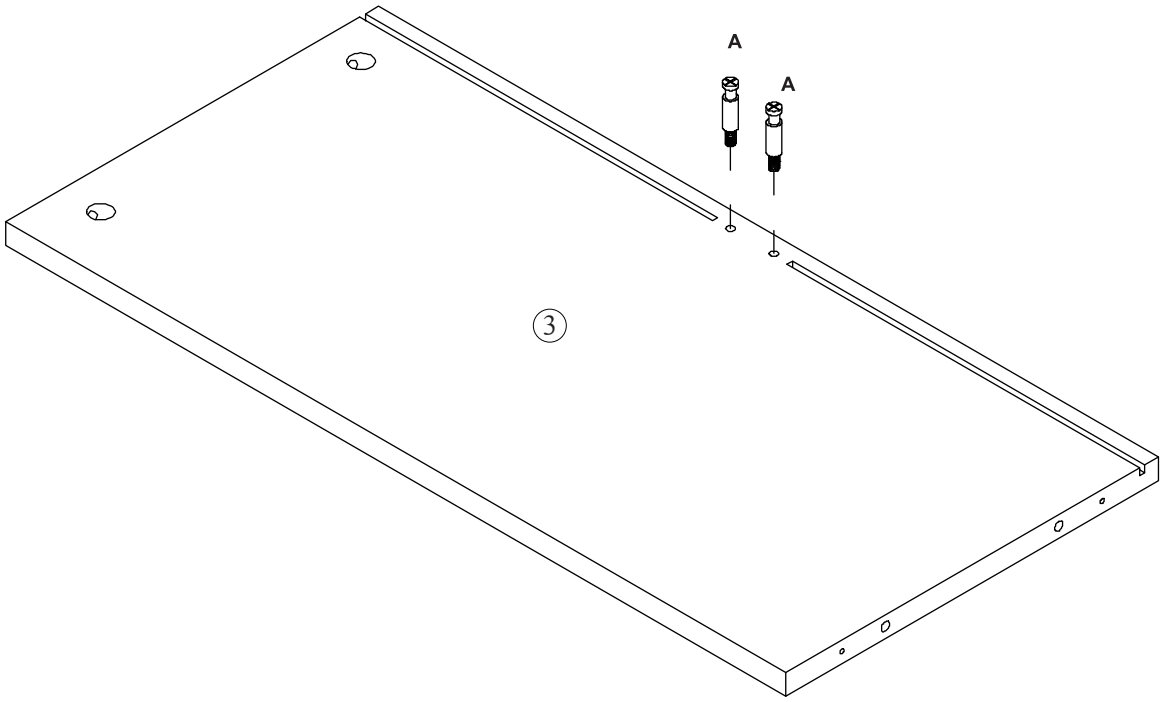

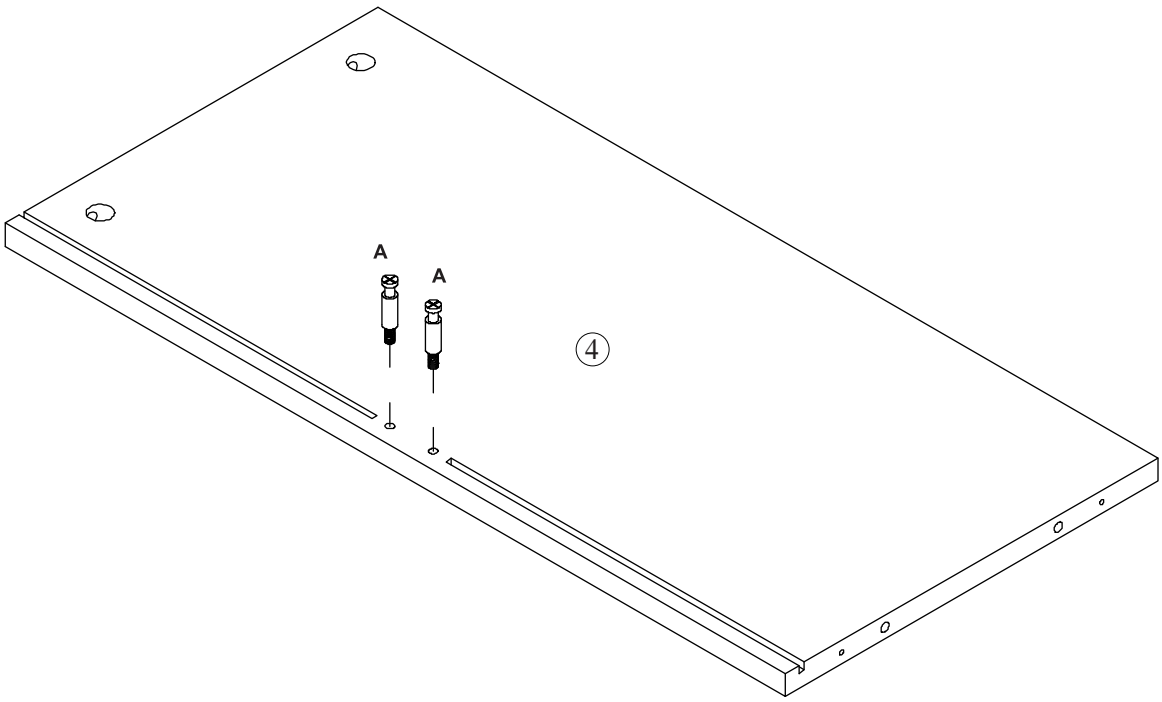

Step 3

Bx4

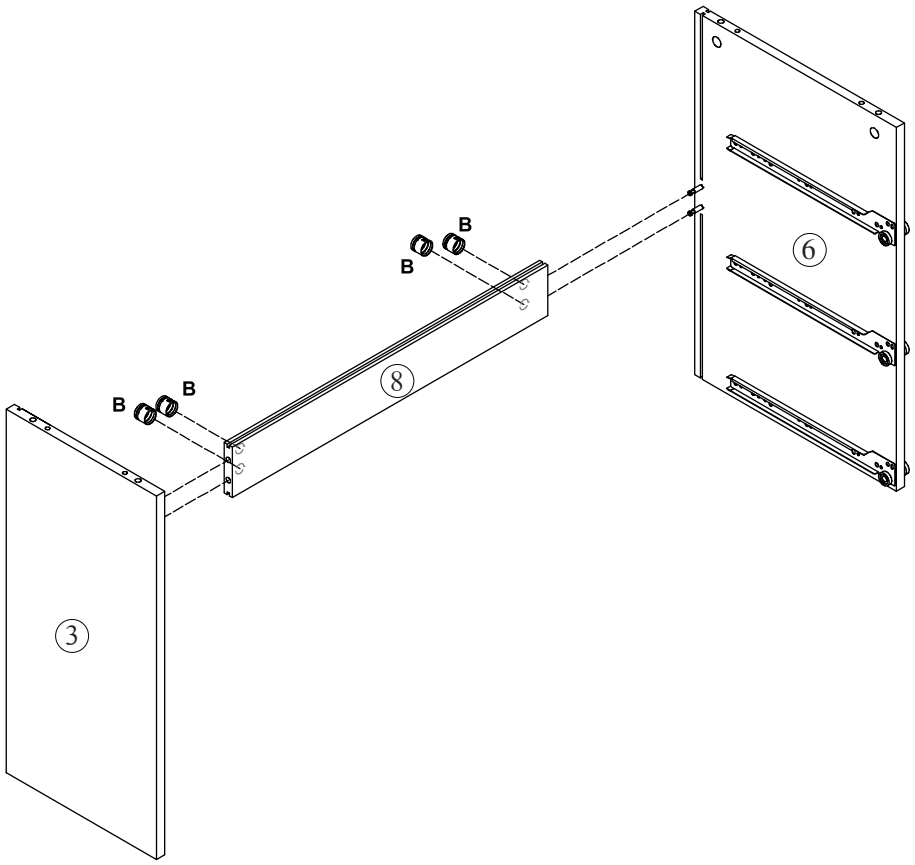

Step 4

Bx4

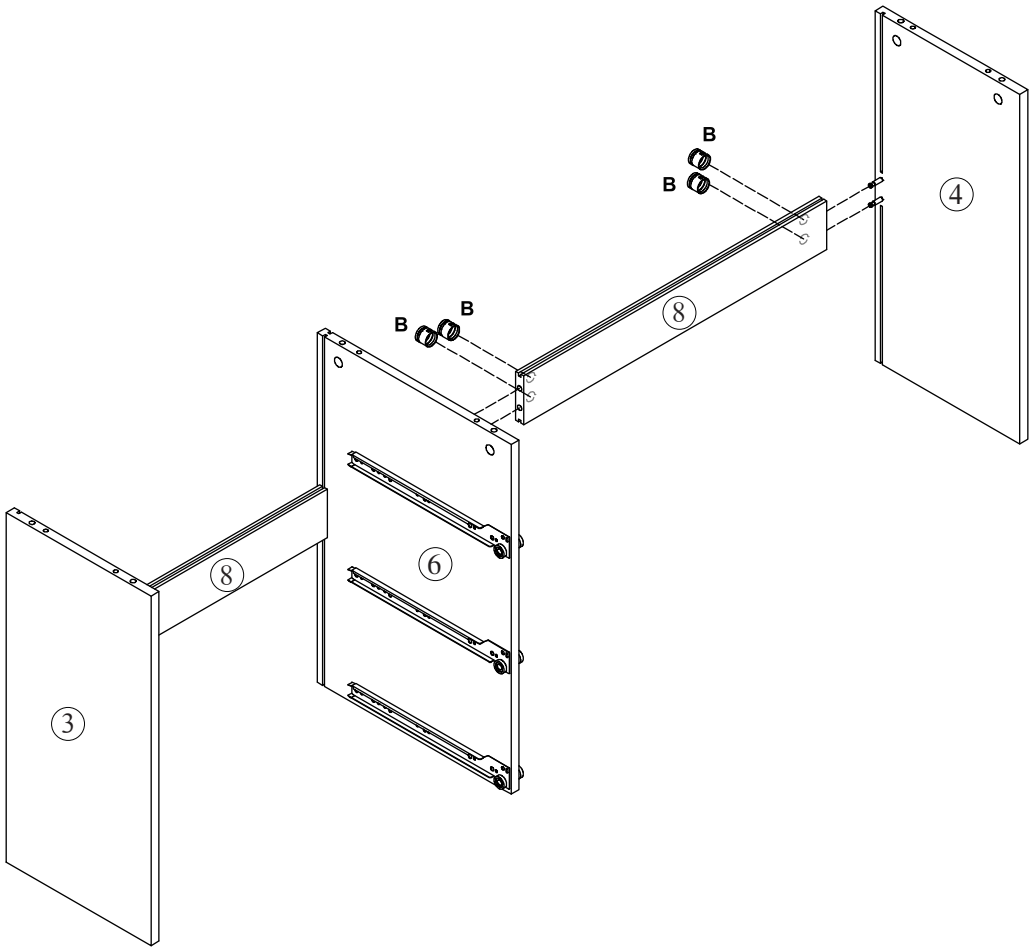

Step 5

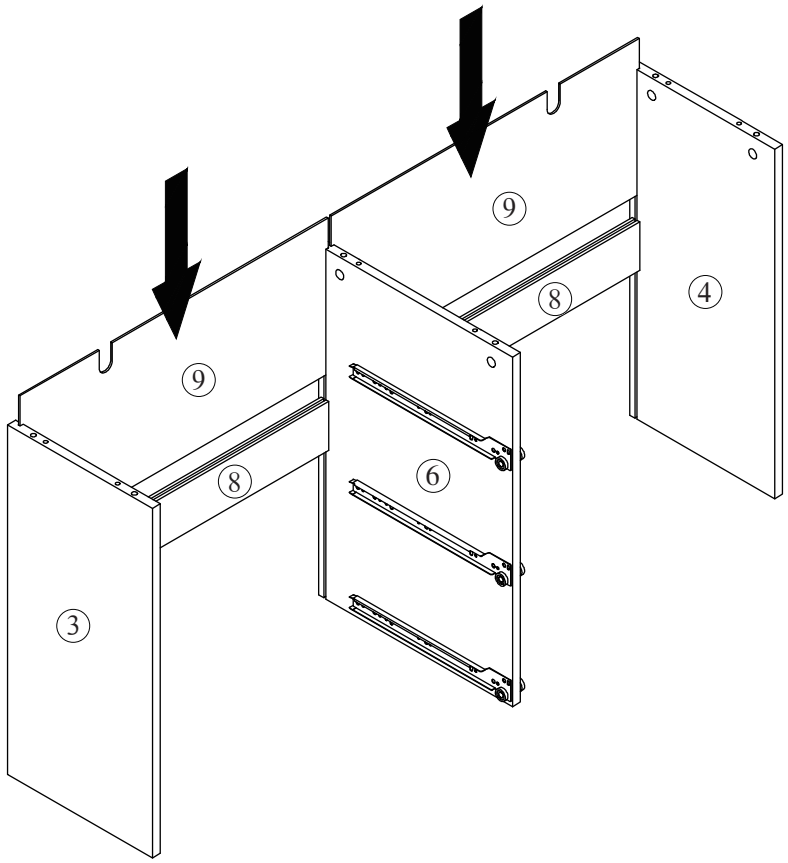

Step 6

Ax10
Jx2
Ix2

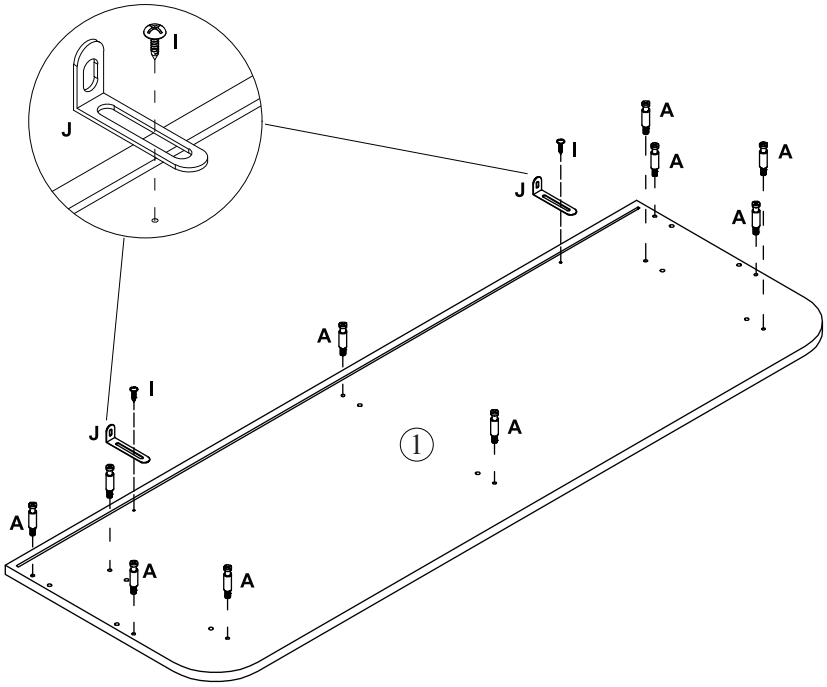

Step 7

Bx6
Cx6

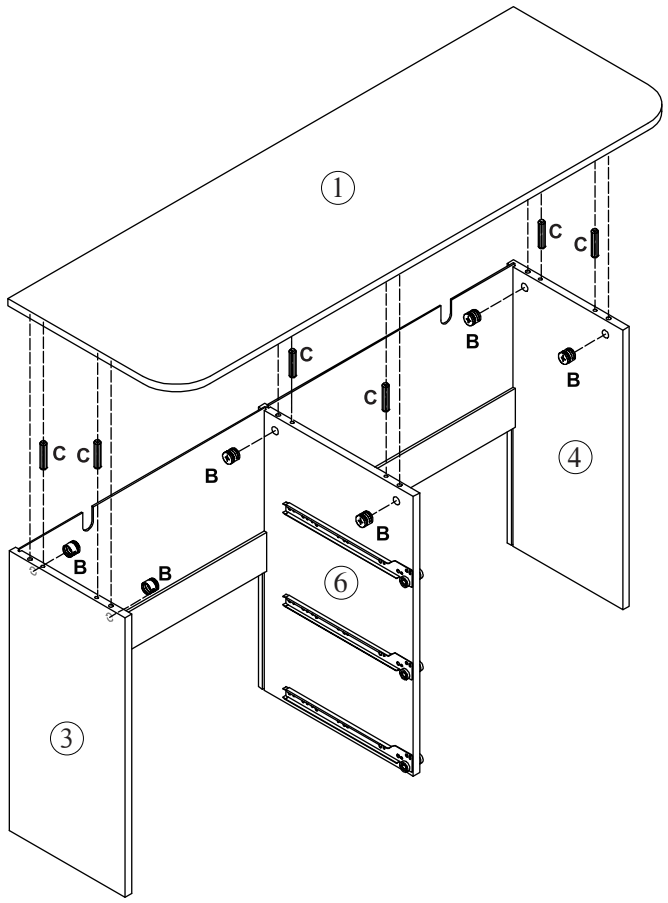

Step 8

Bx4
Cx4

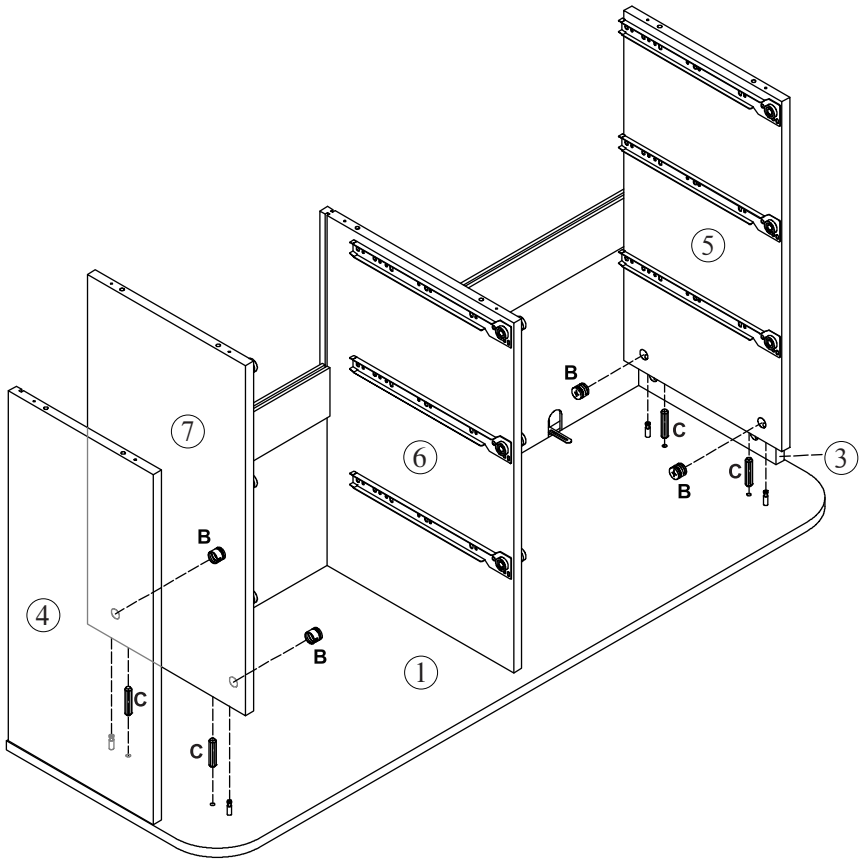

Step 9

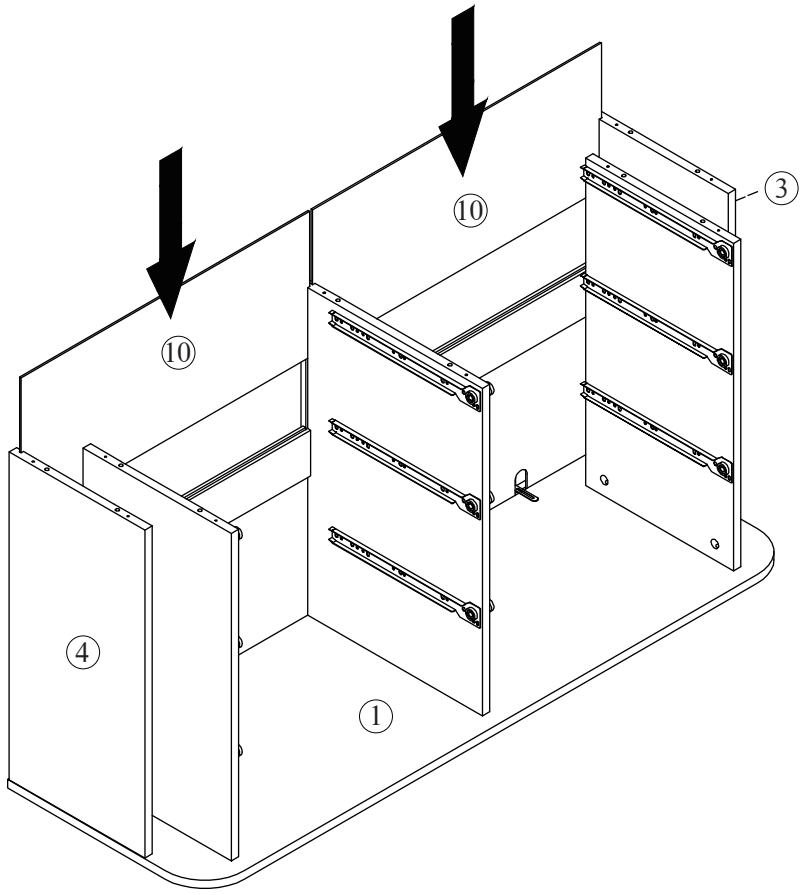

Step 10

Dx10
Cx10

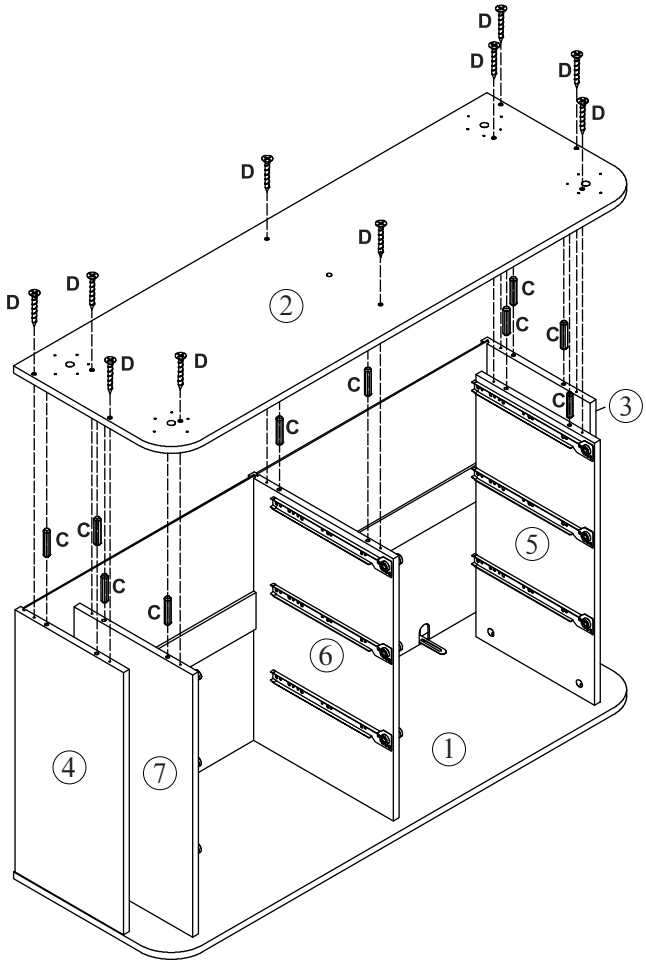

Step 11

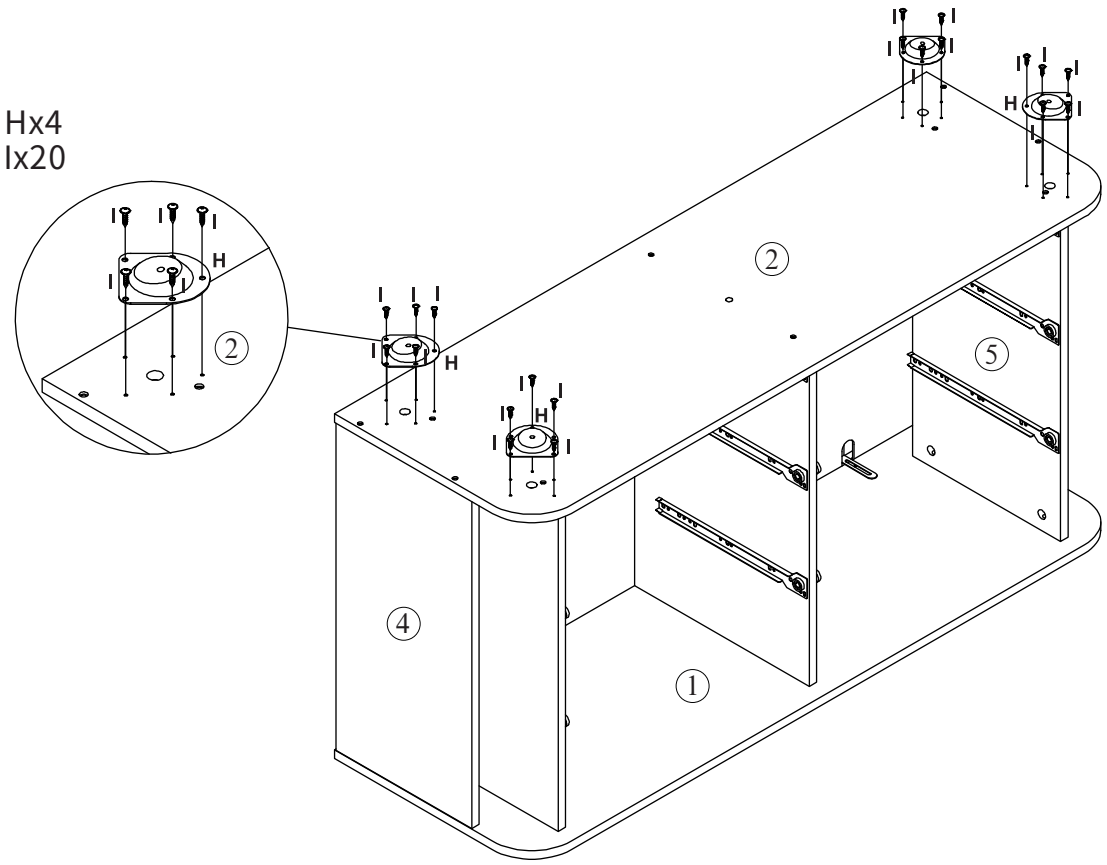

Step 12

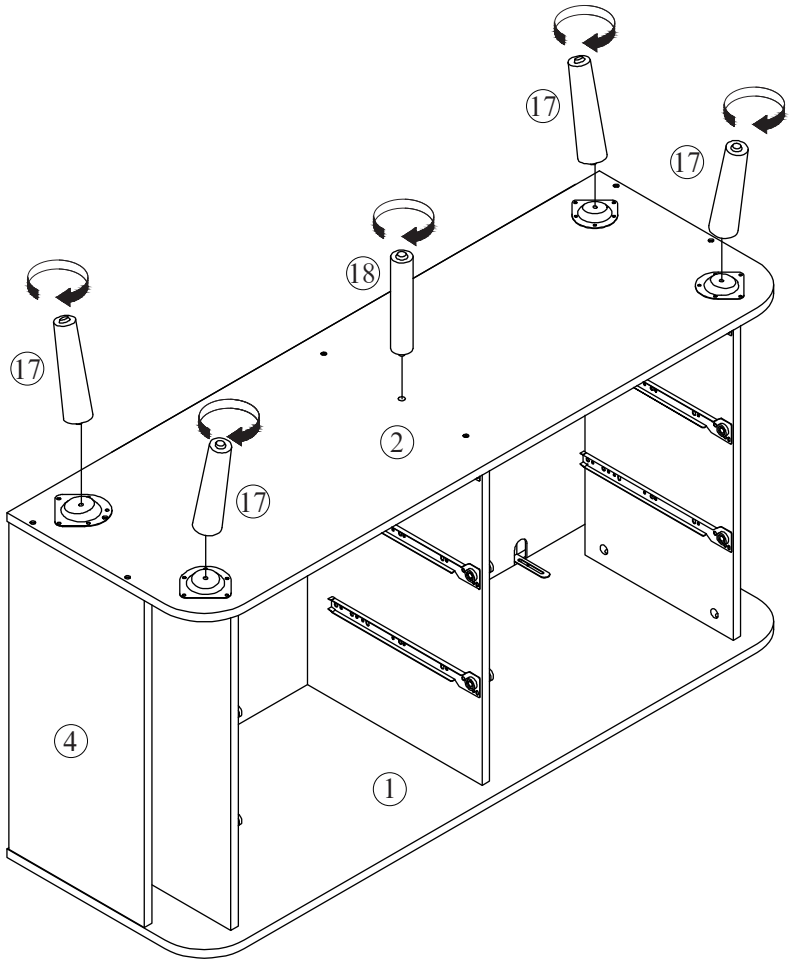

Step 13

Gx16
Lx16

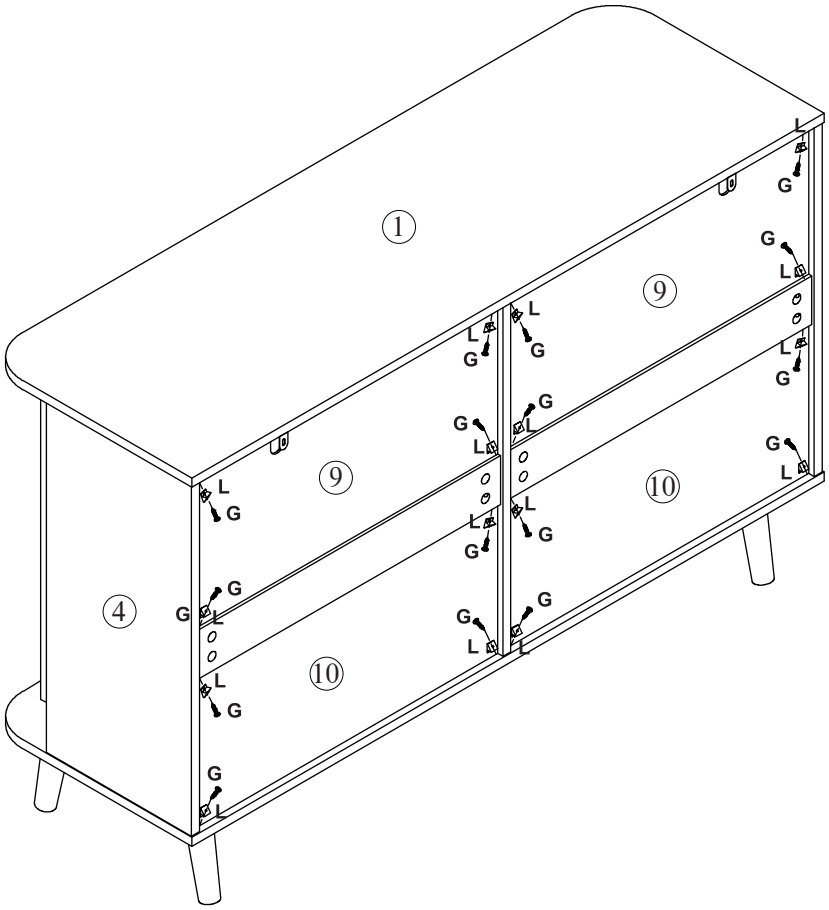

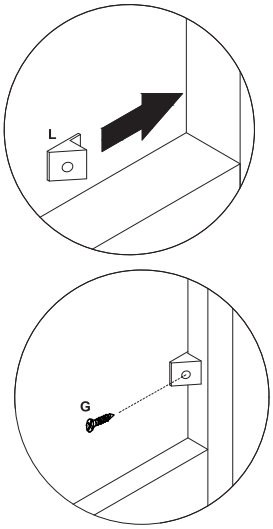

Step 14

Dx2
Kx2

WALL

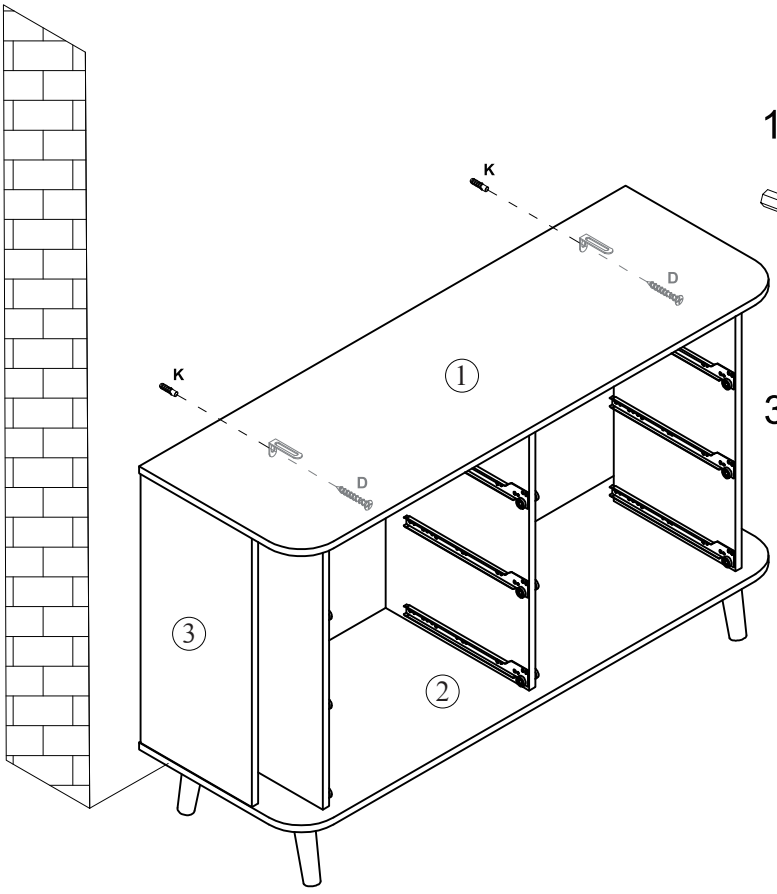

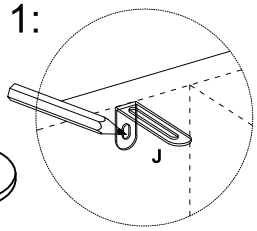

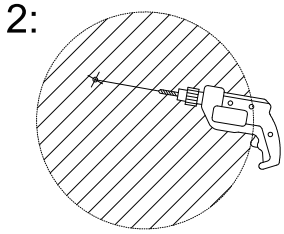

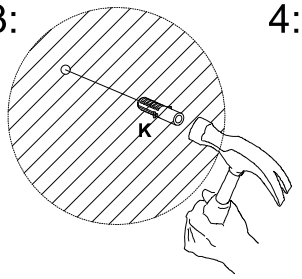

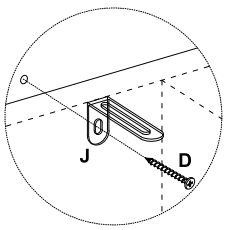

Step 15

Ax24

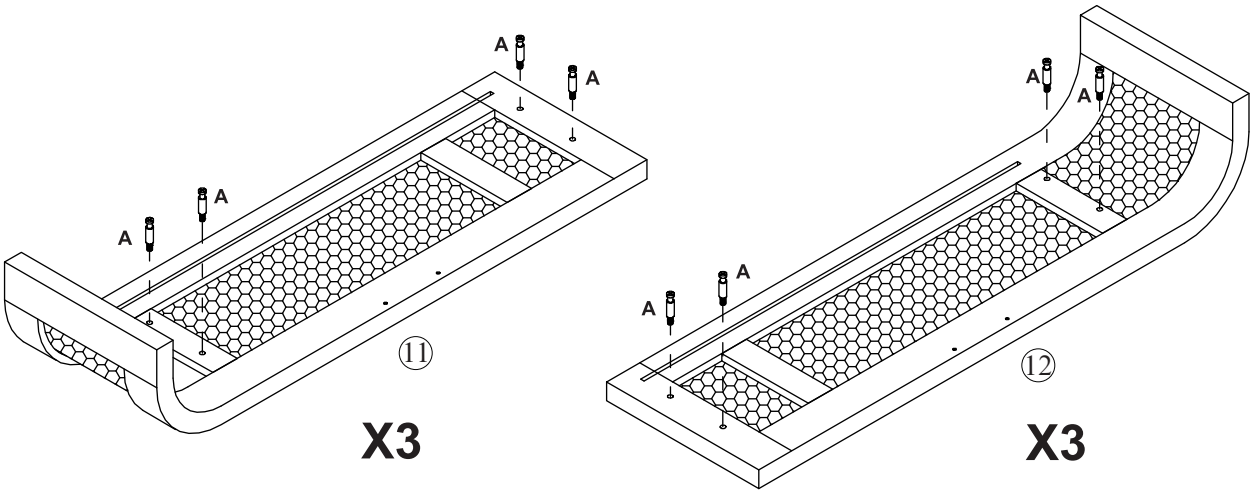

Step 16

Dx24

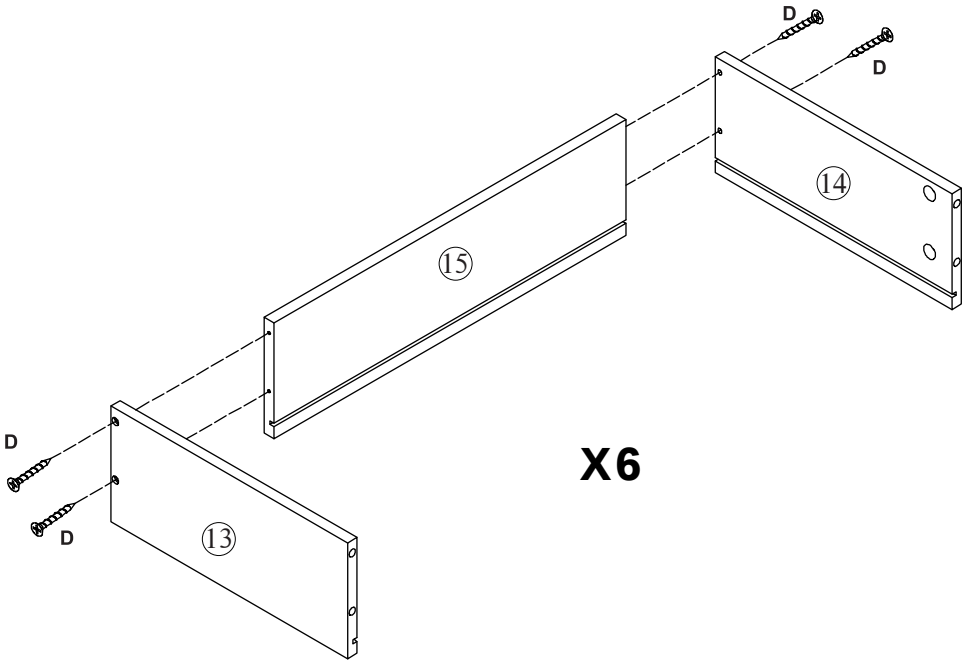

Step 17

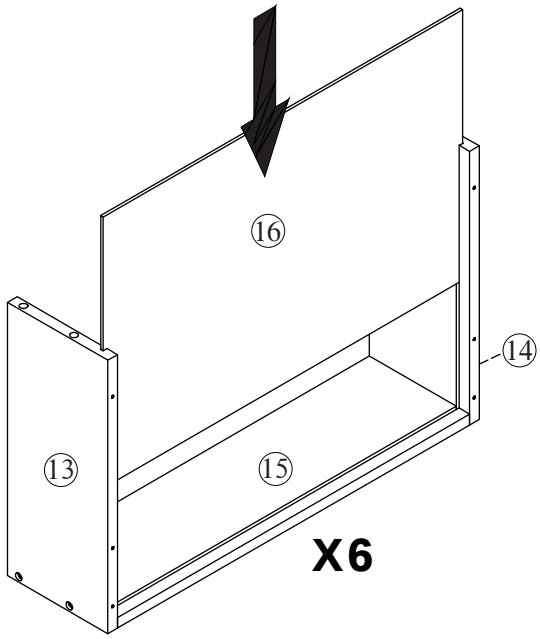

Step 18

Bx24

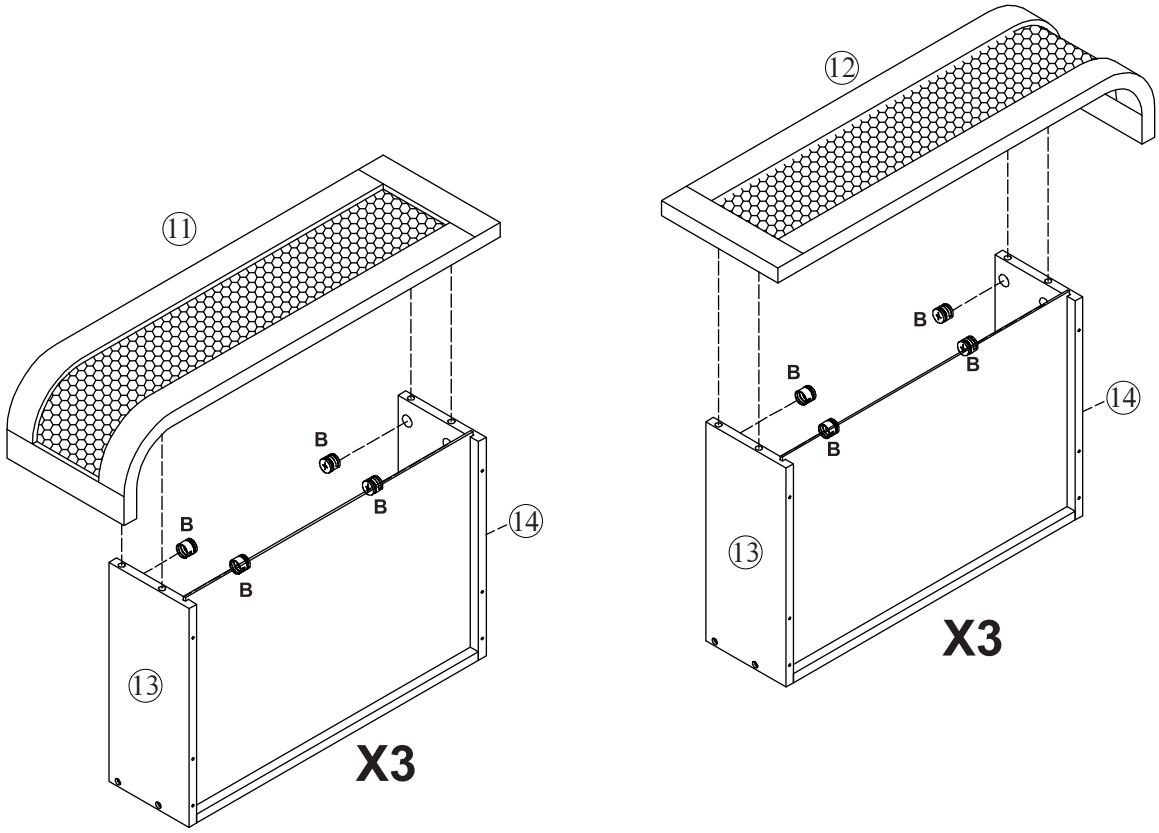

S000403

Step 19

Ex36
M(DR)x6
M(DL)x6

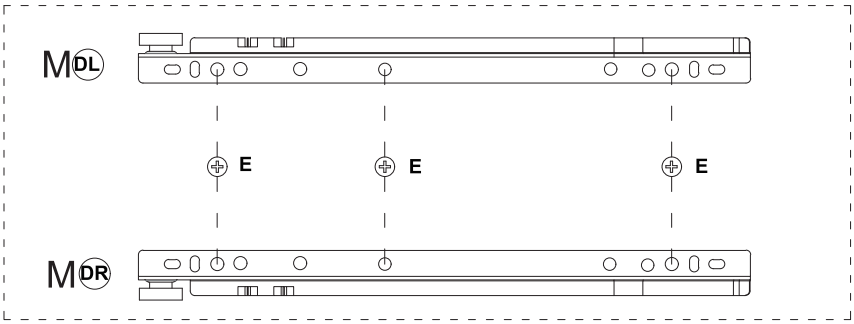

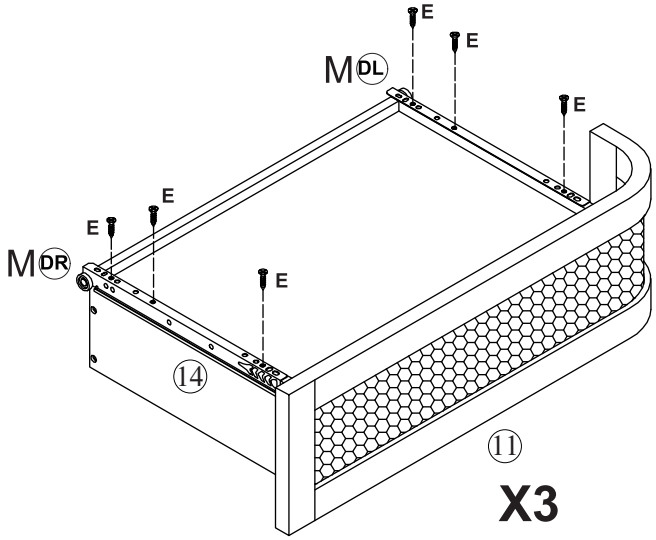

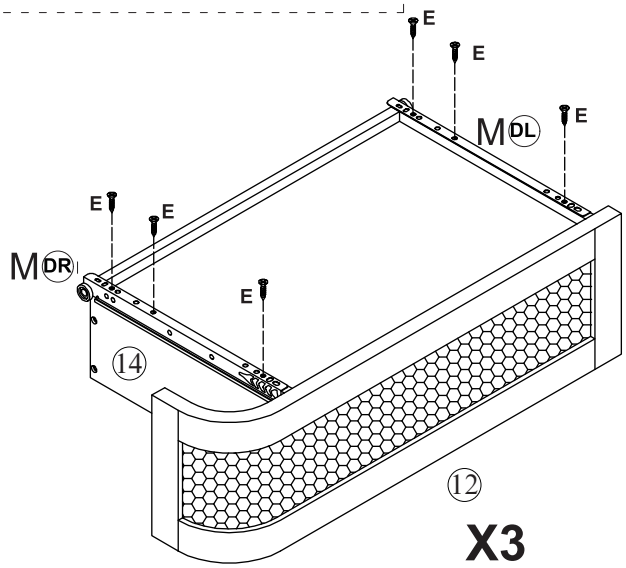

Step 20

Nx12
Fx6

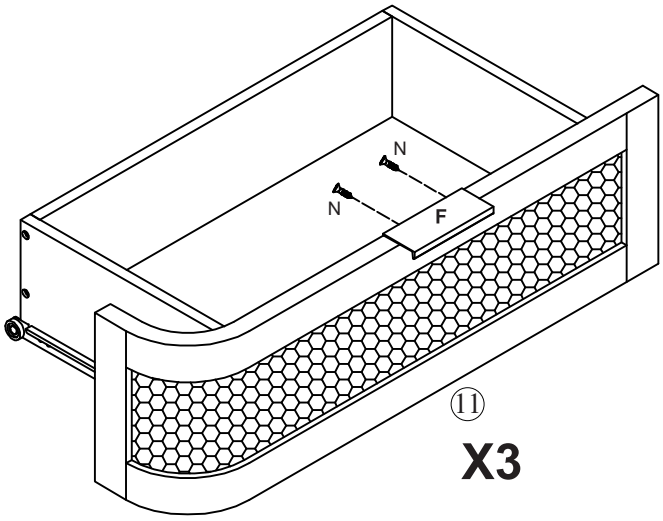

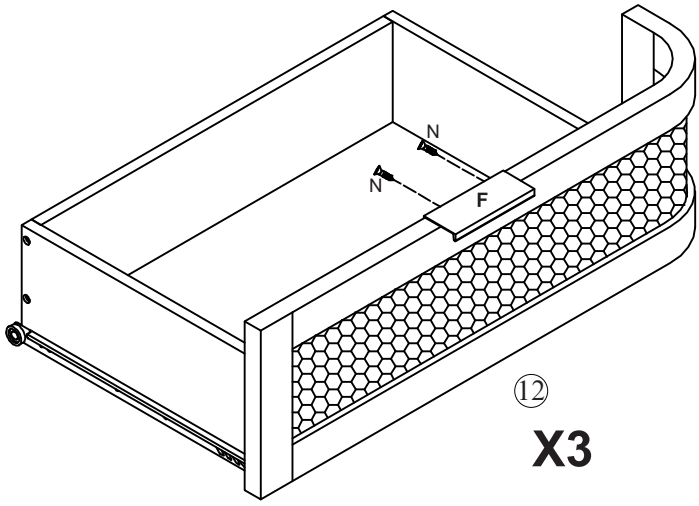

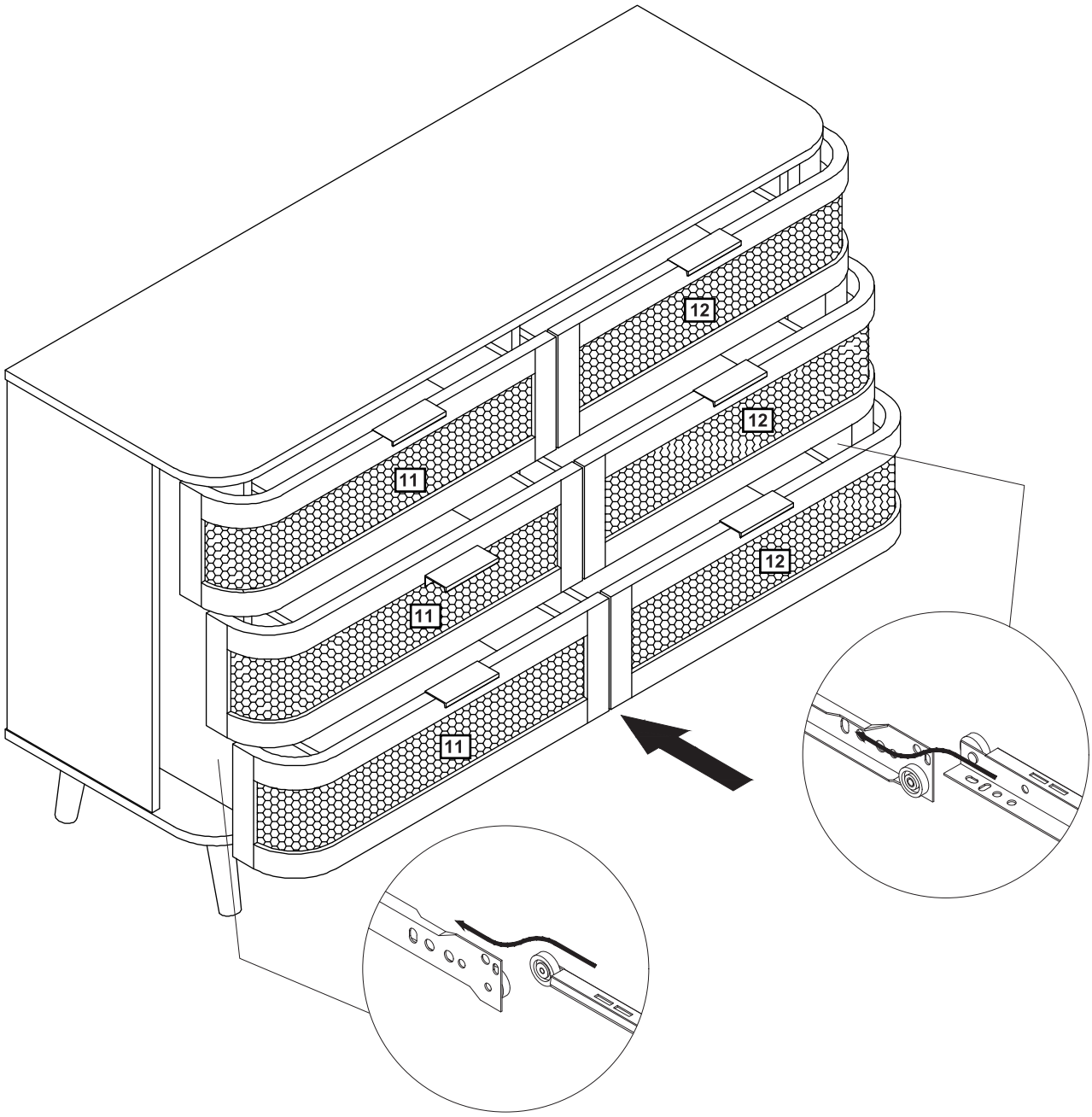

Additional Information:

- For complete product information, images and dimension diagrams please visit . www.birlea.com
- If you experlence any issues, please contact the retailer from whom you purchased the product.
- Please tag us.