ASSEMBLY INSTRUCTIONS

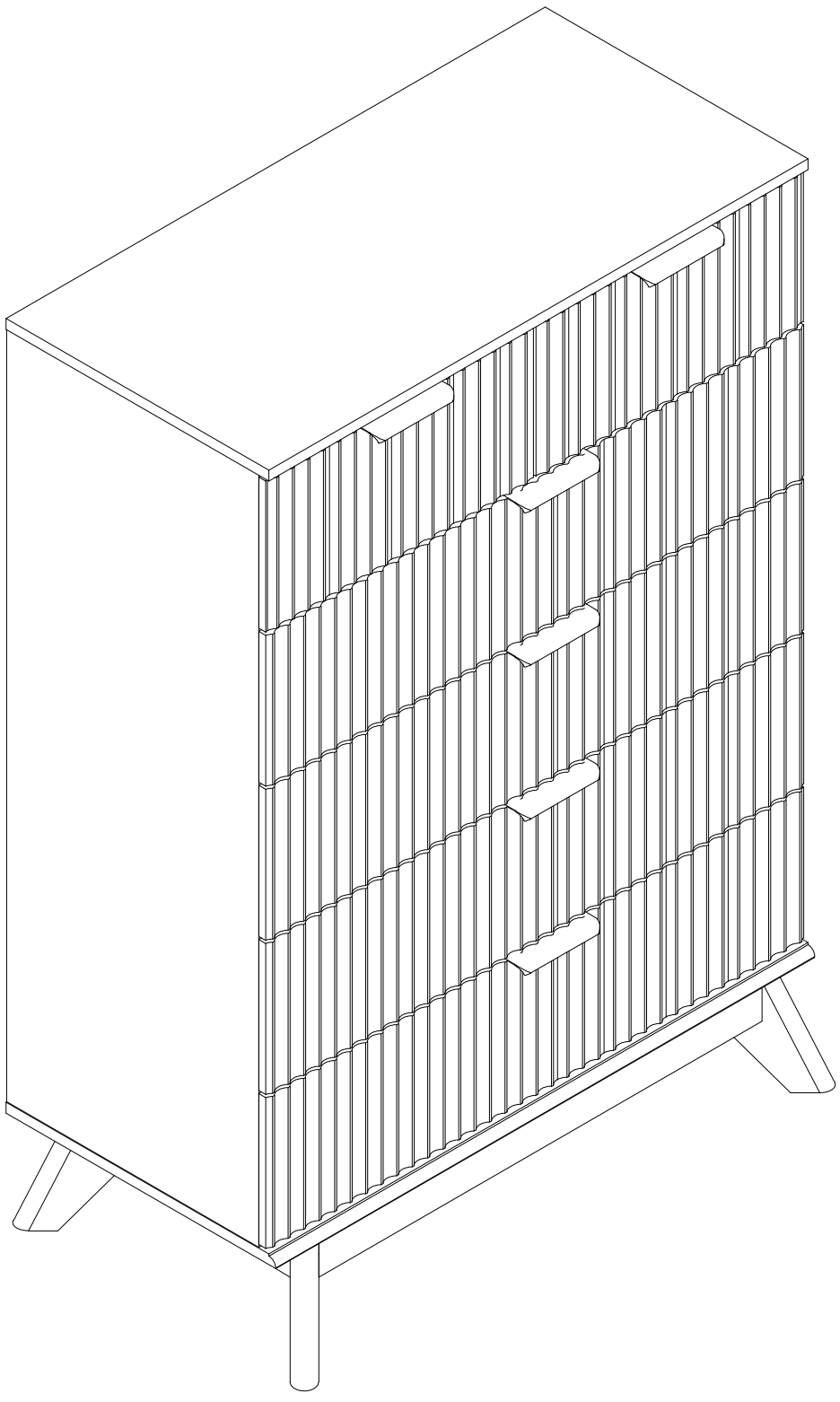

WARNING !

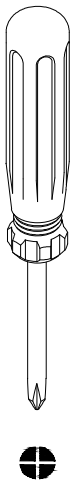

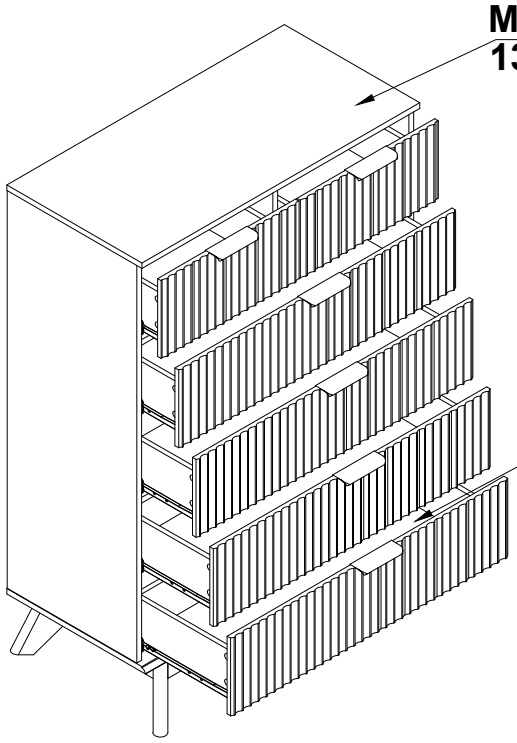

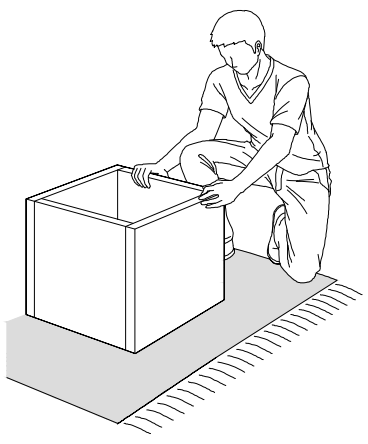

Assembly the furniture on empty carton, carpet, or rug to prevent scratches or damage.

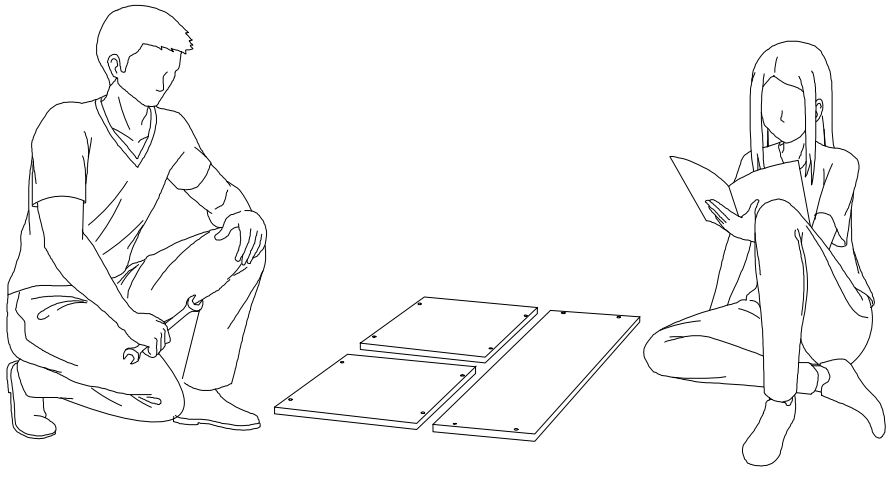

This furniture requires 2 people to assembly.

Make sure no parts are missing or damaged before assembly.

Board Identification

Not actual size

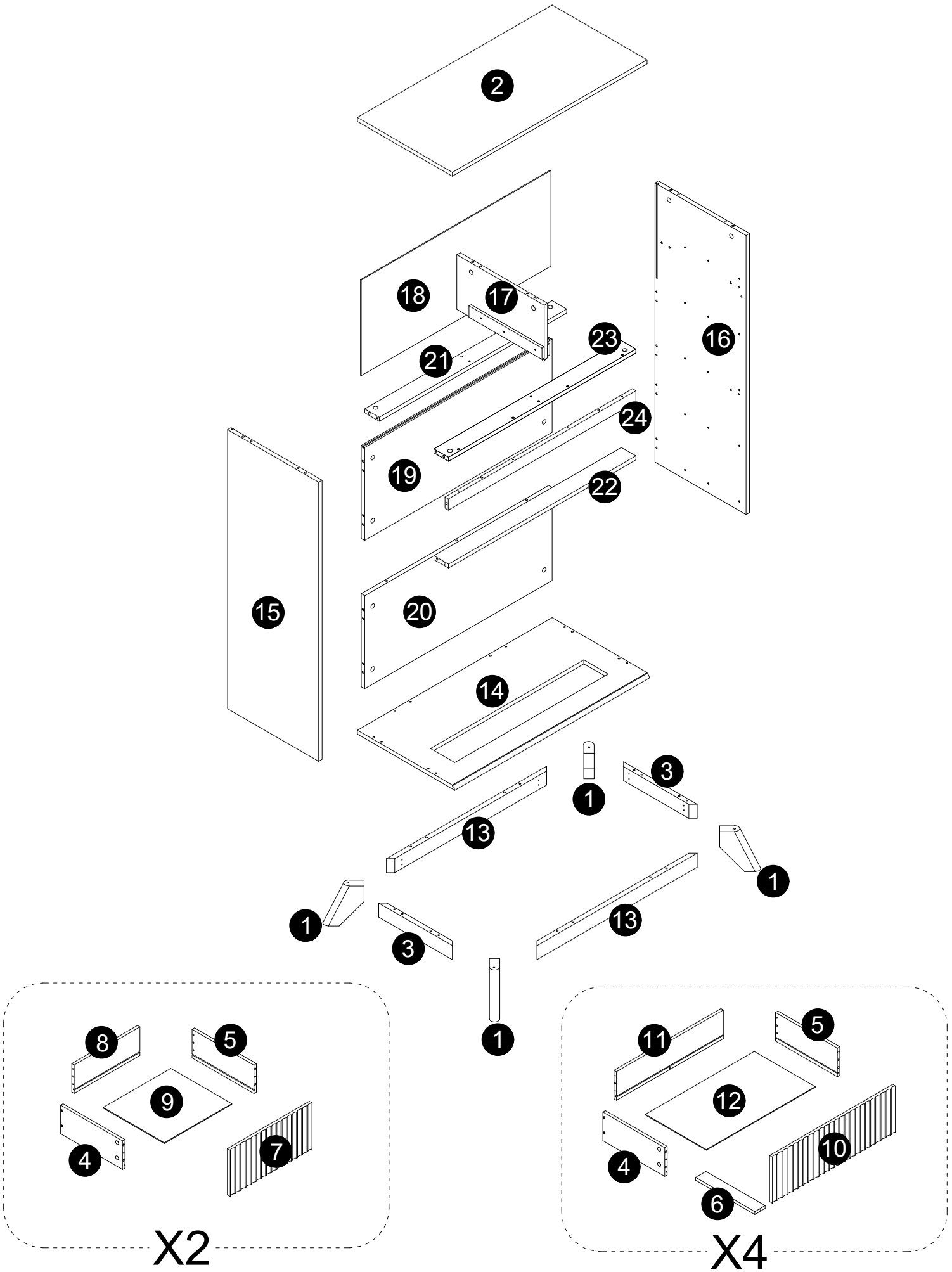

BOARD IDENTIFICATION

Not actual size

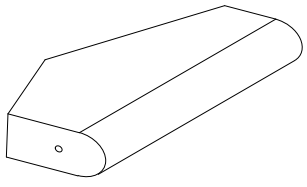

① x4

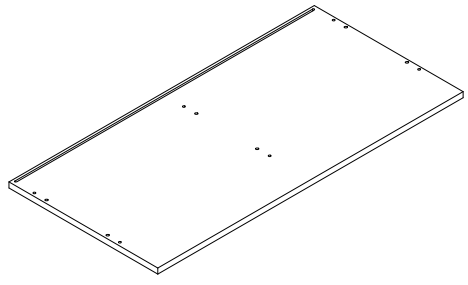

② x1

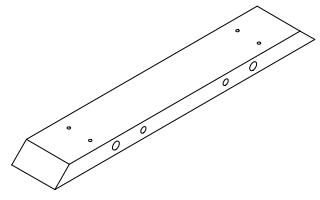

③ x2

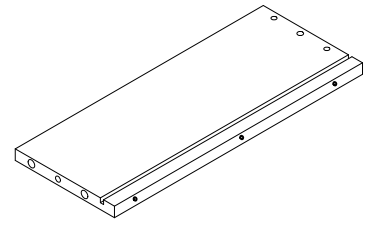

④ x6

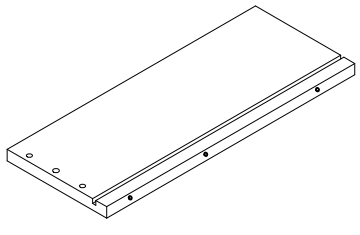

⑤ x6

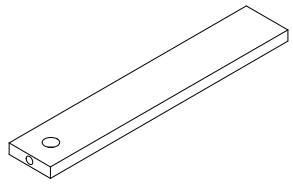

⑥ x4

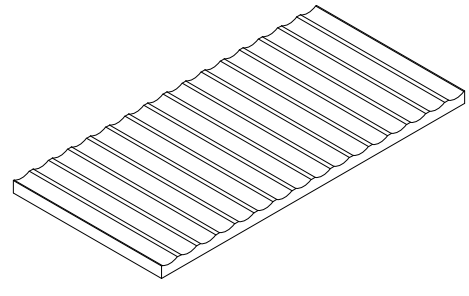

⑦ x2

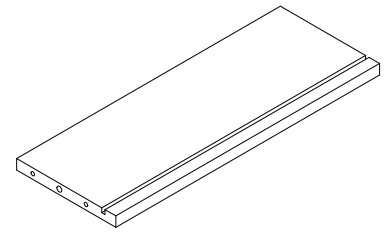

⑧ x2

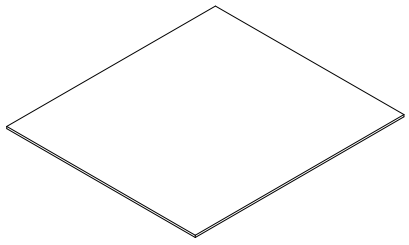

⑨ x2

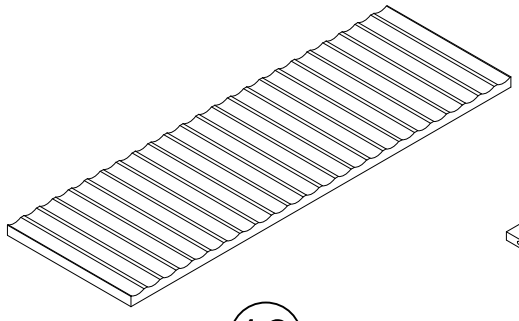

⑩ x4

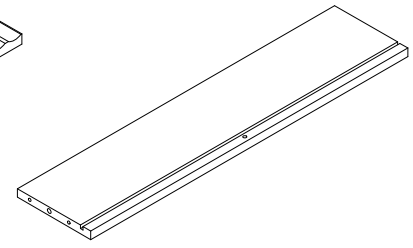

⑪ x4

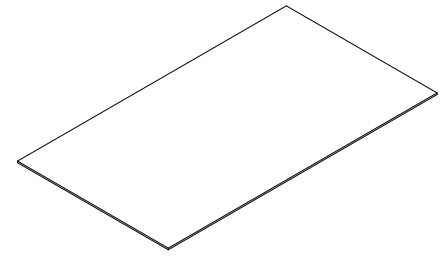

⑫ x4

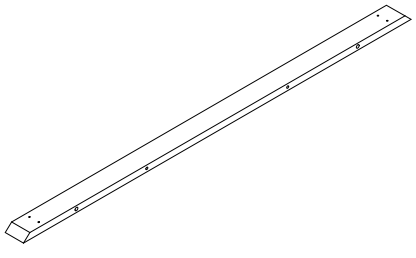

⑬ x2

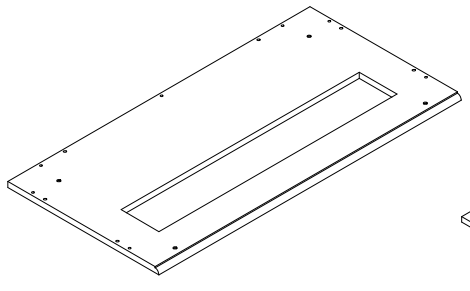

⑭ x1

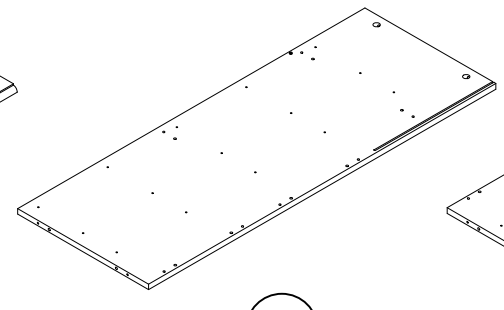

⑮ x1

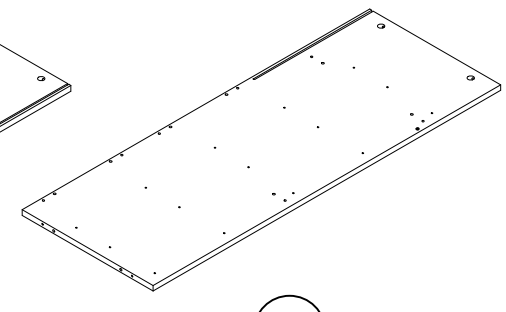

⑯ x1

BOARD IDENTIFICATION

Not actual size

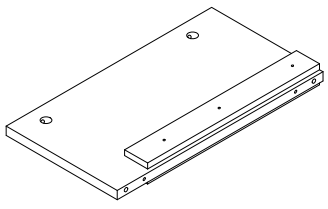

17 x1

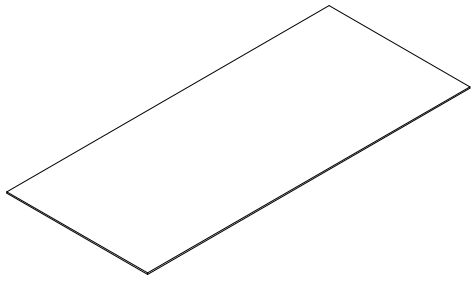

18 x1

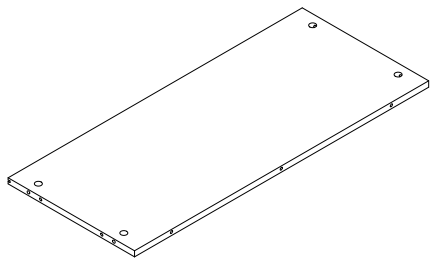

19 x1

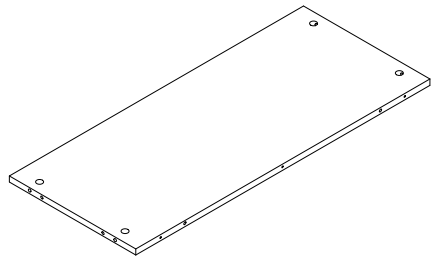

20 x1

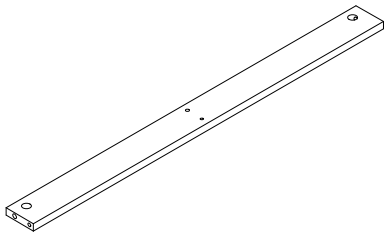

21 x1

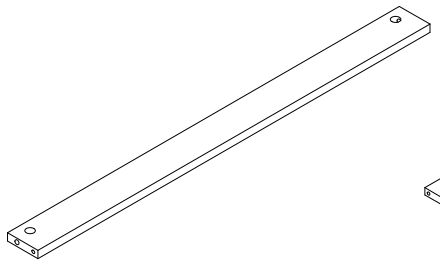

22 x1

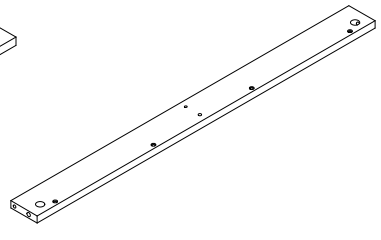

23 x1

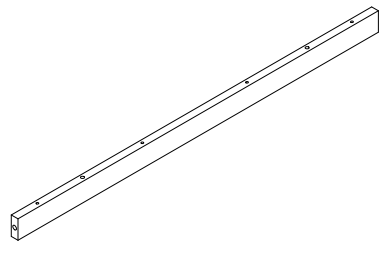

24 x1

HARDWARE LIST

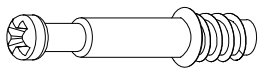

A	x50+3

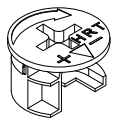

Ø15x9.5

B	x50+3

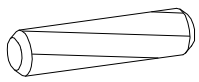

Ø6x30

C	65+3

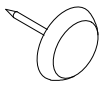

D	x2+2

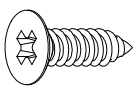

Ø3.5x12

E	x84+3

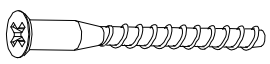

Ø5x40

F	x17+1

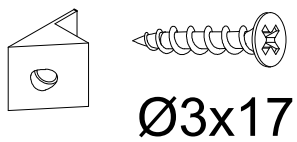

Ø3x17

G	x4



Ø4x35

H	x28+2

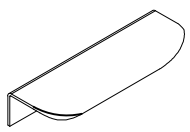

I	x6

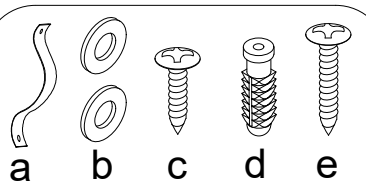

J	x2

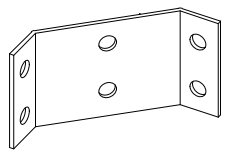

K	x4

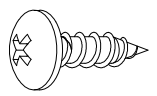

#10*15

L	x16+1

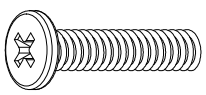

M6x35

M	x8

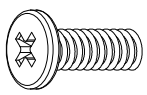

M6x20

N	x8

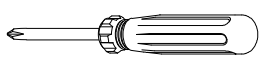

O	x1

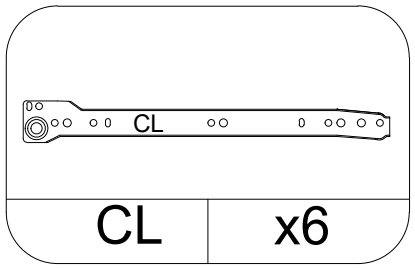

CL	x6

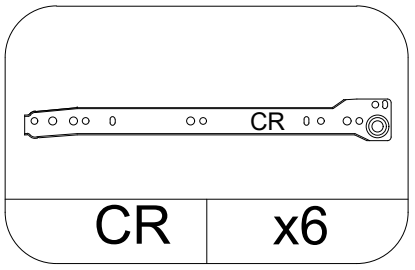

CR	x6

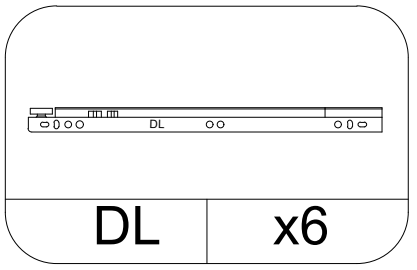

DL	x6

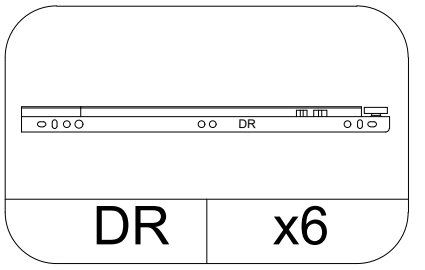

DR	x6

Cam Lock Fastening System

Insert the cam bolt into the hole first, then insert the cam lock and lock it.

1

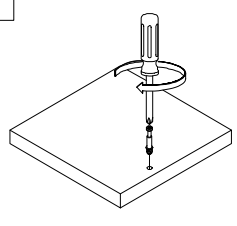

2

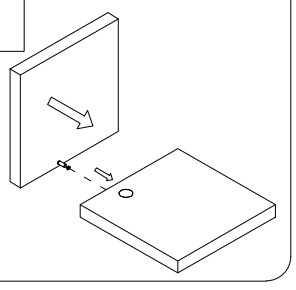

3

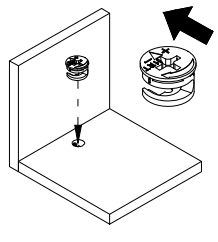

The opening must point toward the edge of the board

4

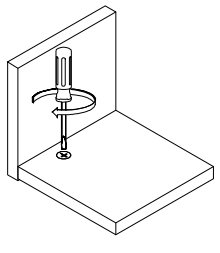

STEP 1

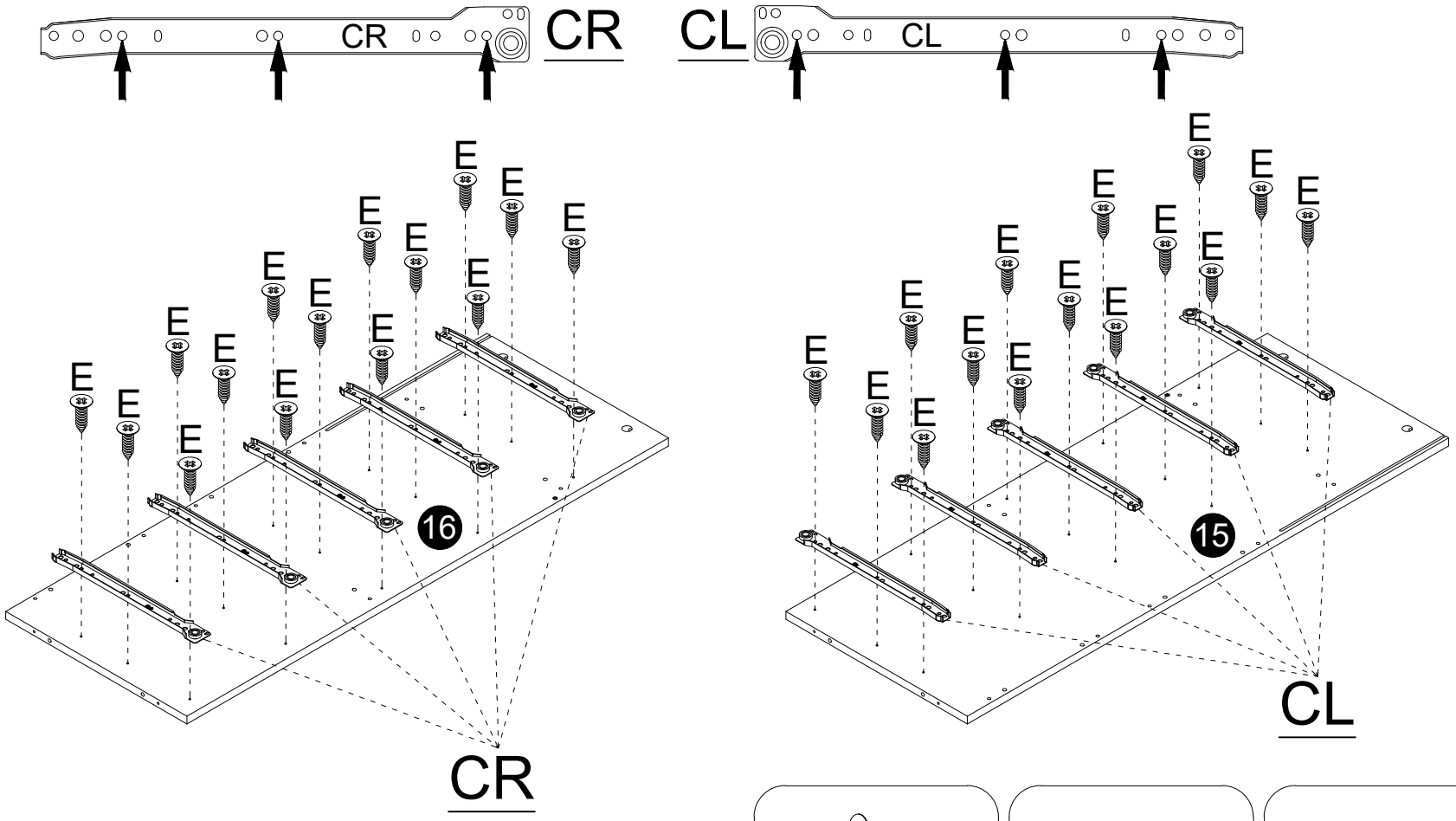

Ø3.5x12	
E	x 30

CL	
CL	x 5

CR	
CR	x 5

STEP 2

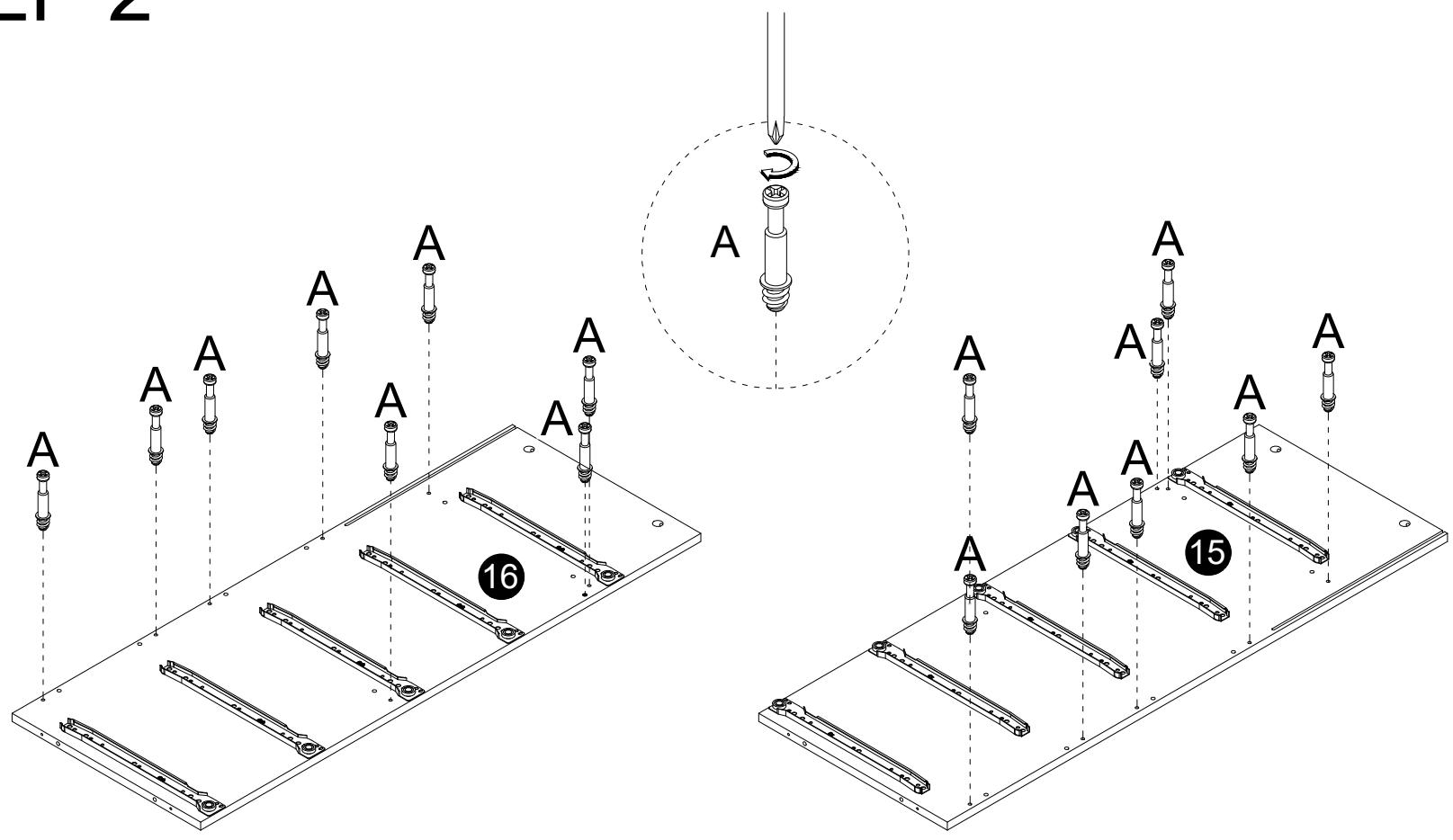

A	
A	x 16

STEP 3

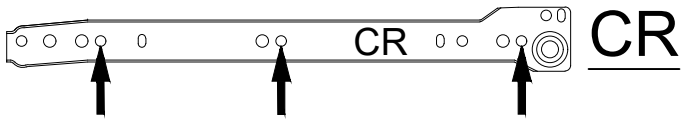

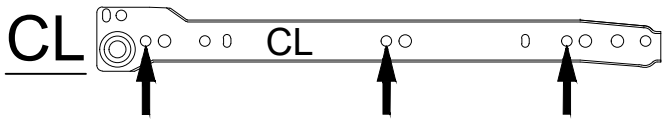

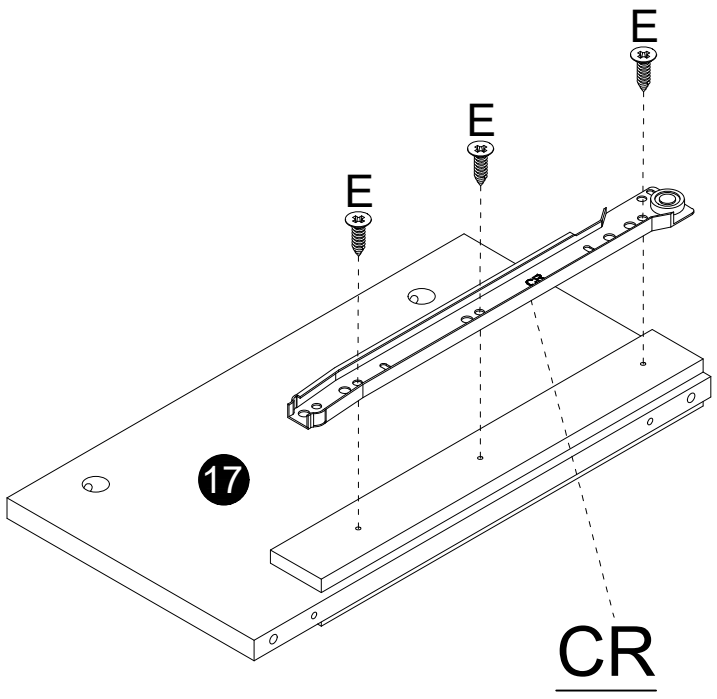

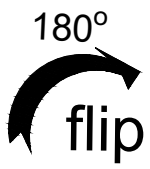

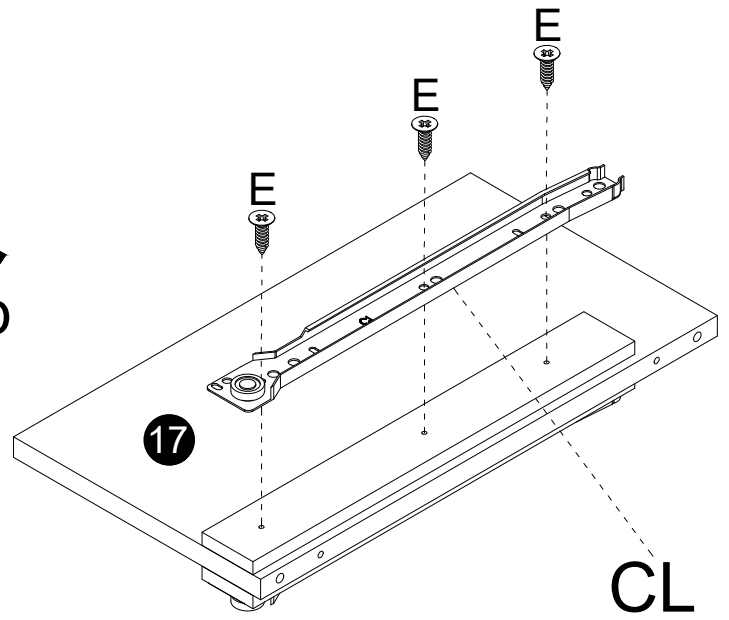

Ø3.5x12	
E	x 6

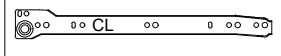

CL	x 1

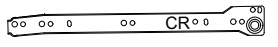

CR	x 1

STEP 4

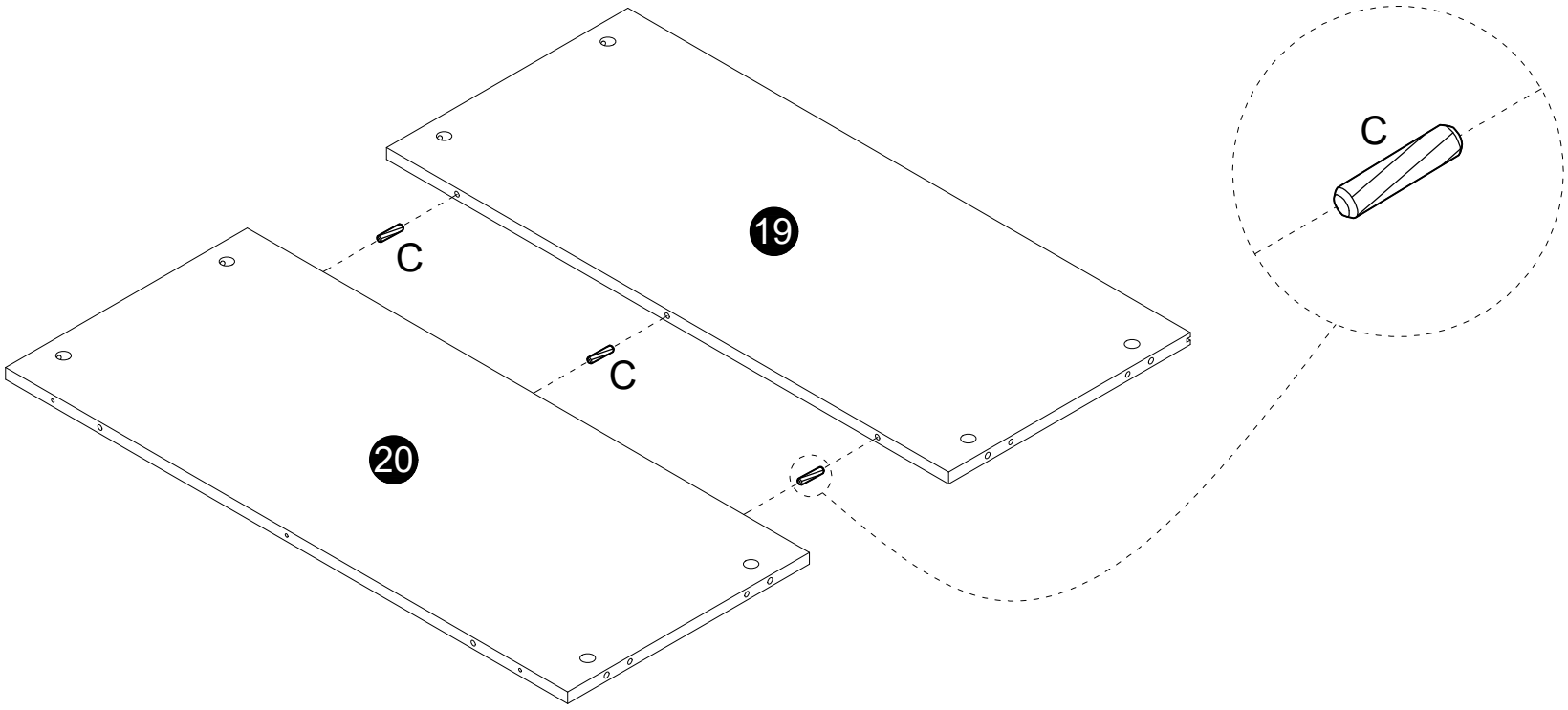

Ø6x30	
C	x 3

STEP 5

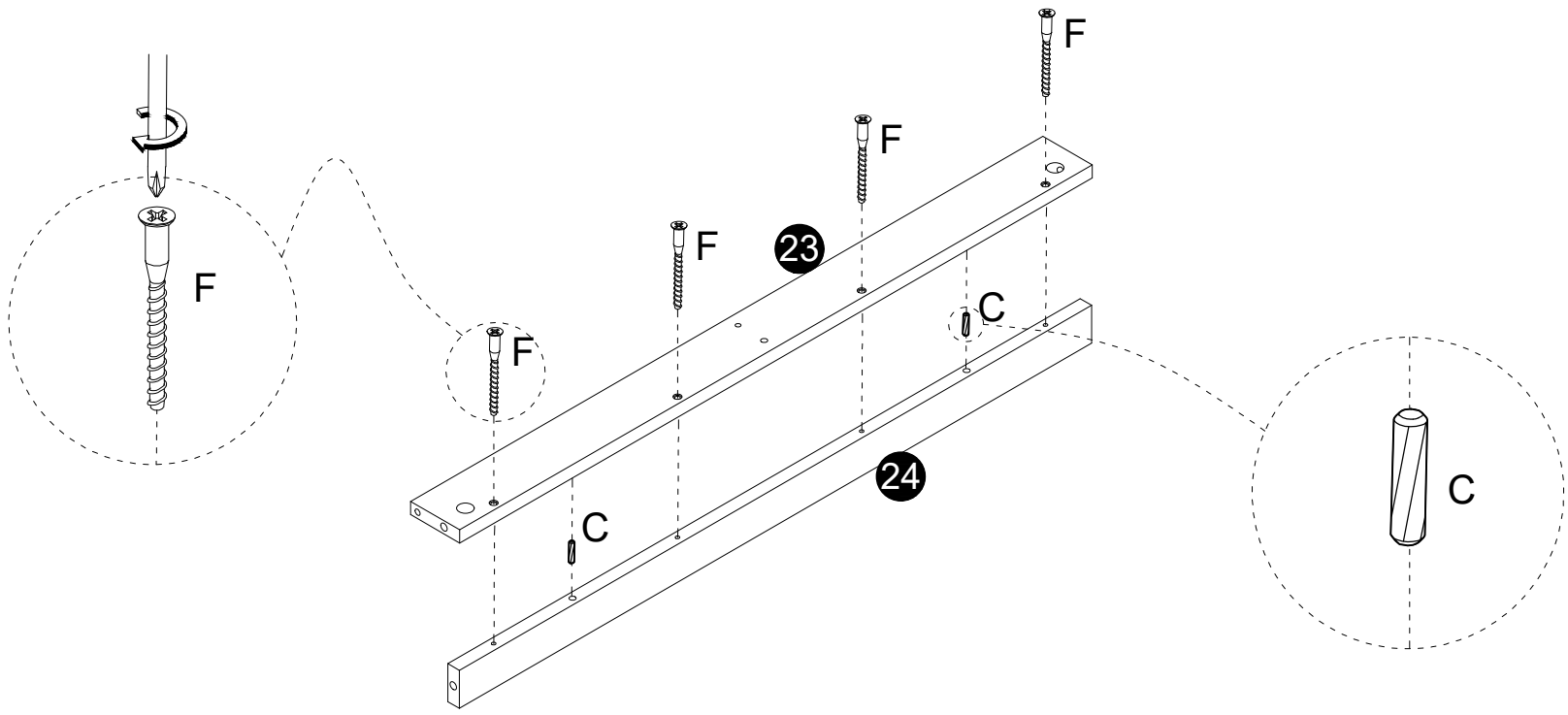
F
F
F
F
F
23
C
C
24
C

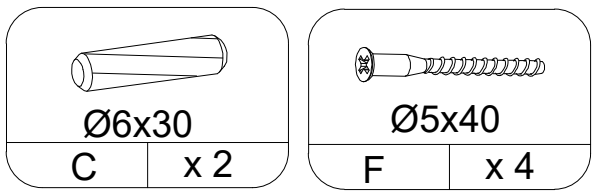
Ø6x30
C
x 2
Ø5x40
F
x 4

STEP 6

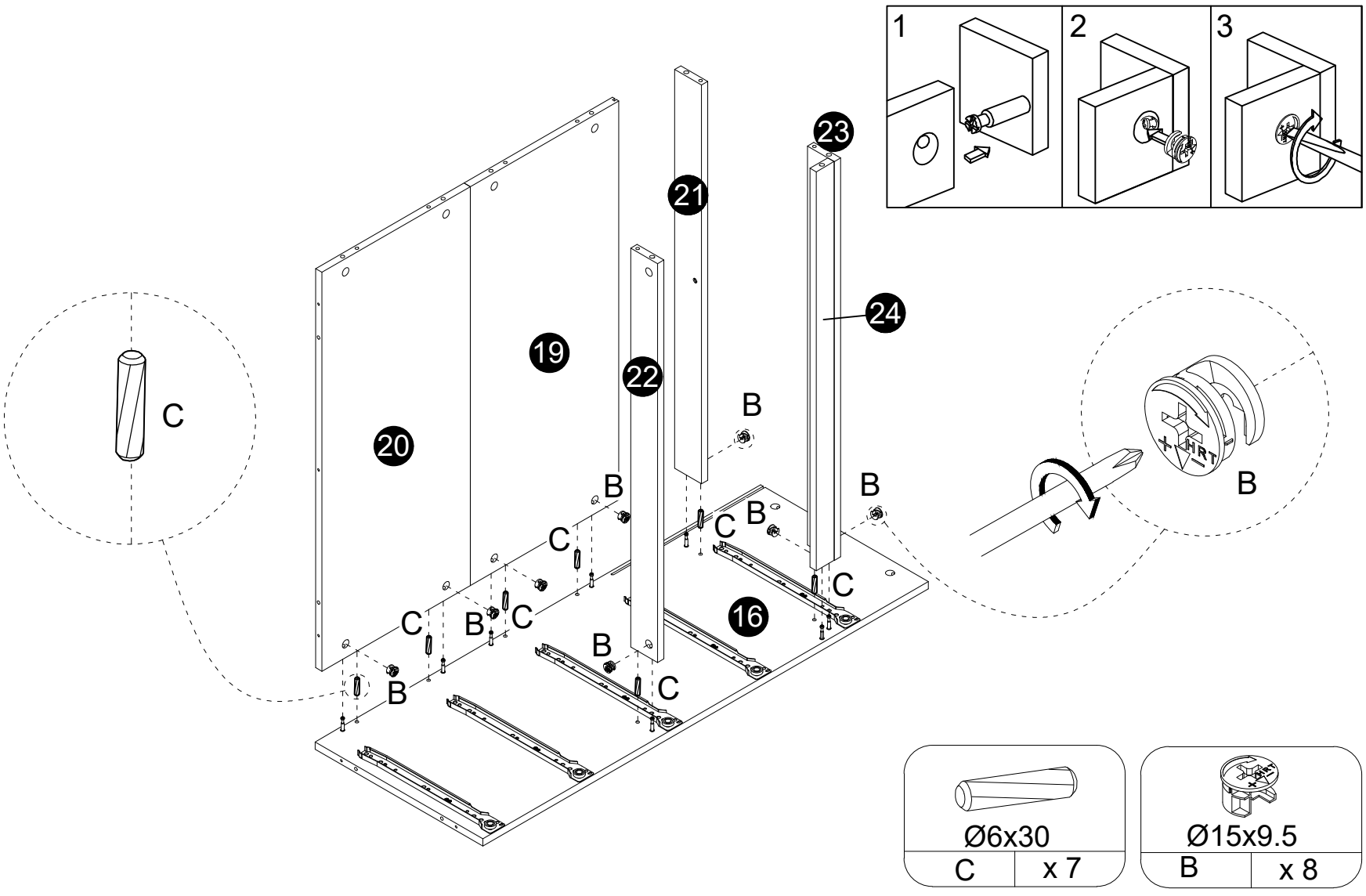
1
2
3
23
21
24
19
22
20
C
B
B
B
B
C
C
C
C
C
B
C
B
B
C
16
B
Ø6x30
C
x 7
Ø15x9.5
B
x 8

STEP 7

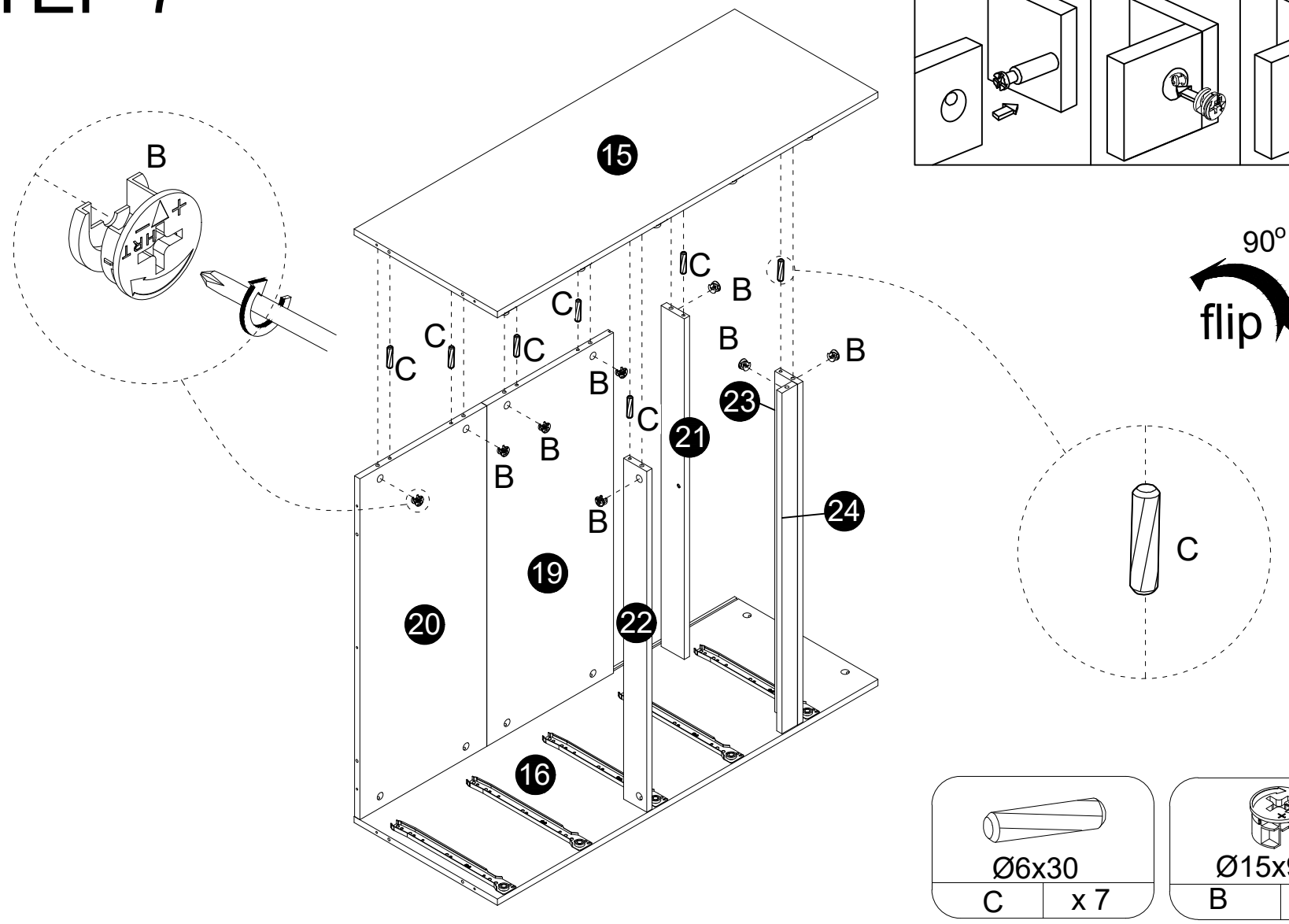

Ø6x30	
C	x 7

Ø15x9.5	
B	x 8

STEP 8

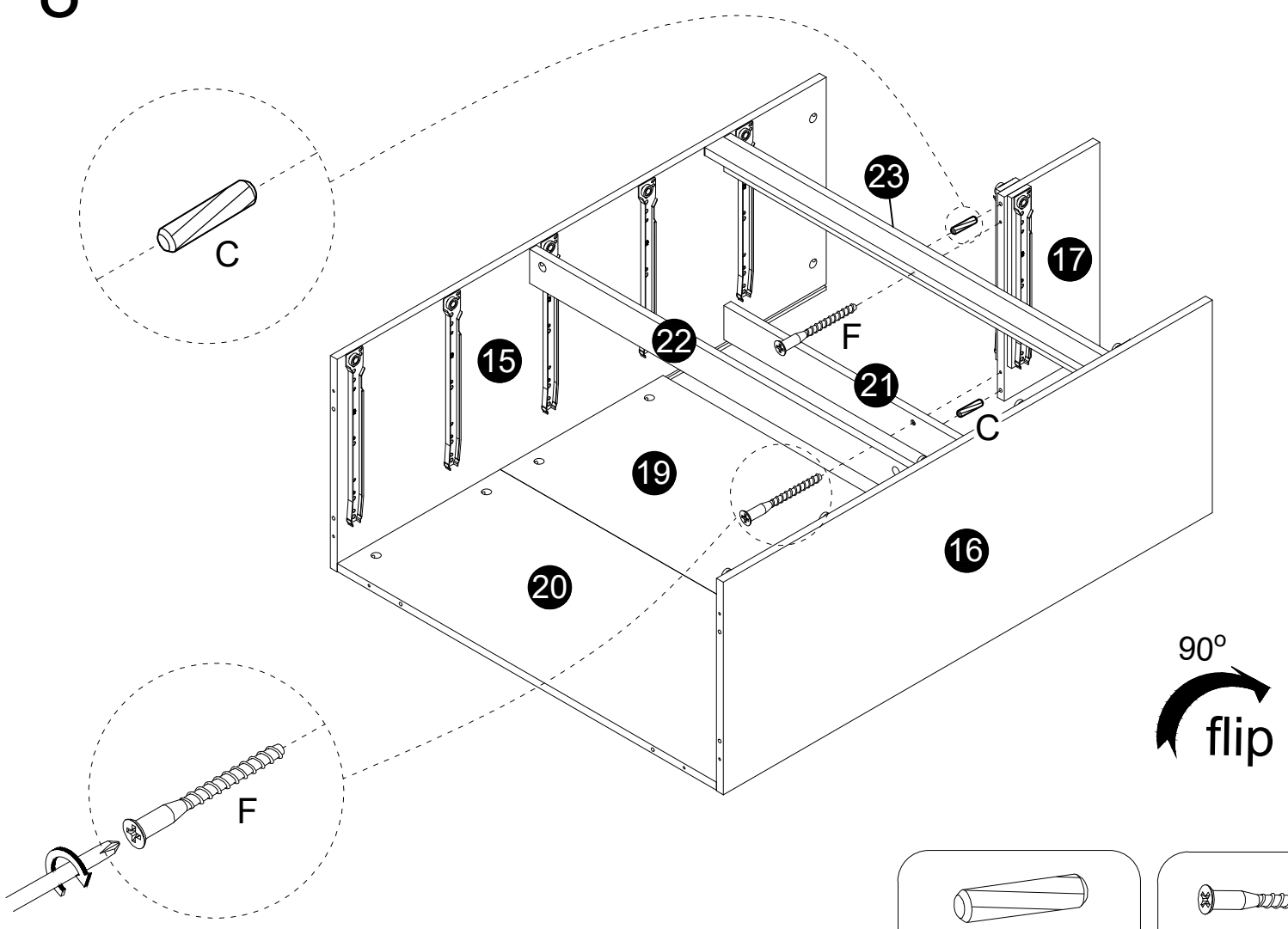

Ø6x30	
C	x 2

Ø5x40	
F	x 2

STEP 9

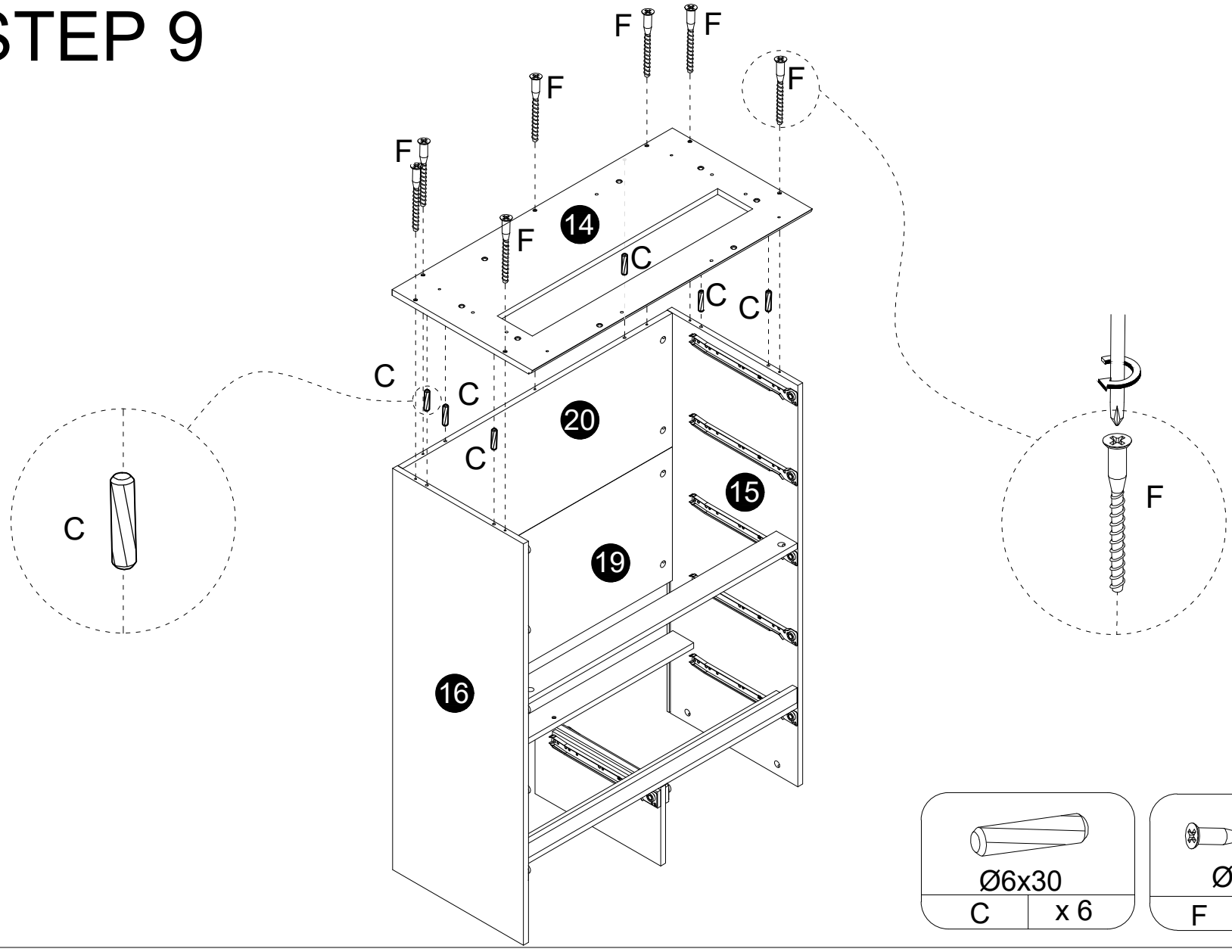

Ø6x30	
C	x 6

Ø5x40	
F	x 7

STEP 10

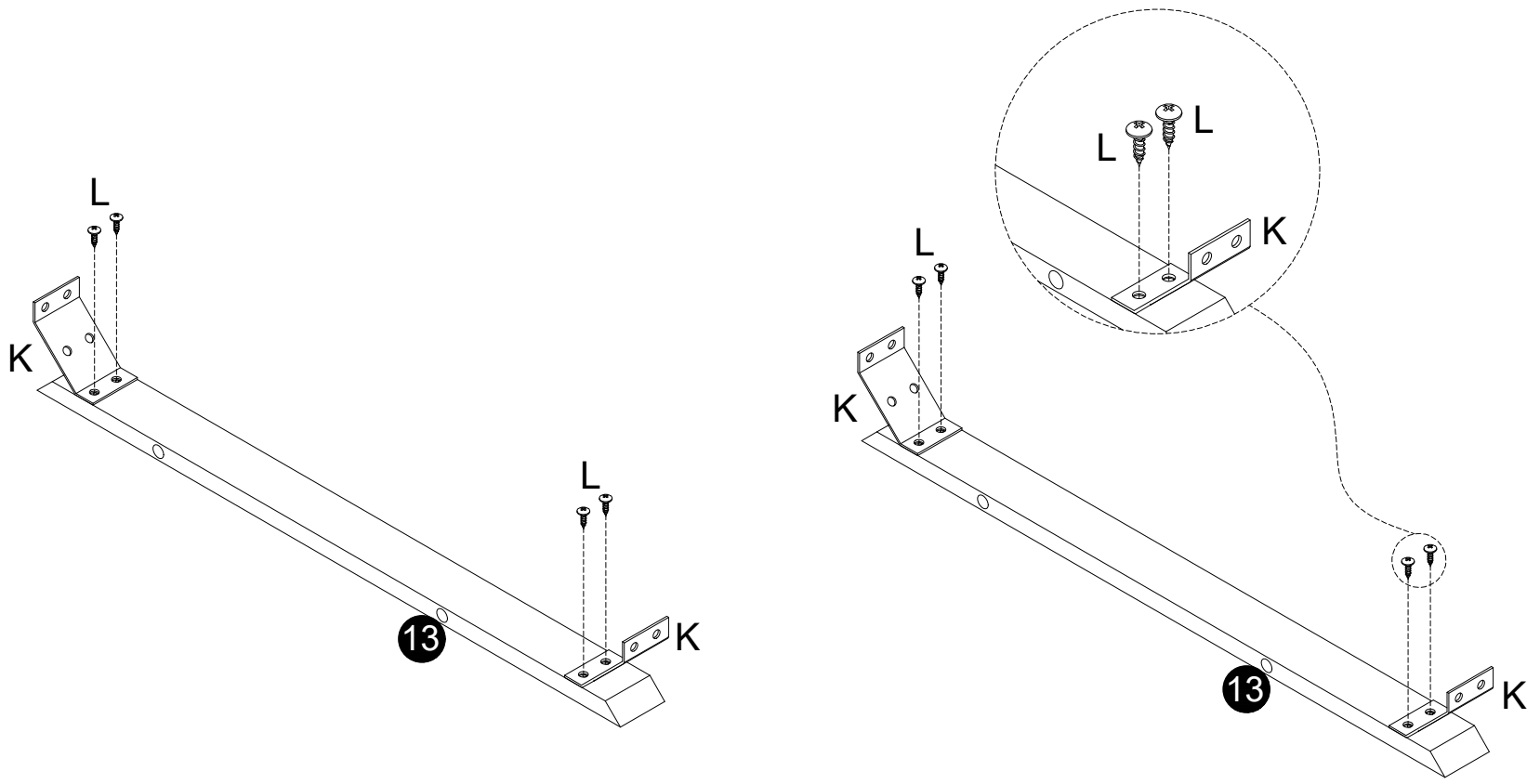

K	x 4

#10*15	
L	x 8

STEP 11
Note: Do not tighten the screws at this step.

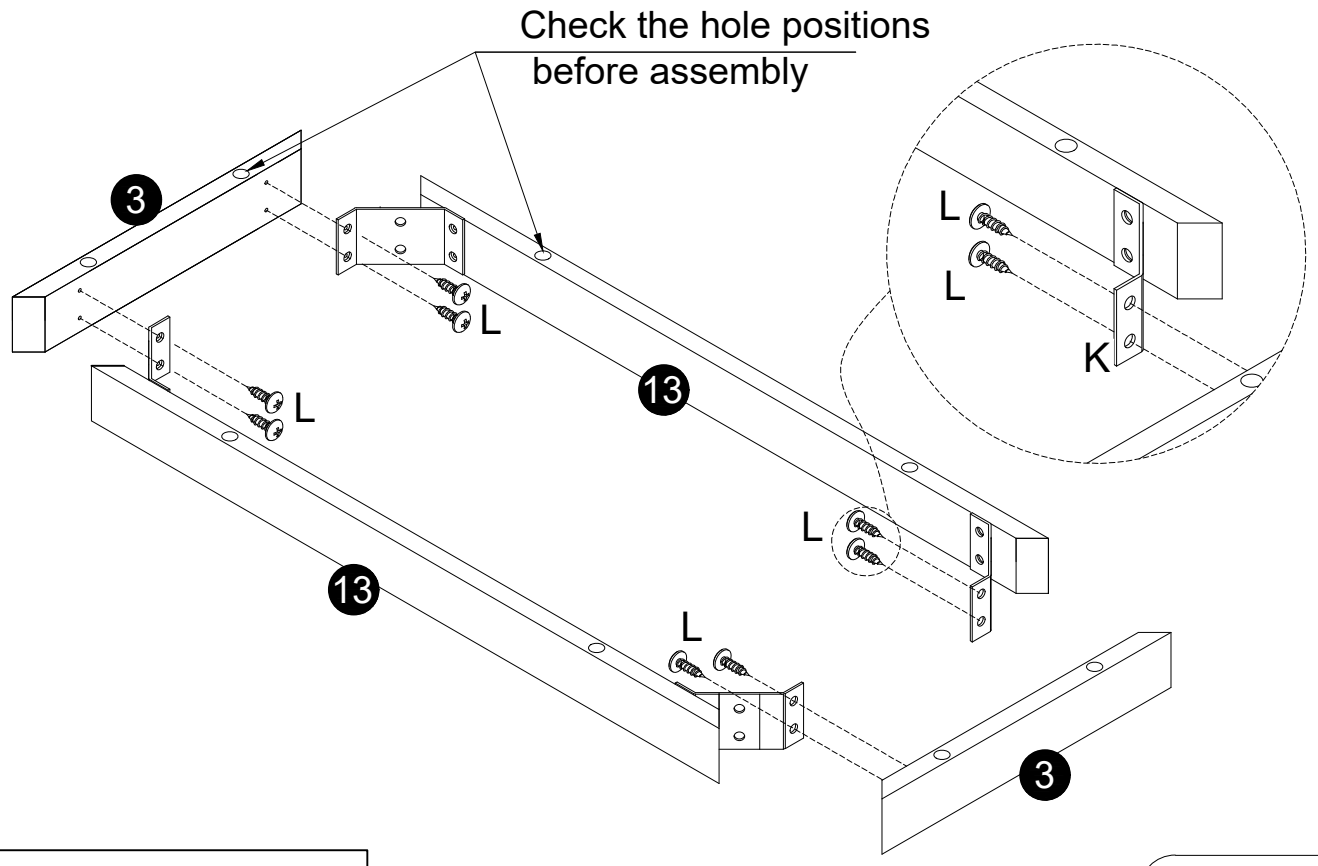

Edges must be correctly oriented to avoid reverse installation.

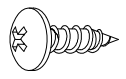

#10*15	
L	x 8

STEP 12 Tighten all screws and bolts.

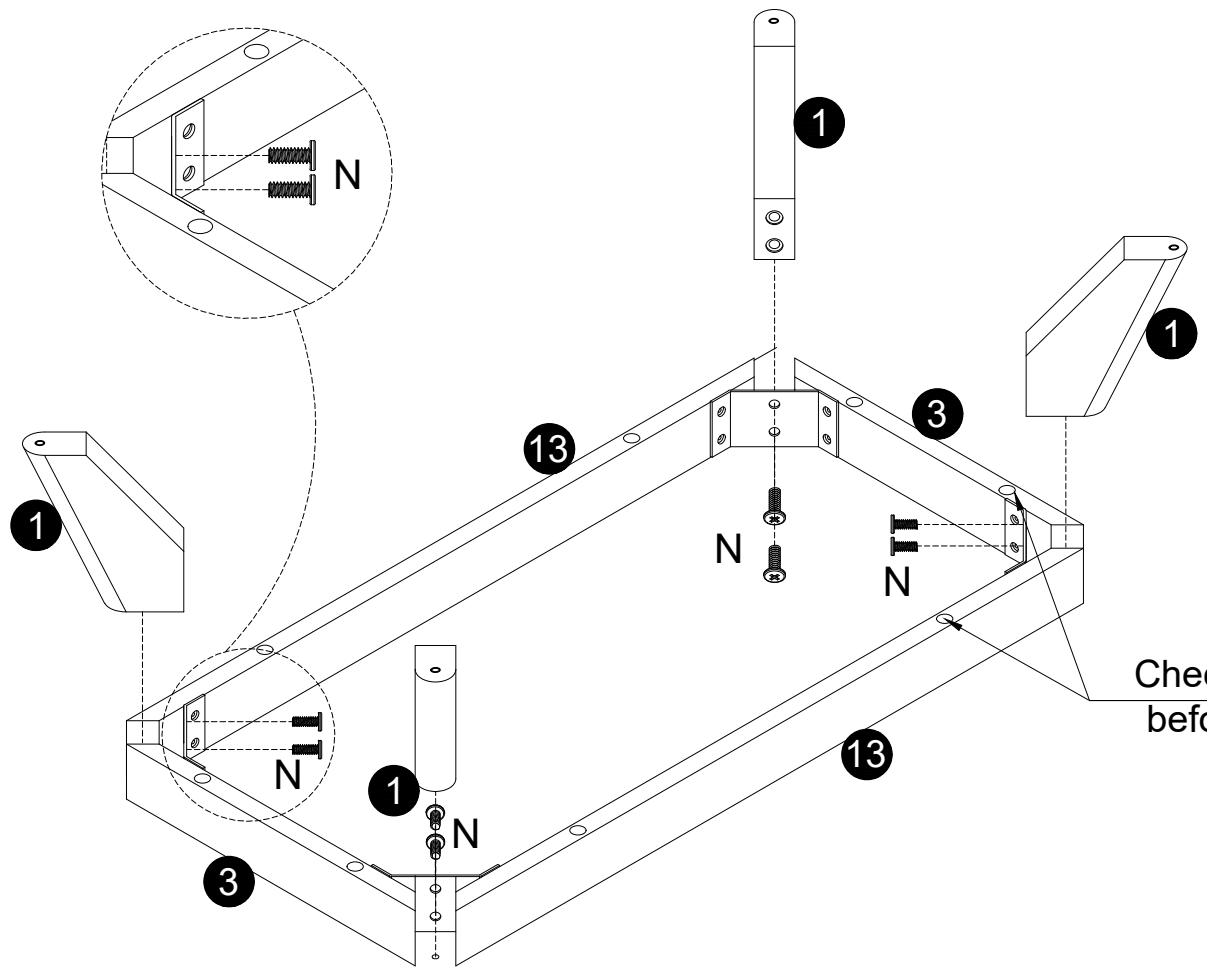

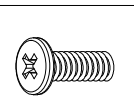

M6x20	
N	x 8

STEP 13

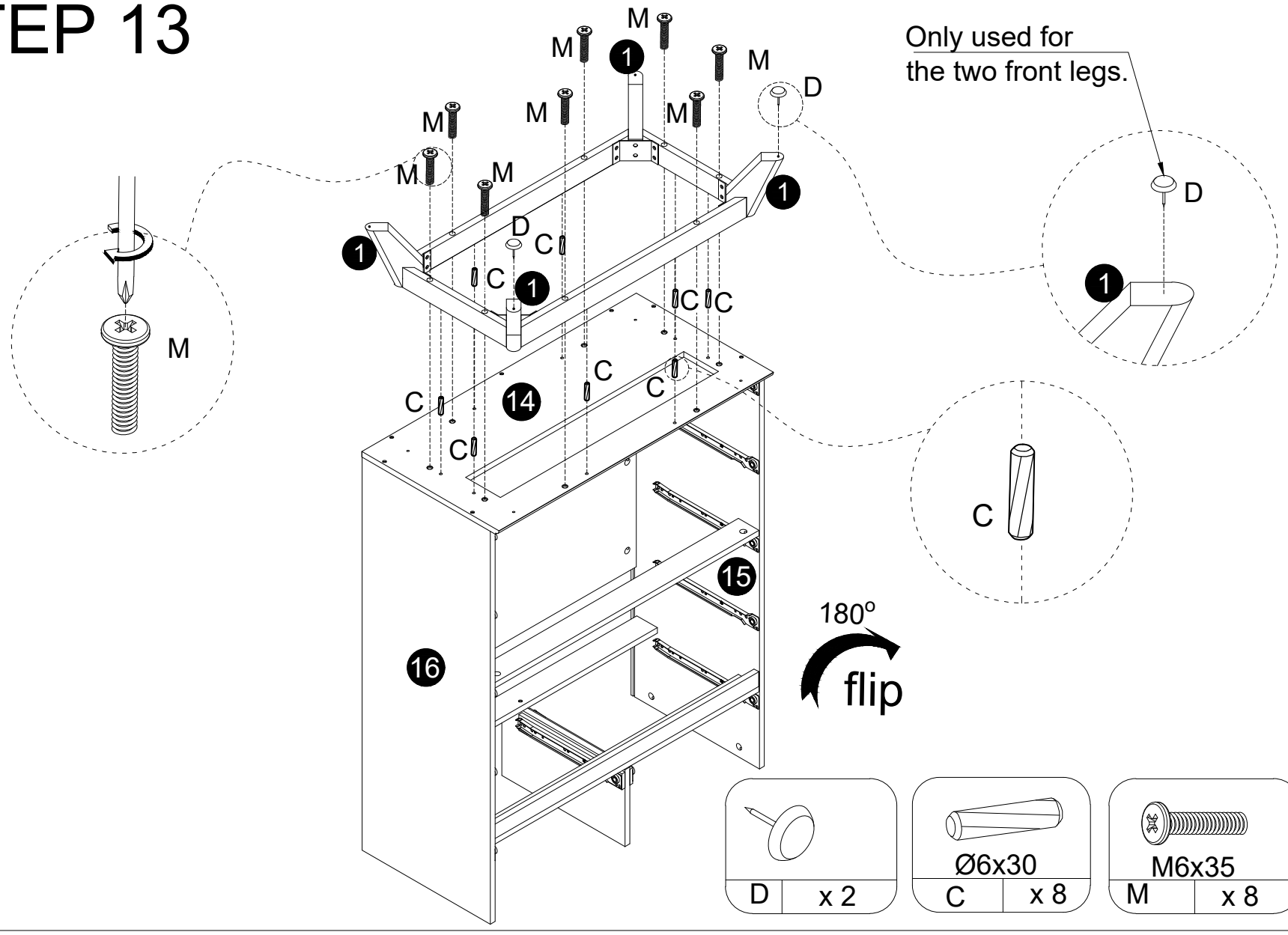

D	x 2

Ø6x30	
C	x 8

M6x35	
M	x 8

STEP 14

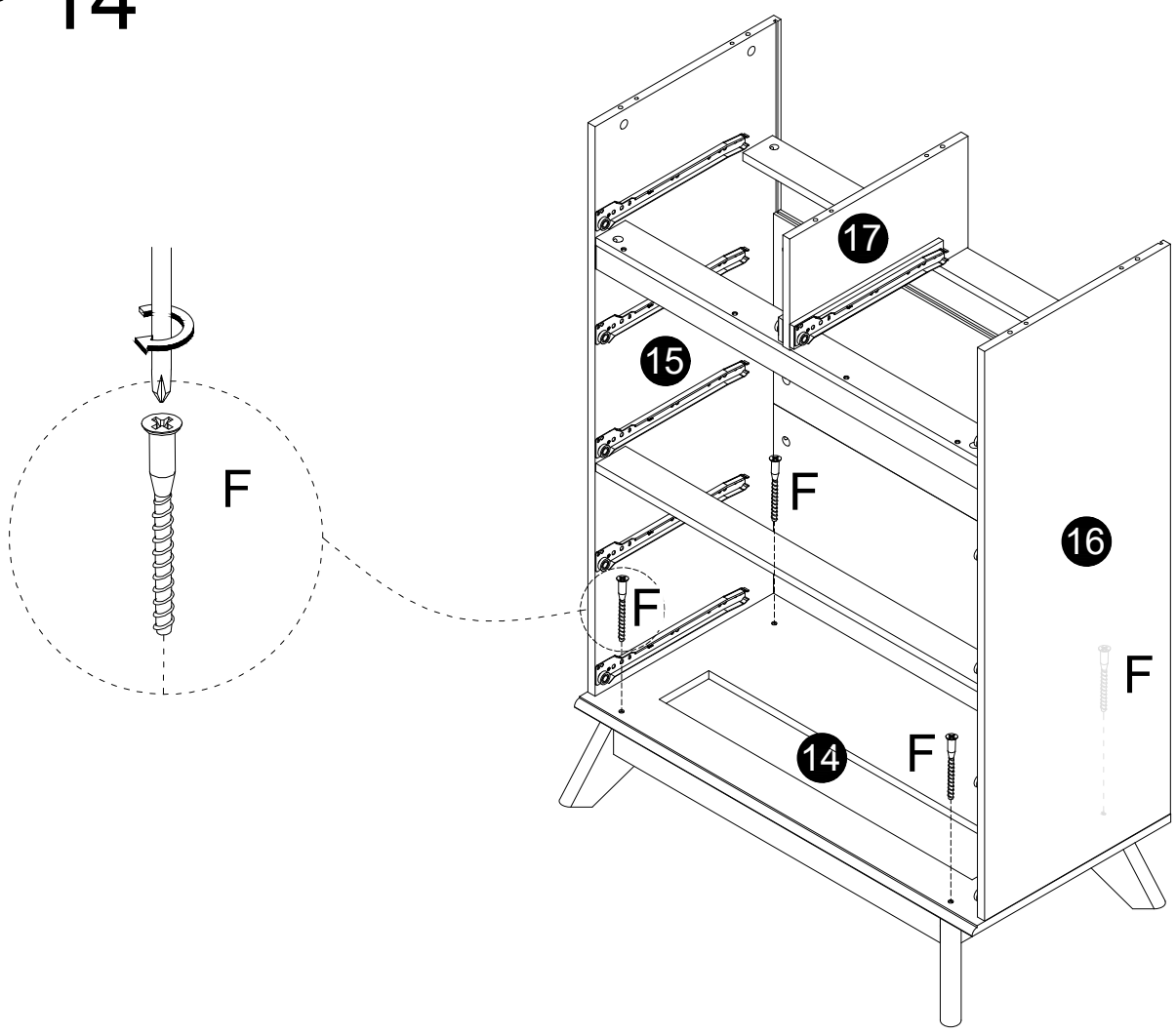

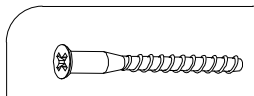

Ø5x40	
F	x 4

STEP 15

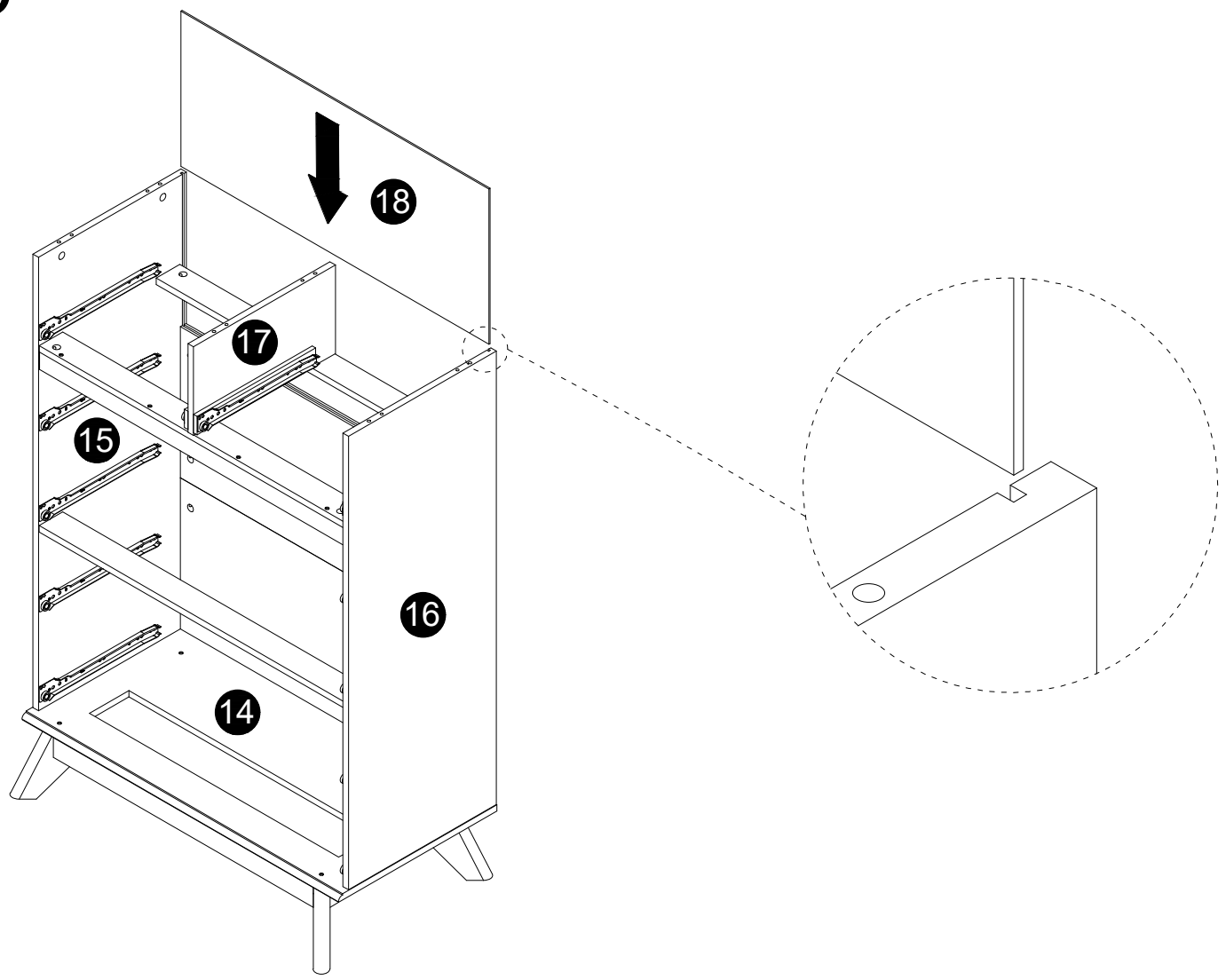

STEP 16

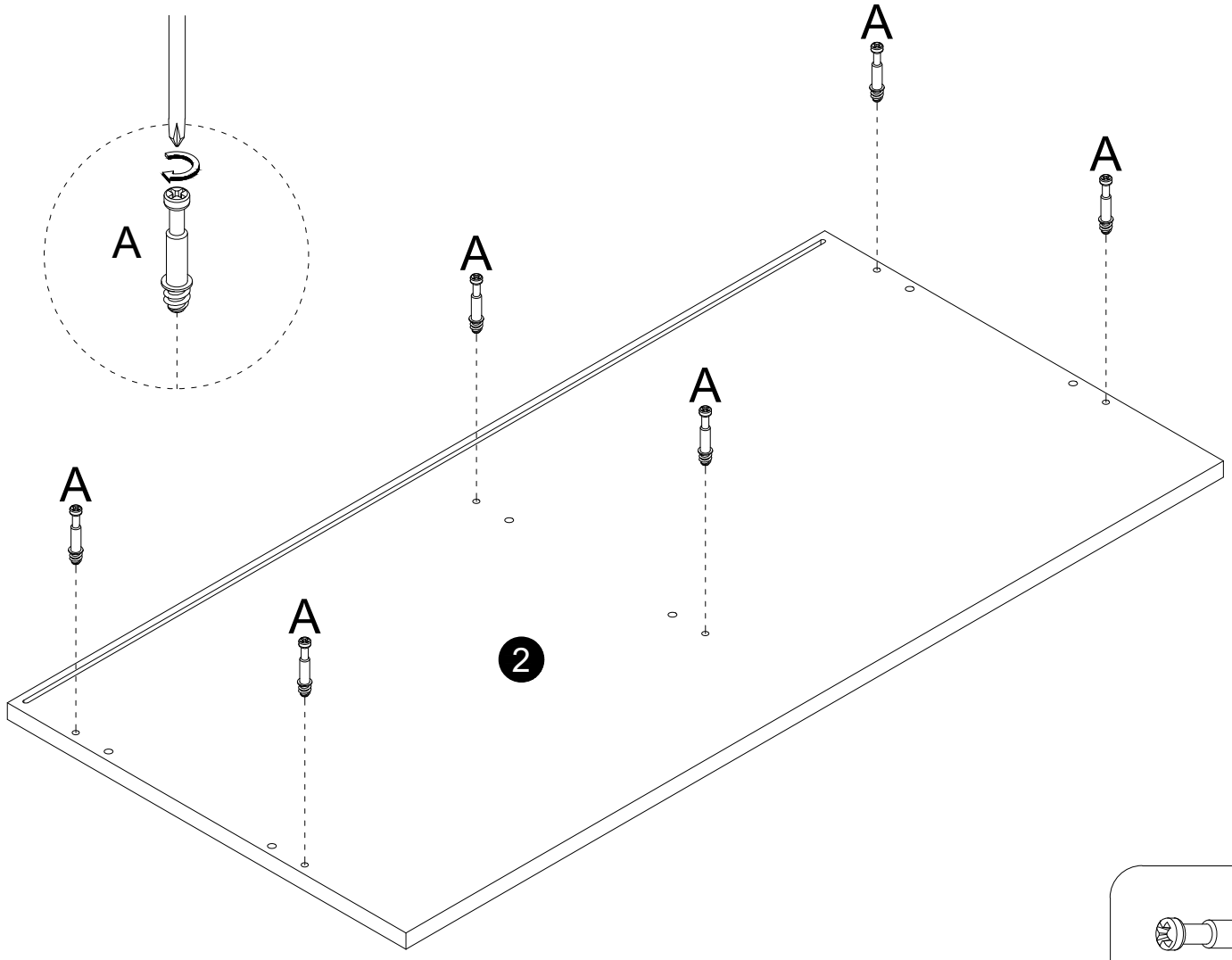

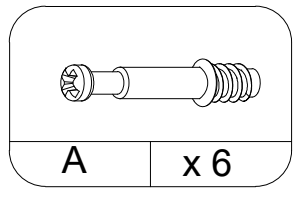

STEP 17

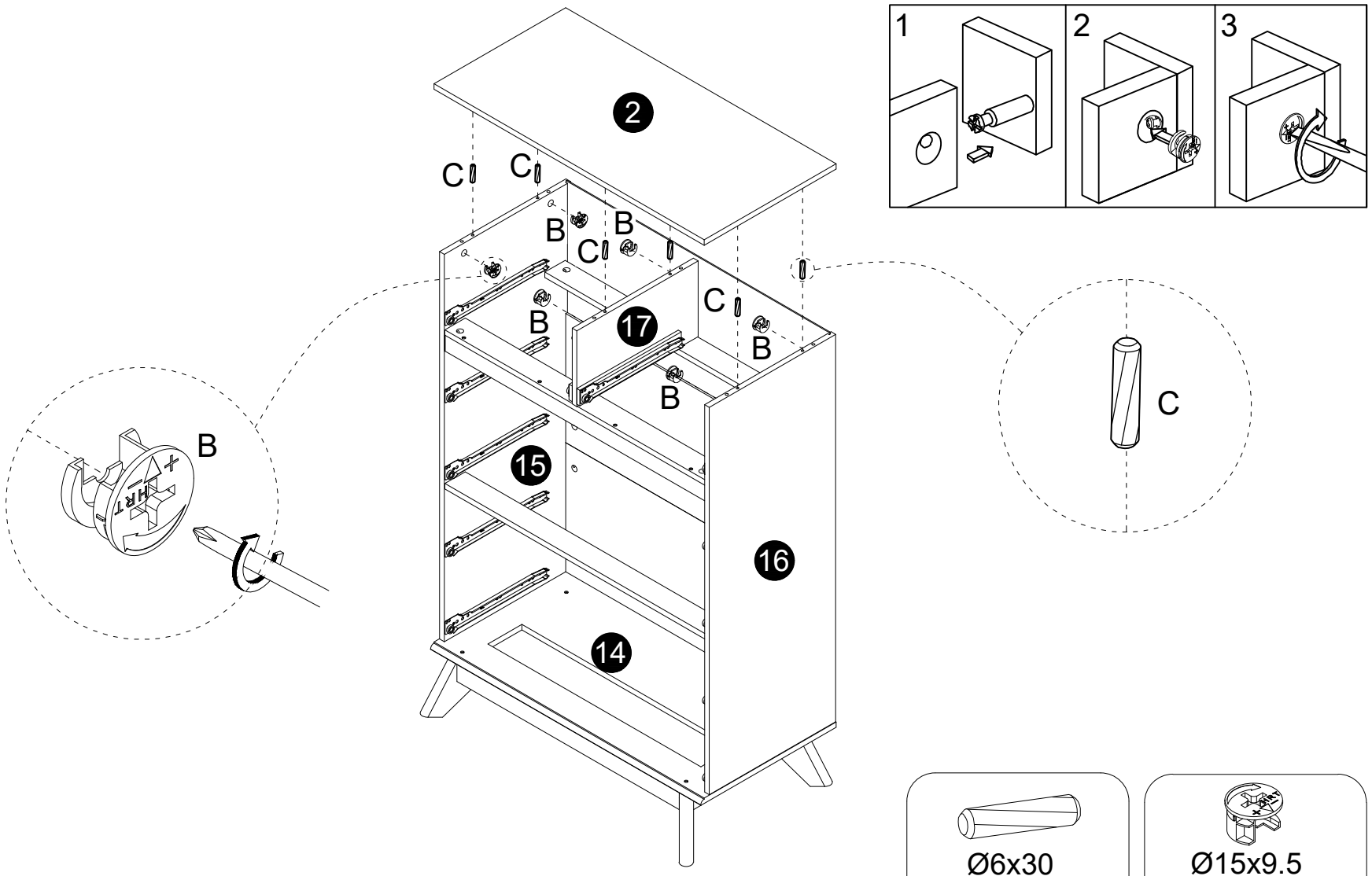

Ø6x30	
C	x 6

Ø15x9.5	
B	x 6

STEP 18

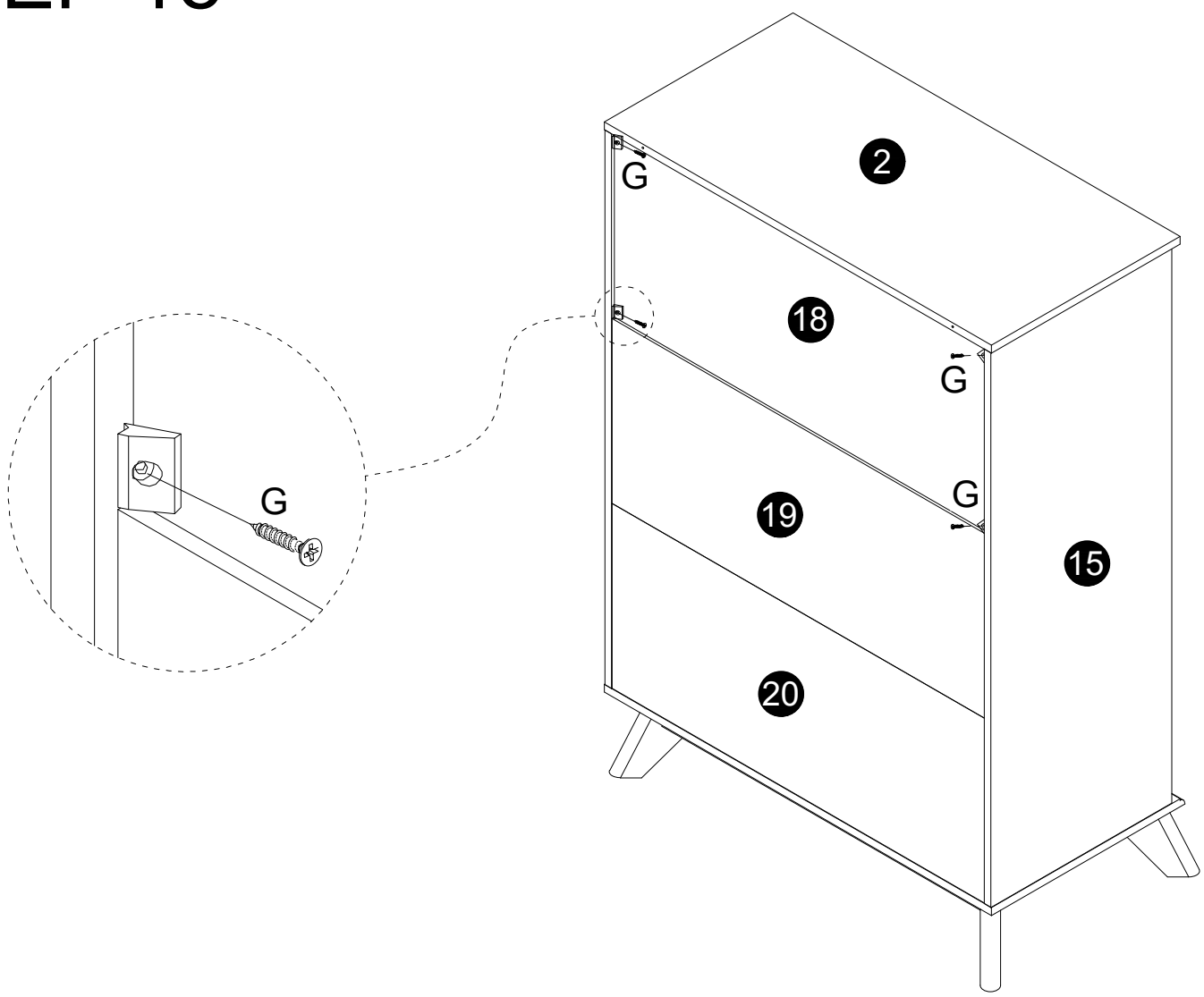

Ø3x17	
G	x 4

STEP 19

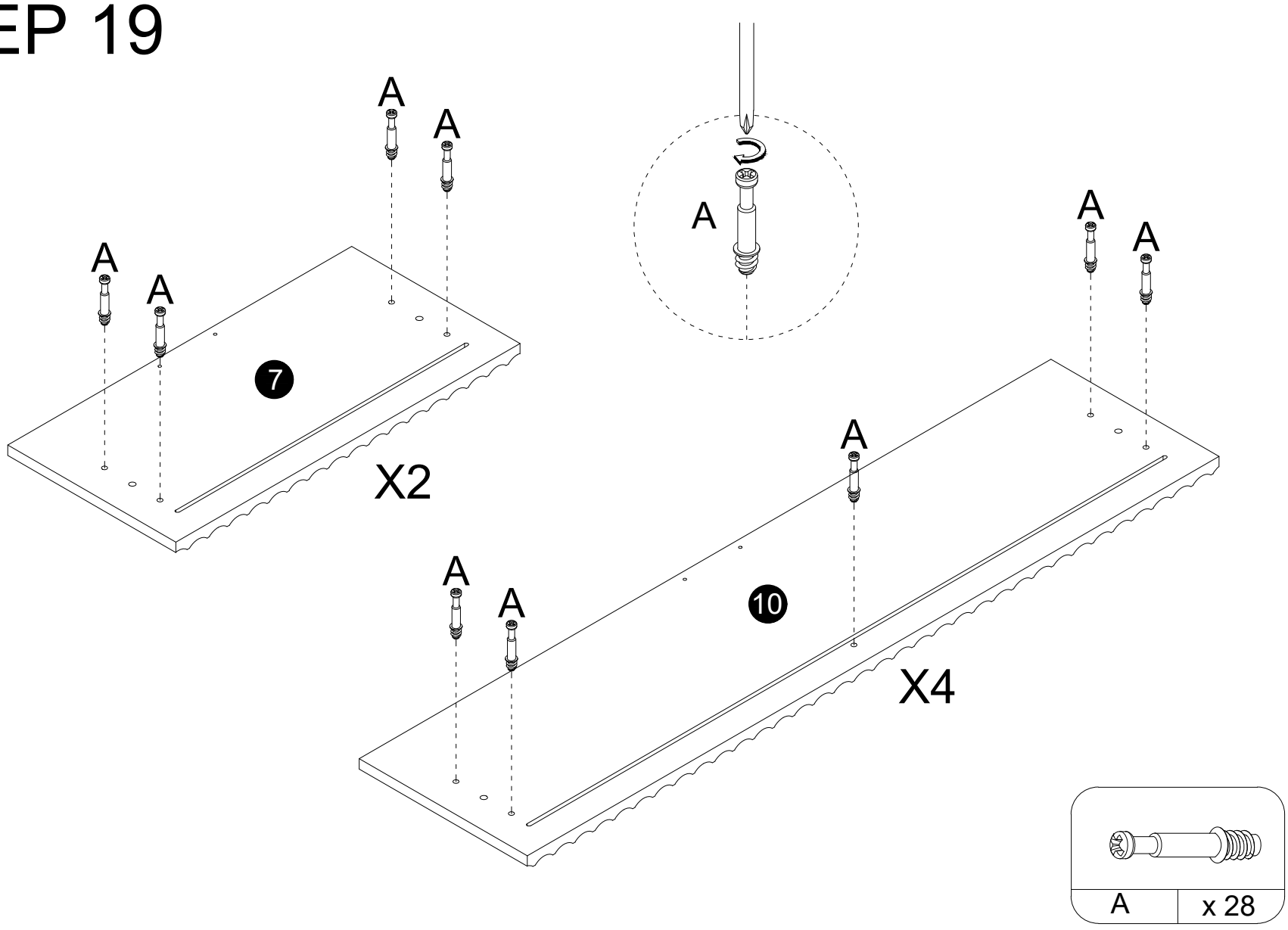

STEP 20

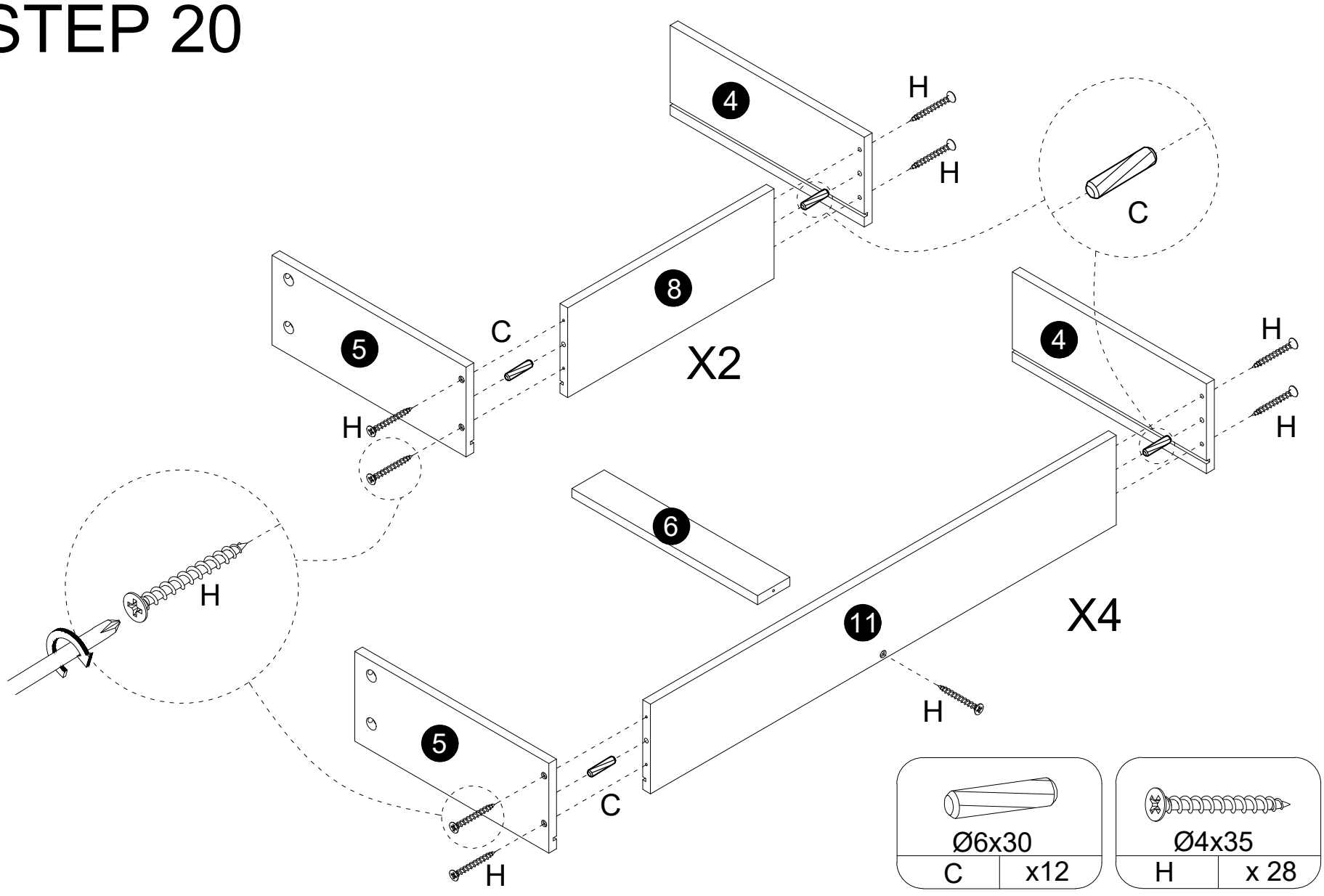

STEP 21

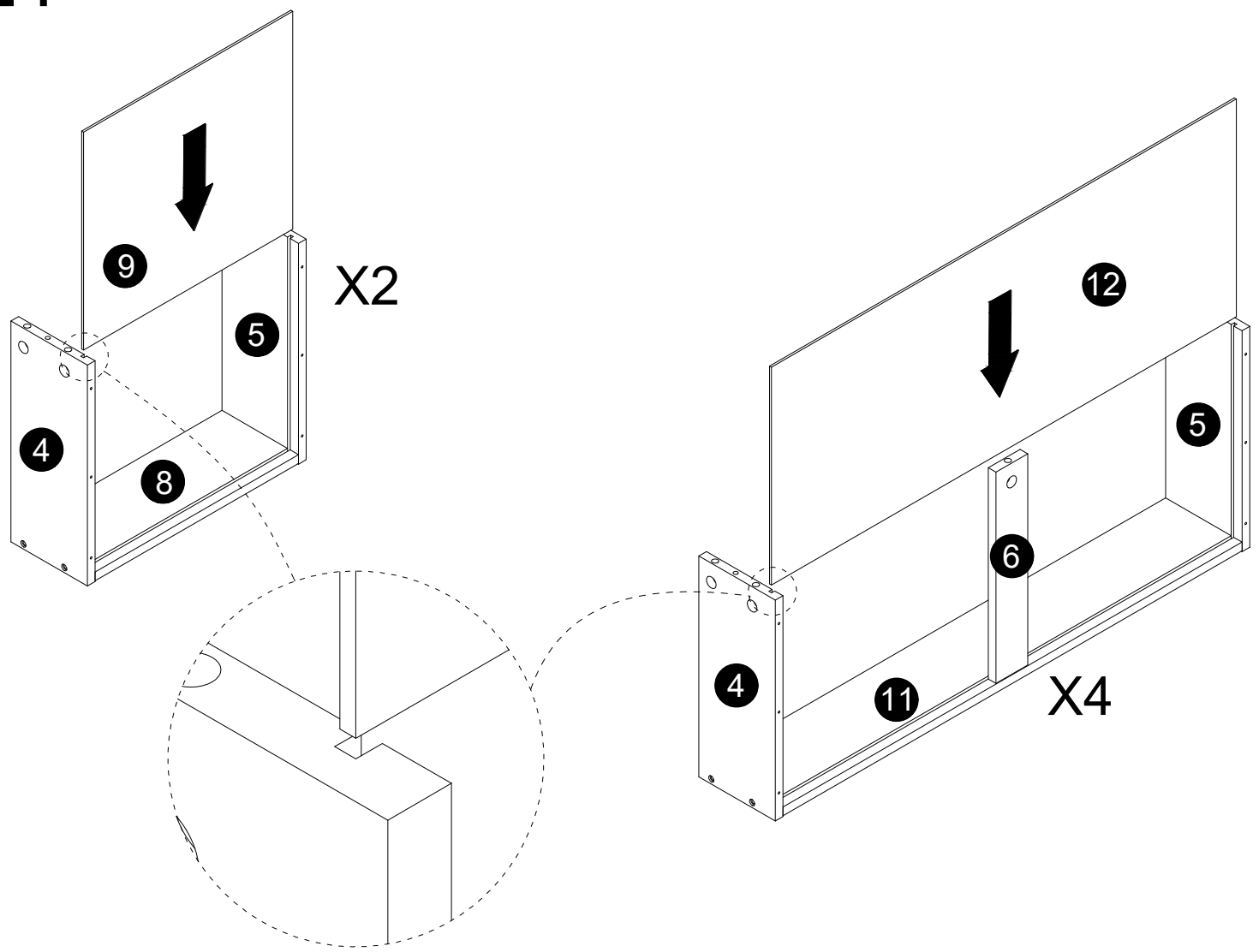

STEP 22

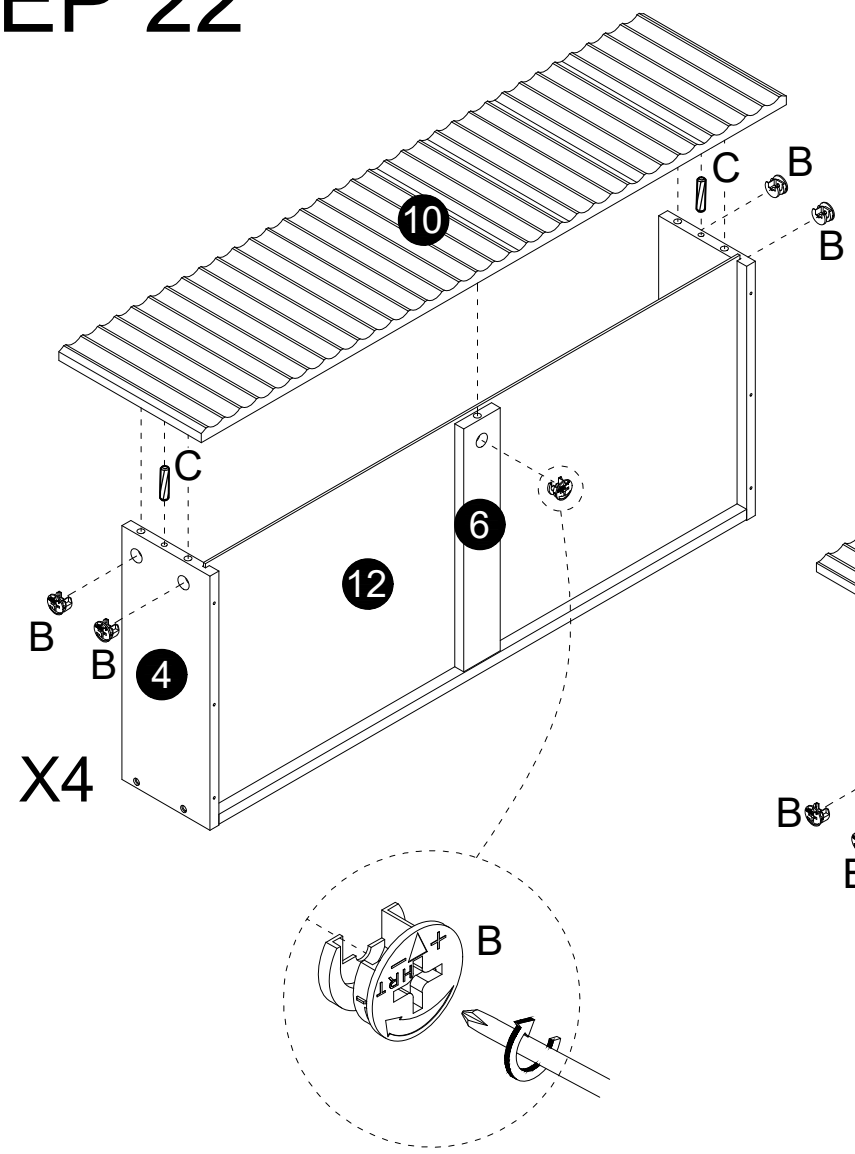

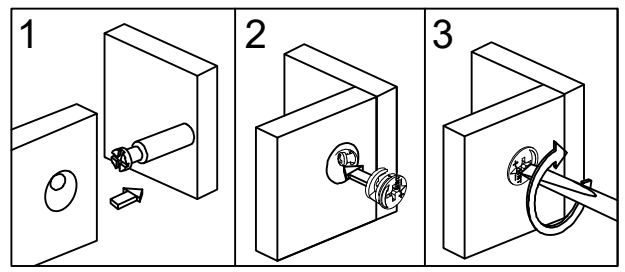

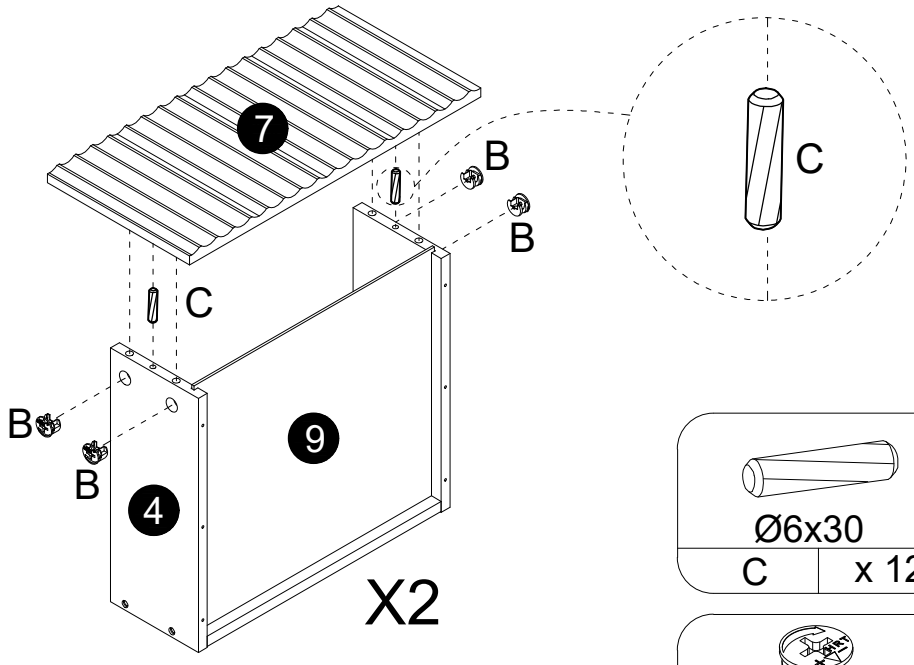

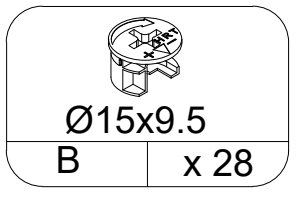

STEP 23

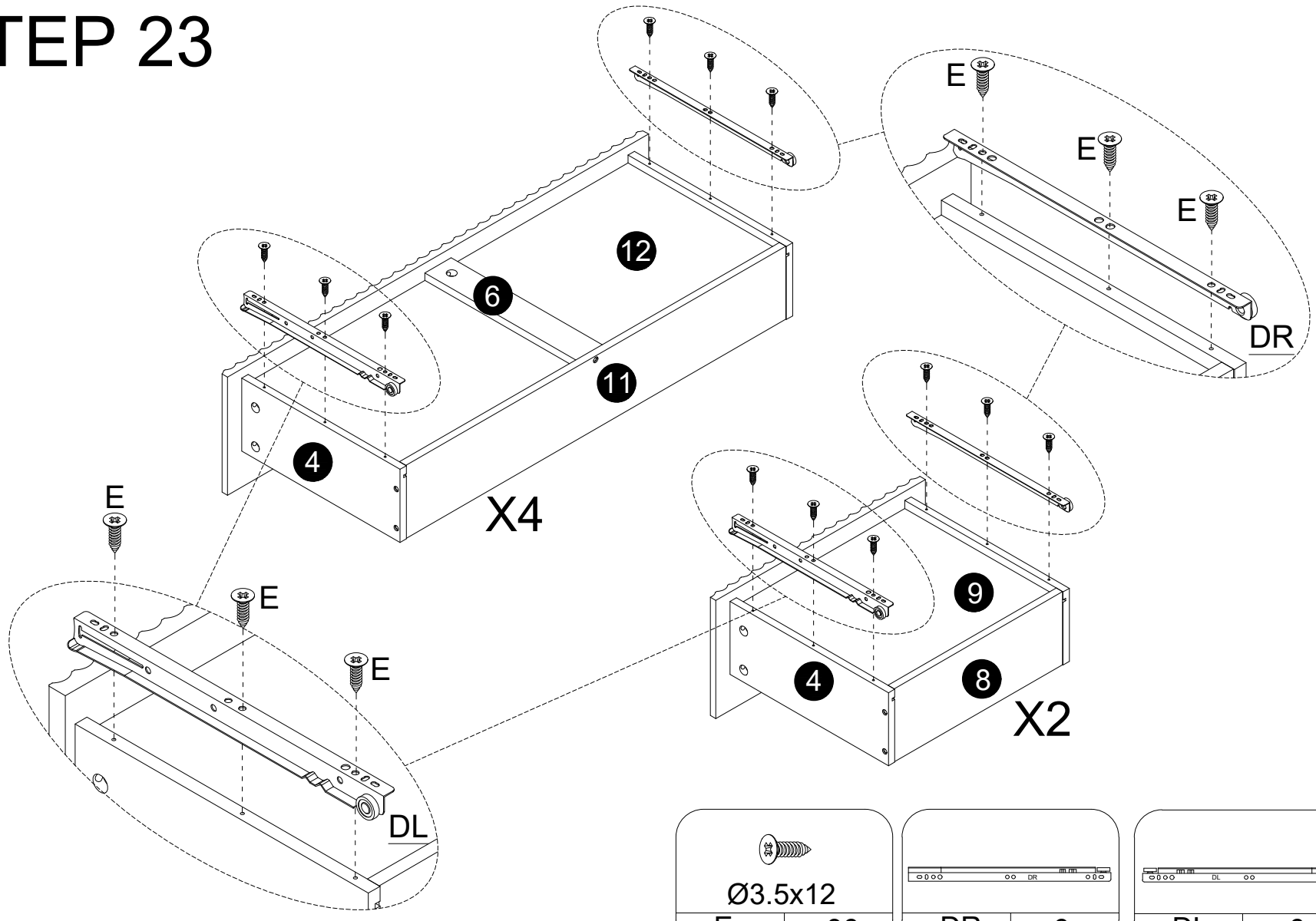

Ø3.5x12	
E	x 36

DR	
DR	x 6

DL	
DL	x 6

STEP 24

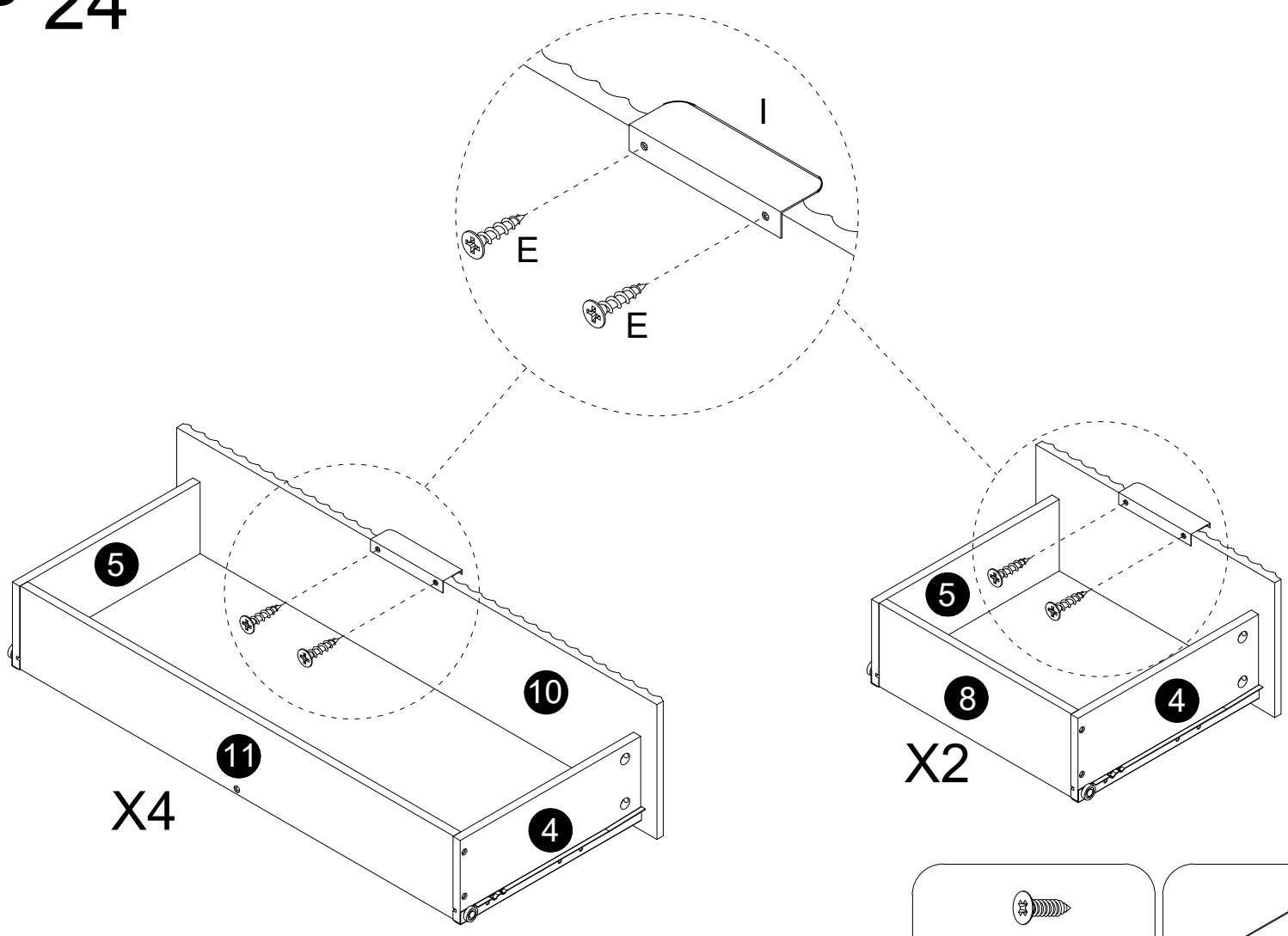

Ø3.5x12	
E	x12

I	
I	x 6

STEP 25

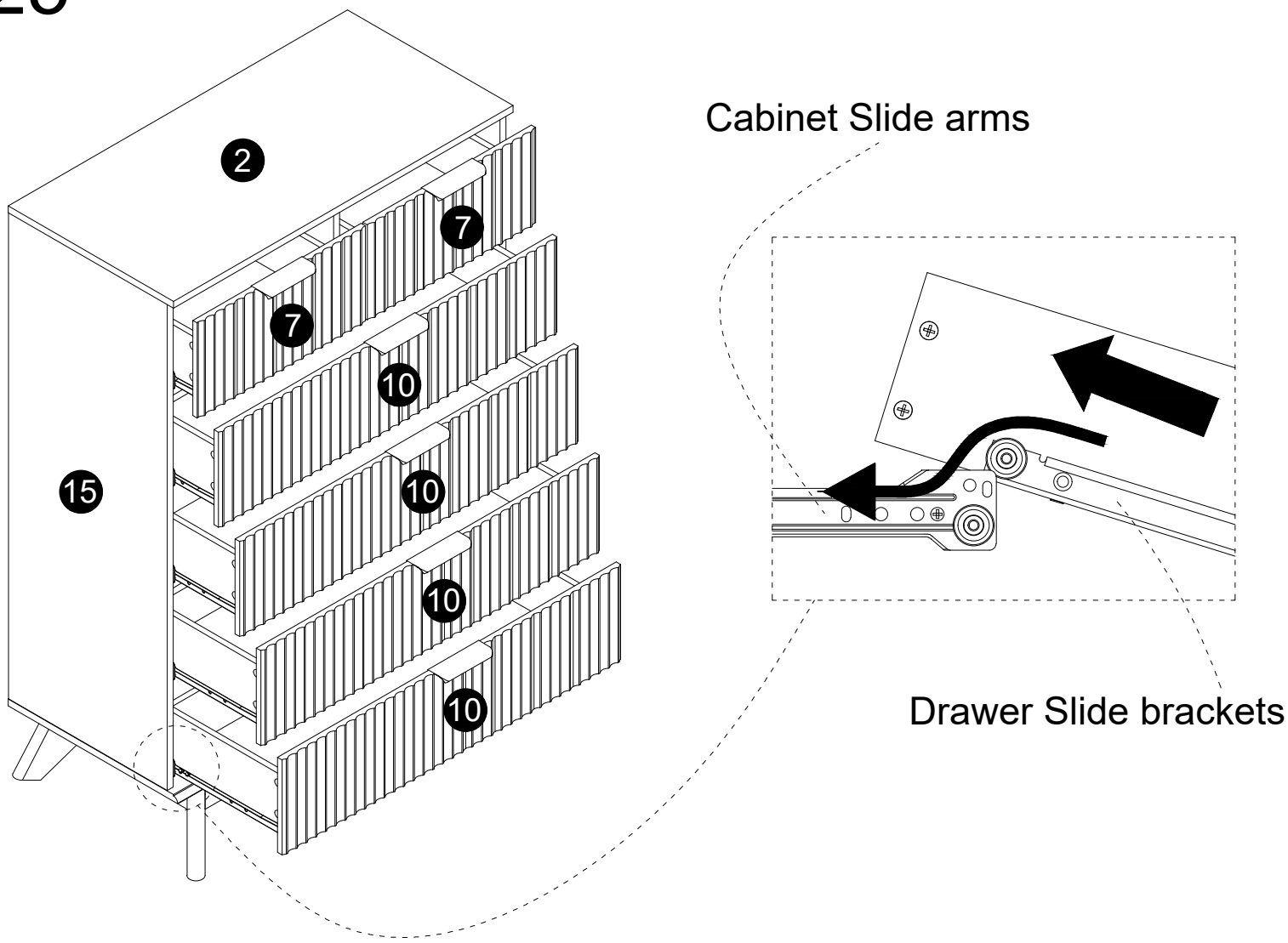

STEP 26

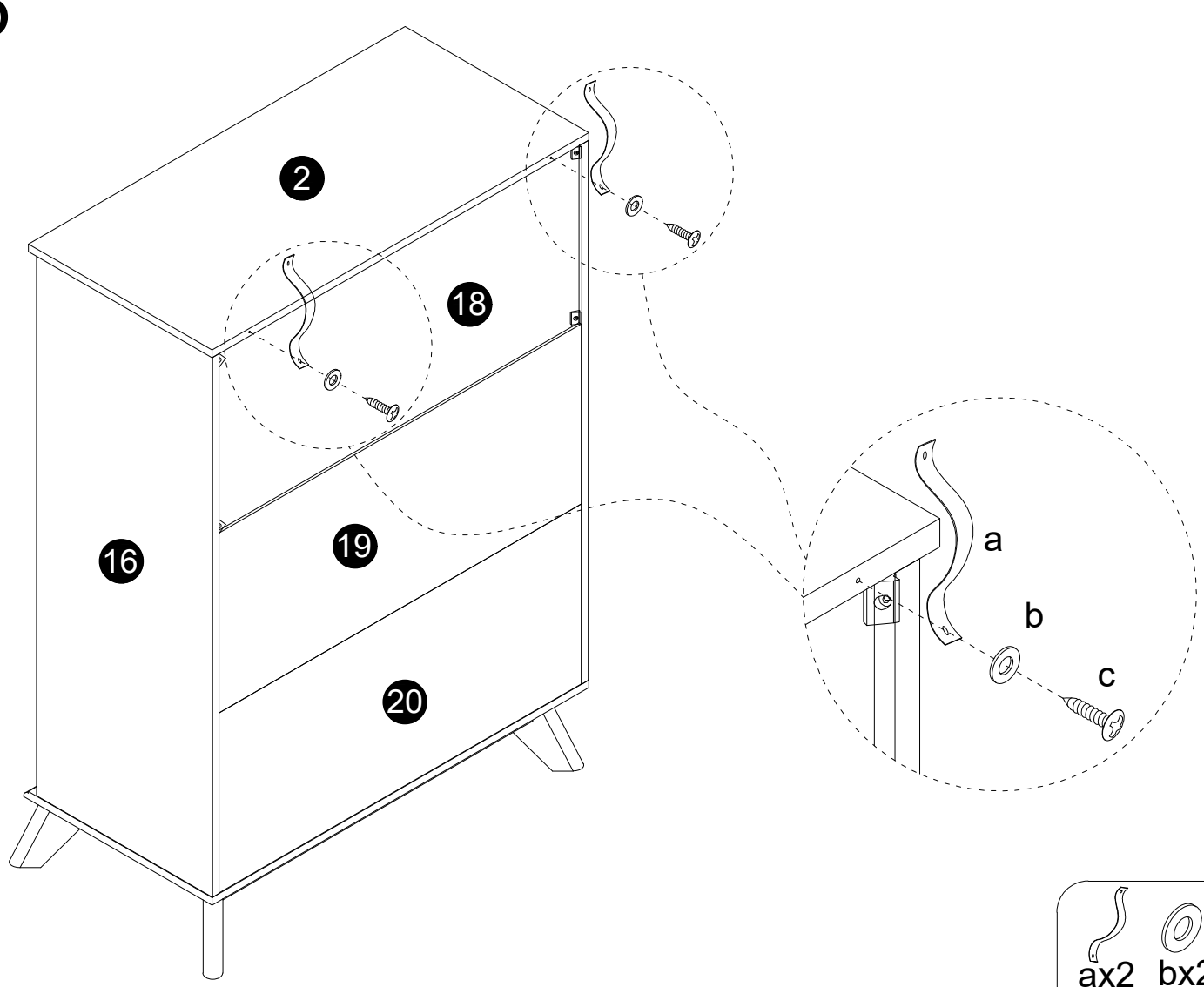

STEP 27

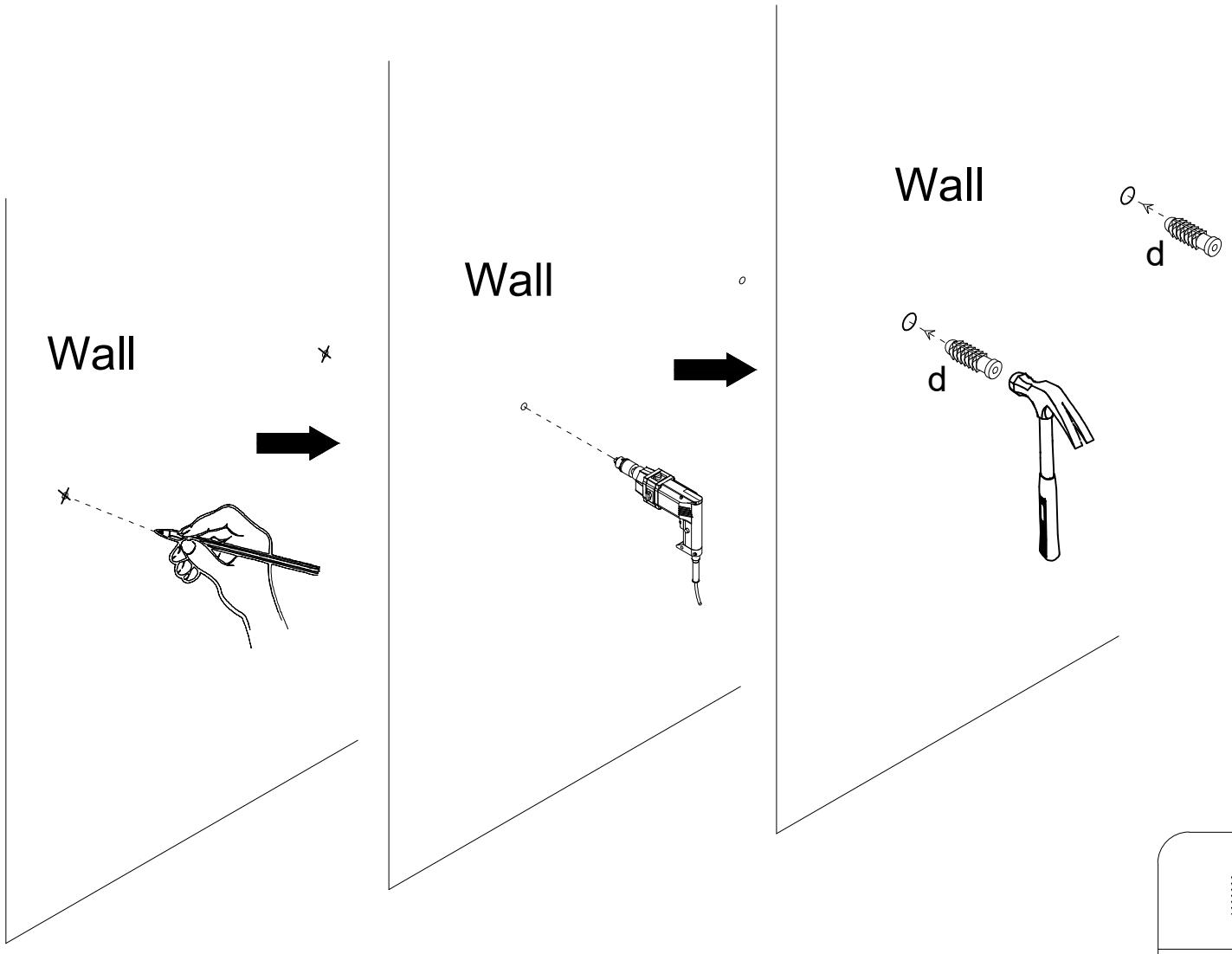

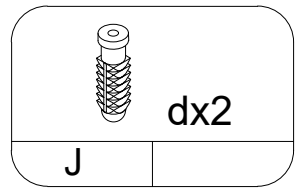

STEP 28

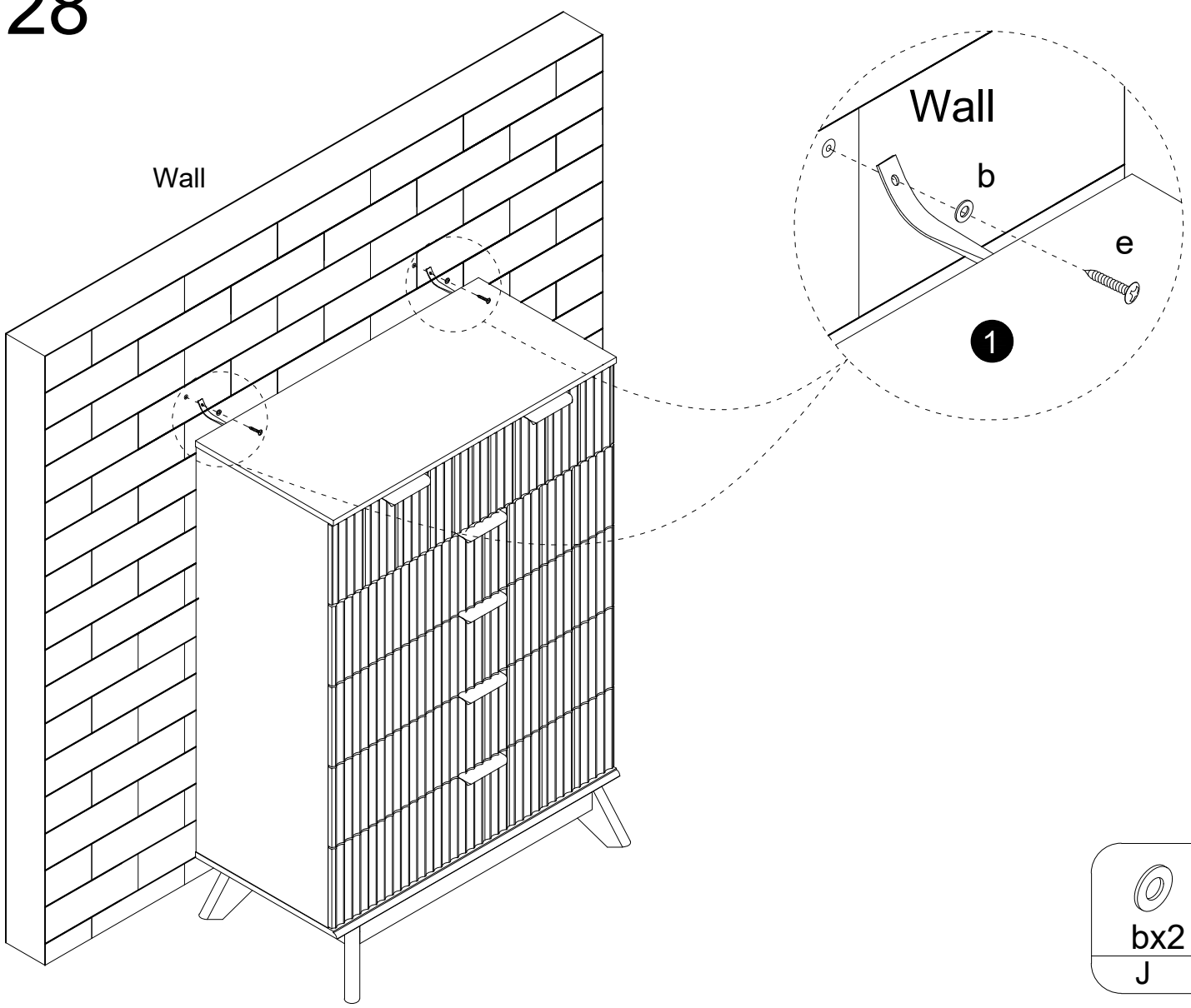

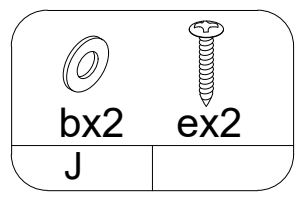

FURNITURE CARE AND MAINTENANCE

Medium - Density Fiberboard and Particle board

Thank you for your purchase. We want your item to last as long as possible. To ensure the product gives you years of service, please refer to this care and maintenance guide.



MAINTENANCE

· Tighten all bolts and screws again within the first 2 weeks of assembly
· Check the tightness of all bolts every 2 months, tighten them if necessary



CLEANING

· Clean the surface of the MDF (medium - density fiberboard) or PB (particle board) with a lightly dampened cloth.

· Small amount of mild soap can be used if necessary

- **Dry the surface immediately after cleaning.**

⚠ DO NOT use bleach or alcohol detergent to clean the surface.
⚠ DO NOT apply wood treatment on parts made with MDF and PB.
Medium - density fiberboard and Particle board will swell and distort when suffer from water damage.
Make sure to dry the furniture immediately after cleaning