Installation & Assembly

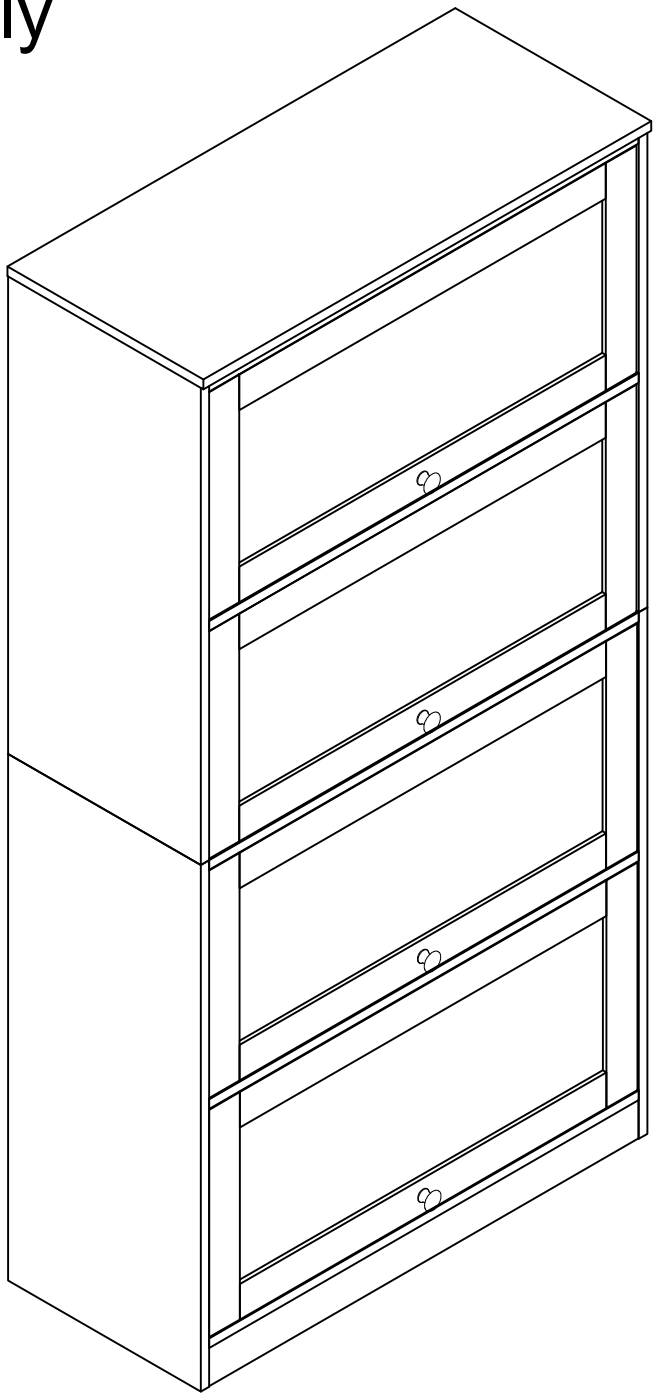

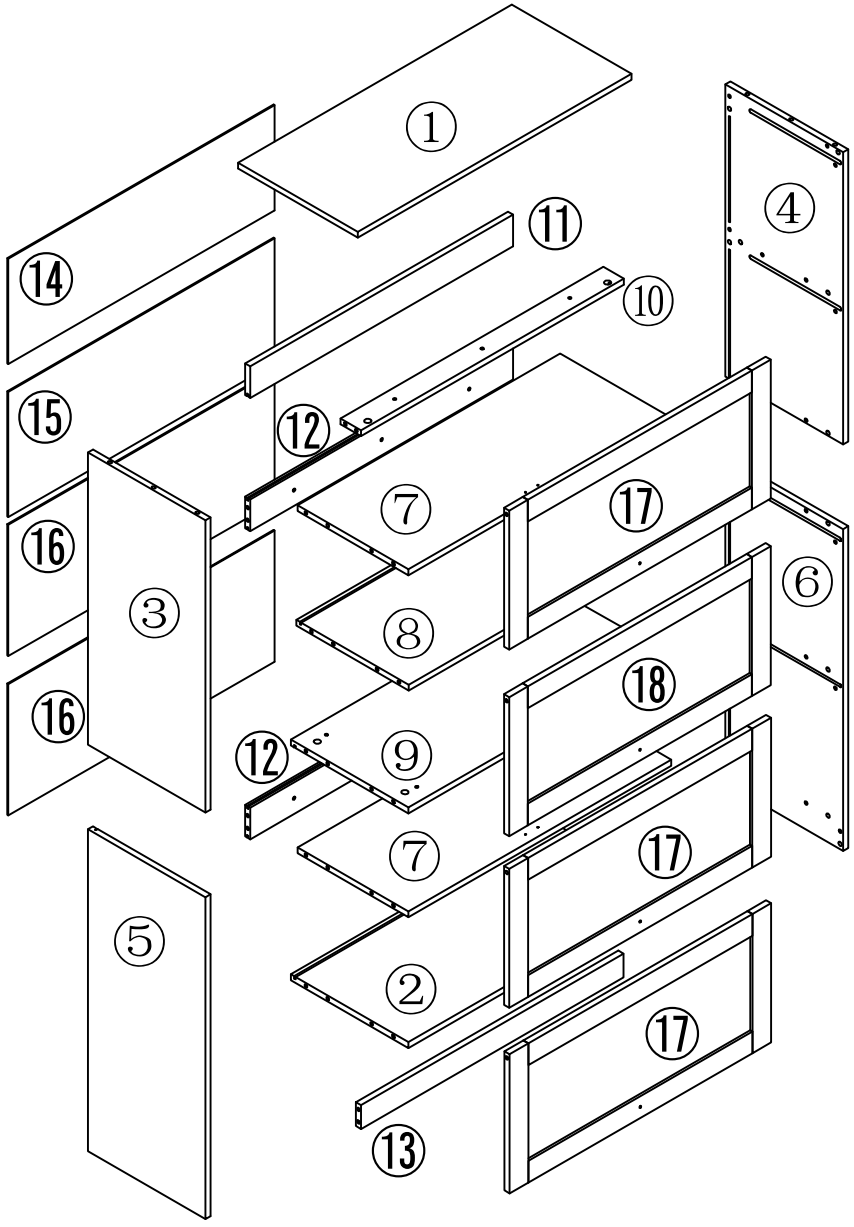

N 3*12	O								
16PCS	16PCS								
K 7*50	L 6*25	M							
6PCS	4PCS	2PCS							
A	B	C 8*40	D 8*30	E 3.5*14	F 3.5*20	G	H	I	J 4*18
32PCS	32PCS	31PCS	14PCS	12PCS	3PCS	8PCS	3PCS	4PCS	4PCS

1 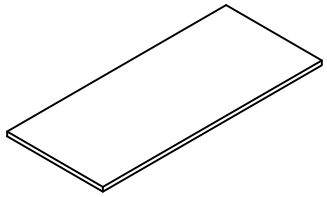 800*350 1PCS	2 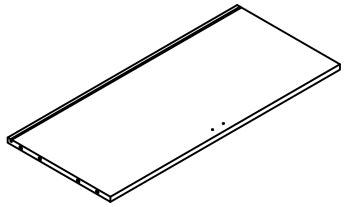 768*344 1PCS	3 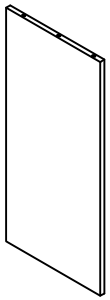 740*344 1PCS	4 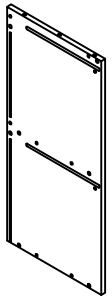 740*344 1PCS	5 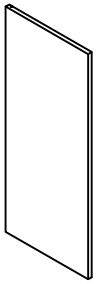 815*344 1PCS
6 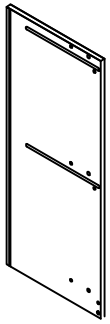 815*344 1PCS	7 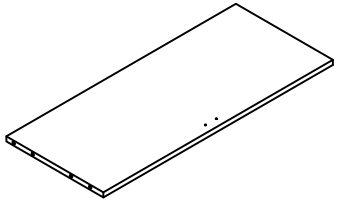 768*324 2PCS	8 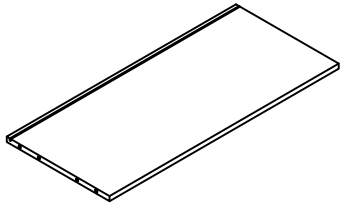 768*328 1PCS	9 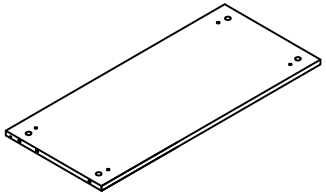 768*344 1PCS	10 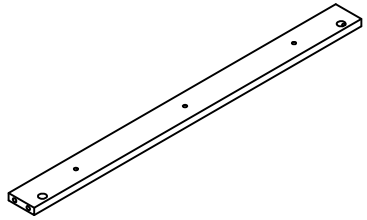 768*60 1PCS
11 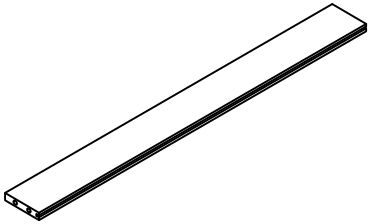 768*80 1PCS	12 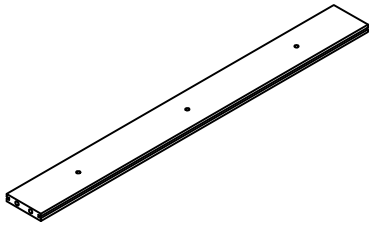 768*80 2PCS	13 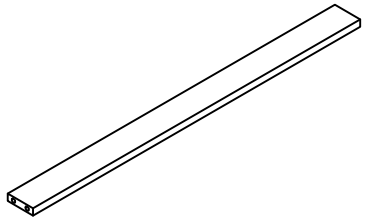 768*60 1PCS	14 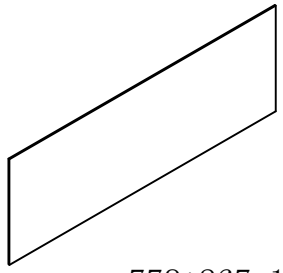 778*267 1PCS	15 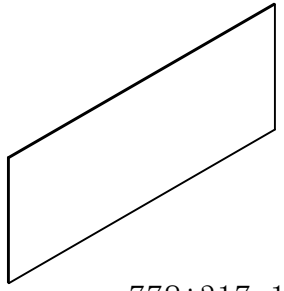 778*317 1PCS
16 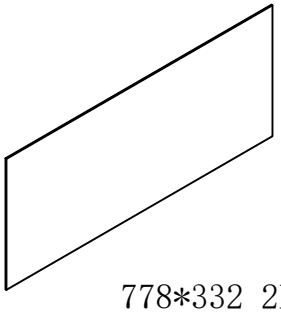 778*332 2PCS	17 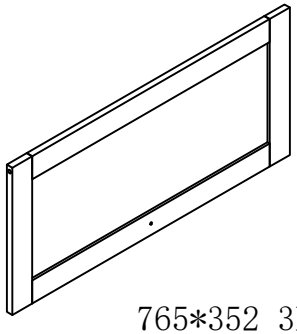 765*352 3PCS	18 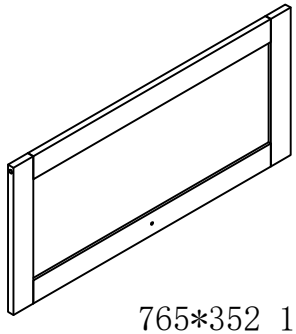 765*352 1PCS		

Hardware installation demonstration

NOTE:Please make sure "A"hardware tightened and can't be pulled out!

I

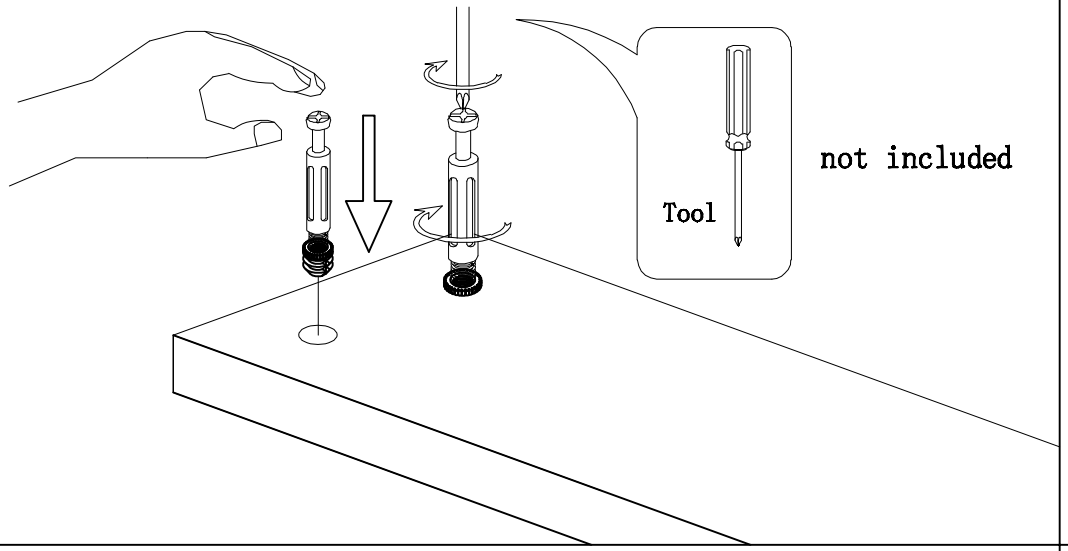

II

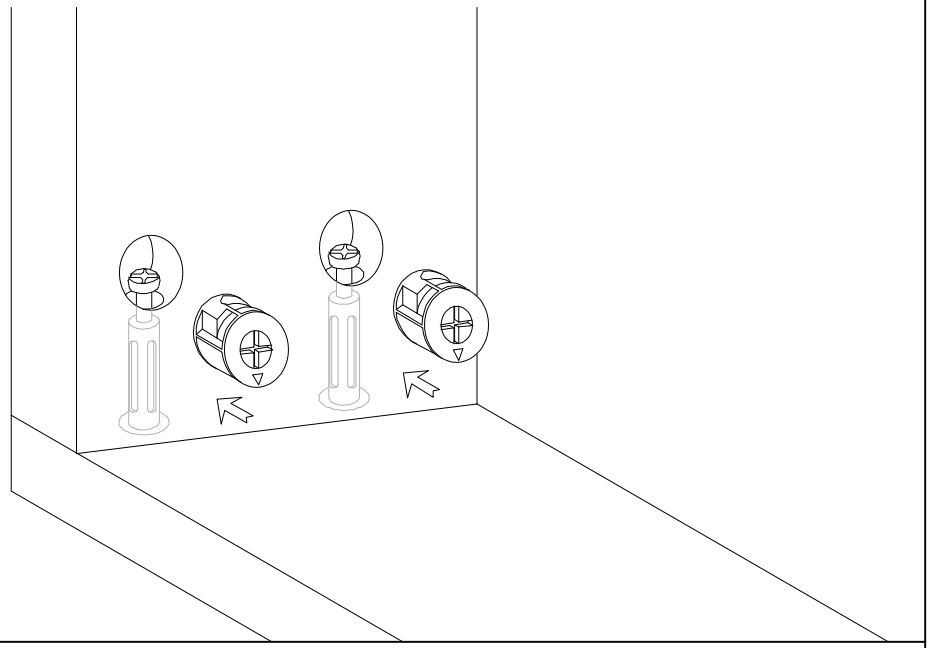

III

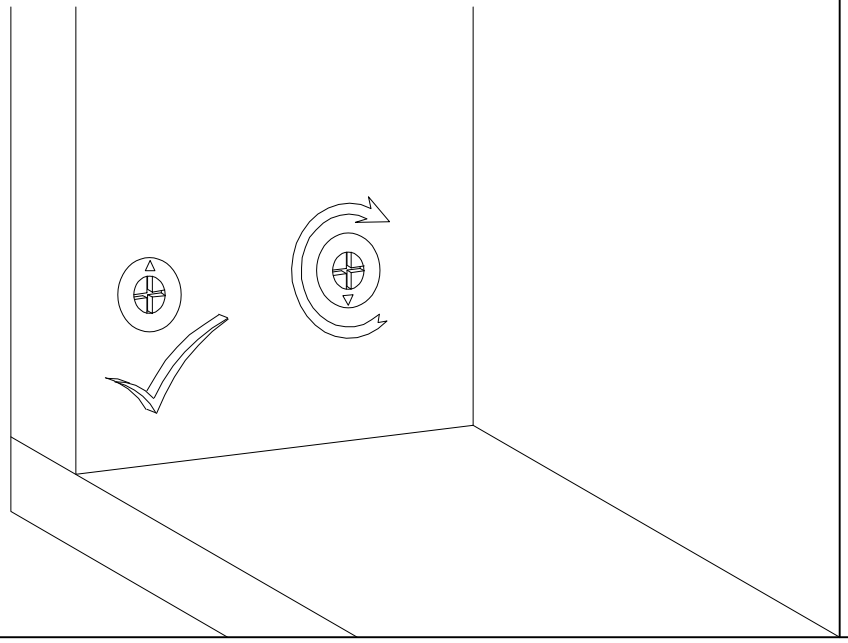

①

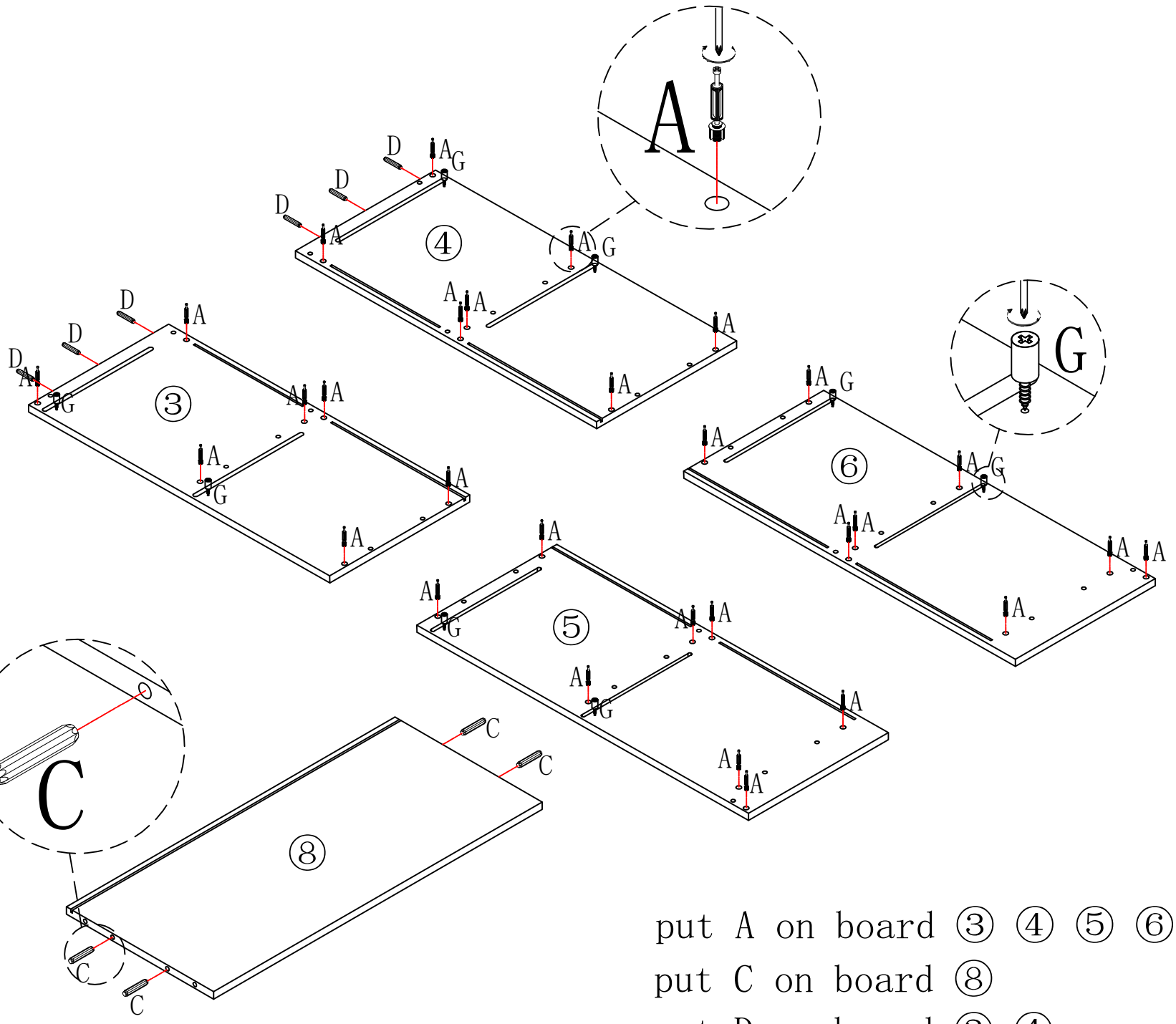

	A*30
	C*4
	D*6
	G*8

put A on board ③ ④ ⑤ ⑥

put C on board ⑧

put D on board ③ ④

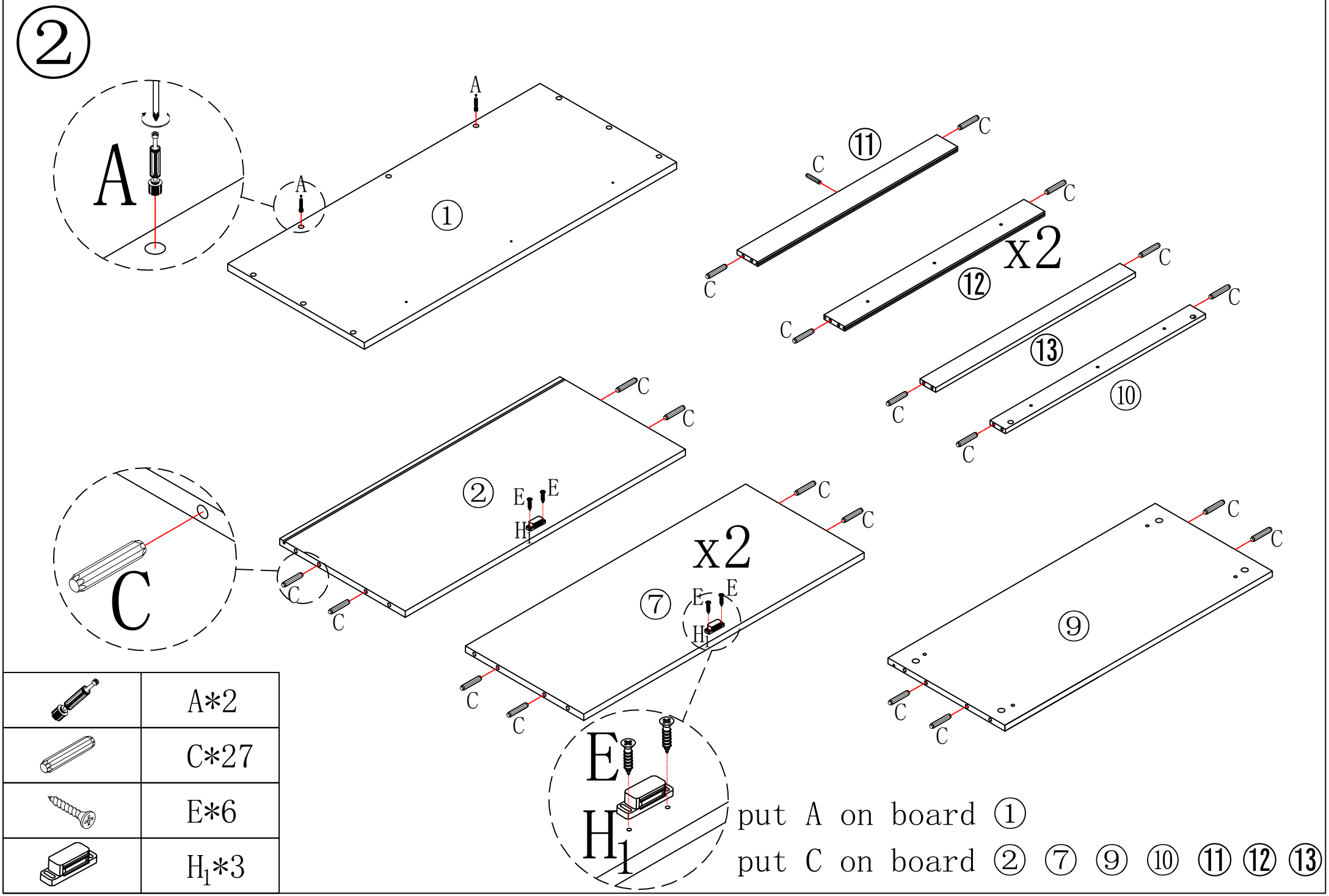
②
A
A
①
⑪
C
C
C
C
x2
⑫
C
C
⑬
C
C
⑩
C
C
C
C
②
E
E
H1
C
C
C
C
x2
⑦
E
E
H1
C
C
C
C
⑨
C
C
C
C
E
H1
A*2
C*27
E*6
H1*3
put A on board ①
put C on board ② ⑦ ⑨ ⑩ ⑪ ⑫ ⑬

③

x2

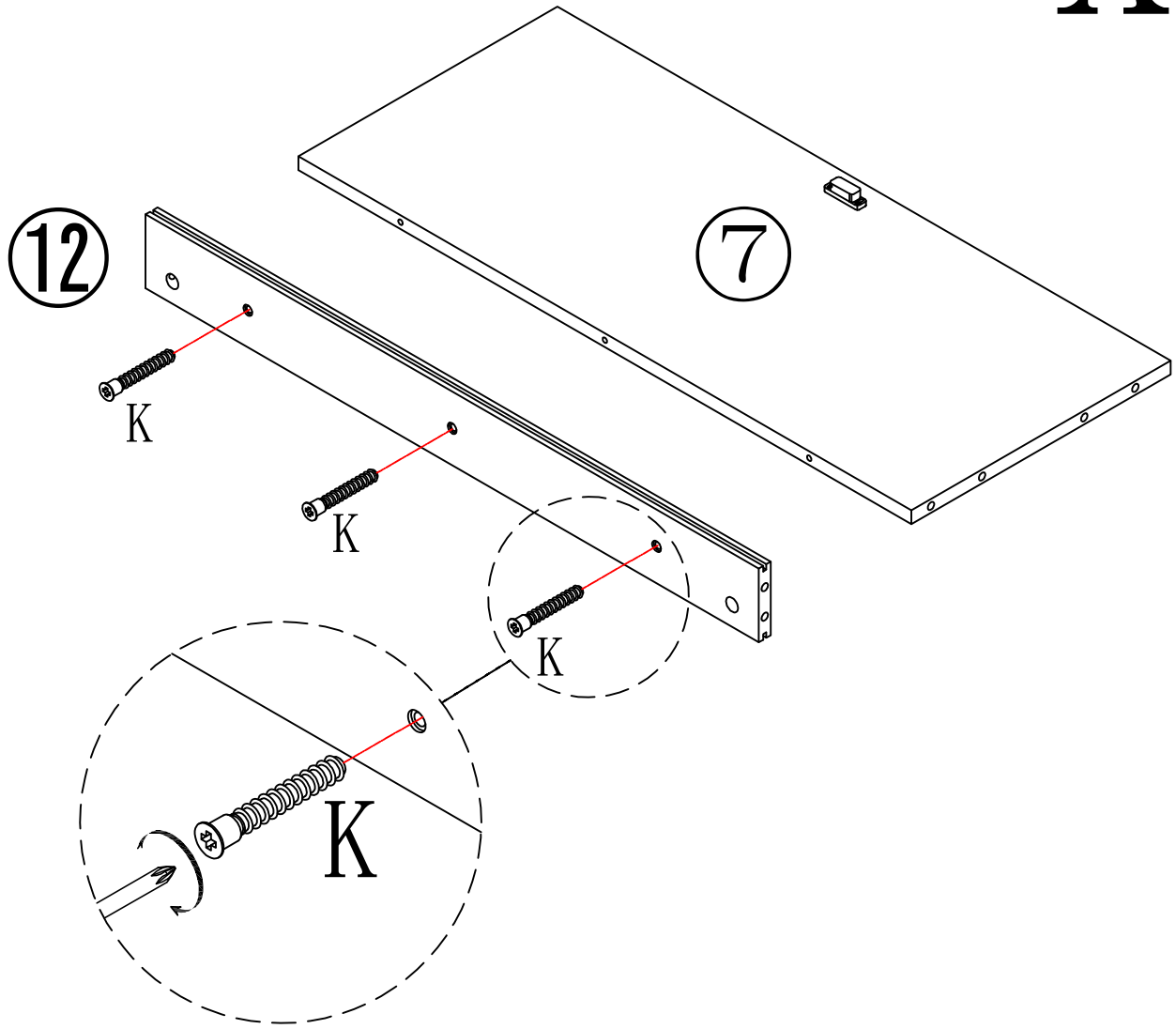

	K*6

4

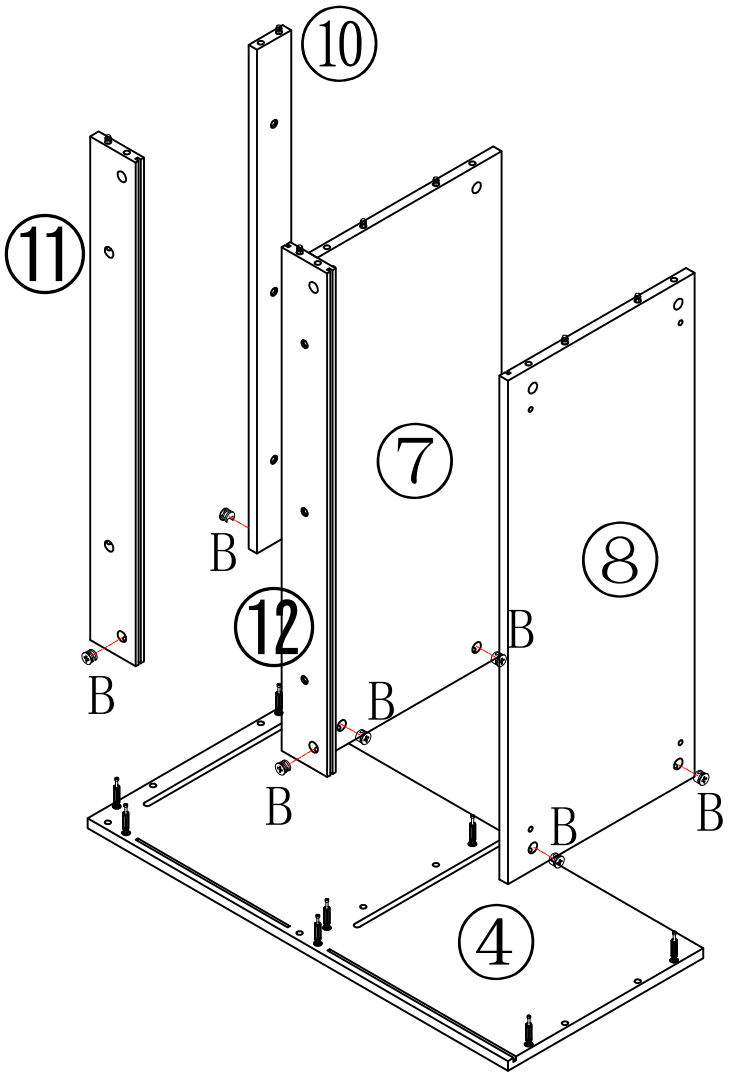

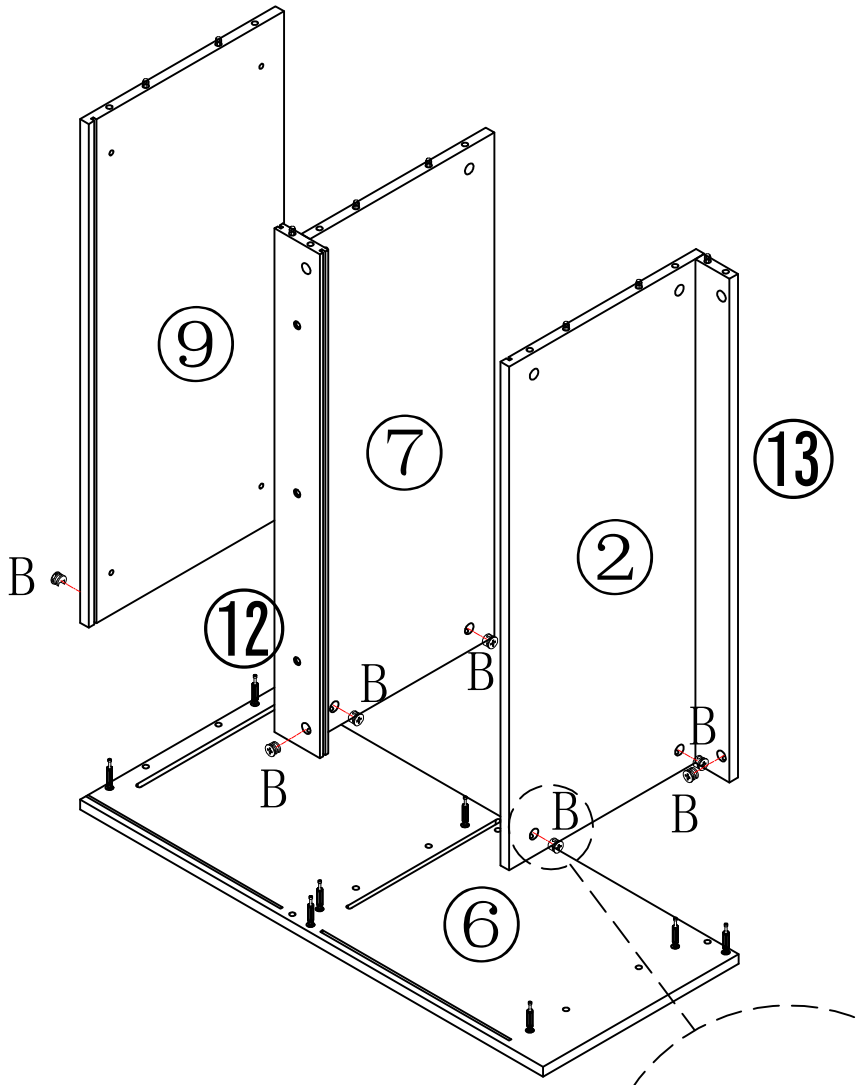

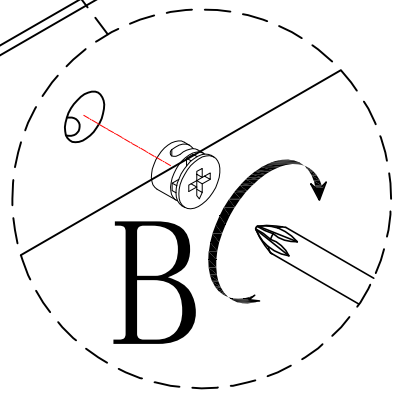

Make sure the arrow on the screw align to the hole on the side.

put B on board ⑤ ⑥

	B*15

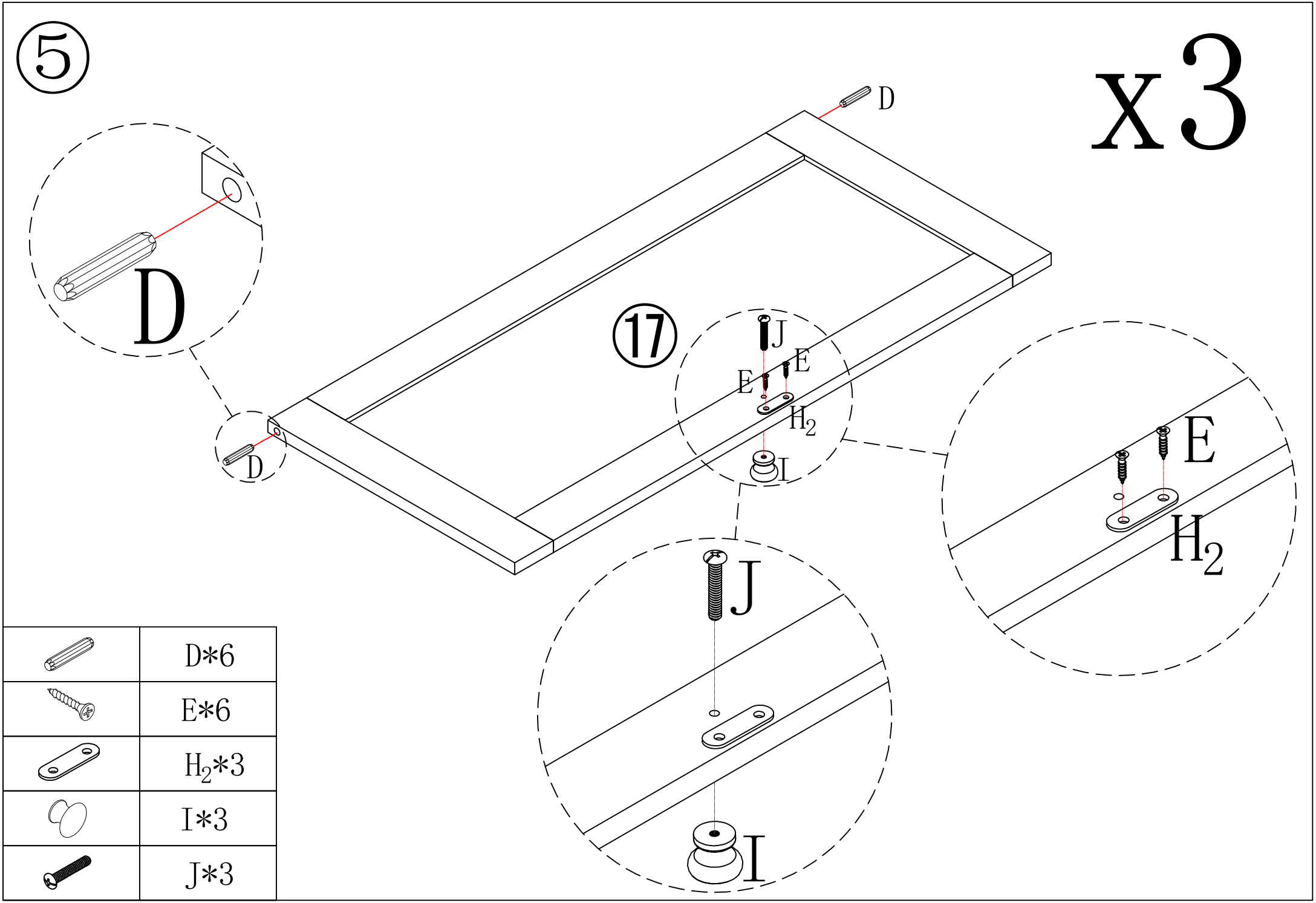

	D*6
	E*6
	H_2*3
	I*3
	J*3

6

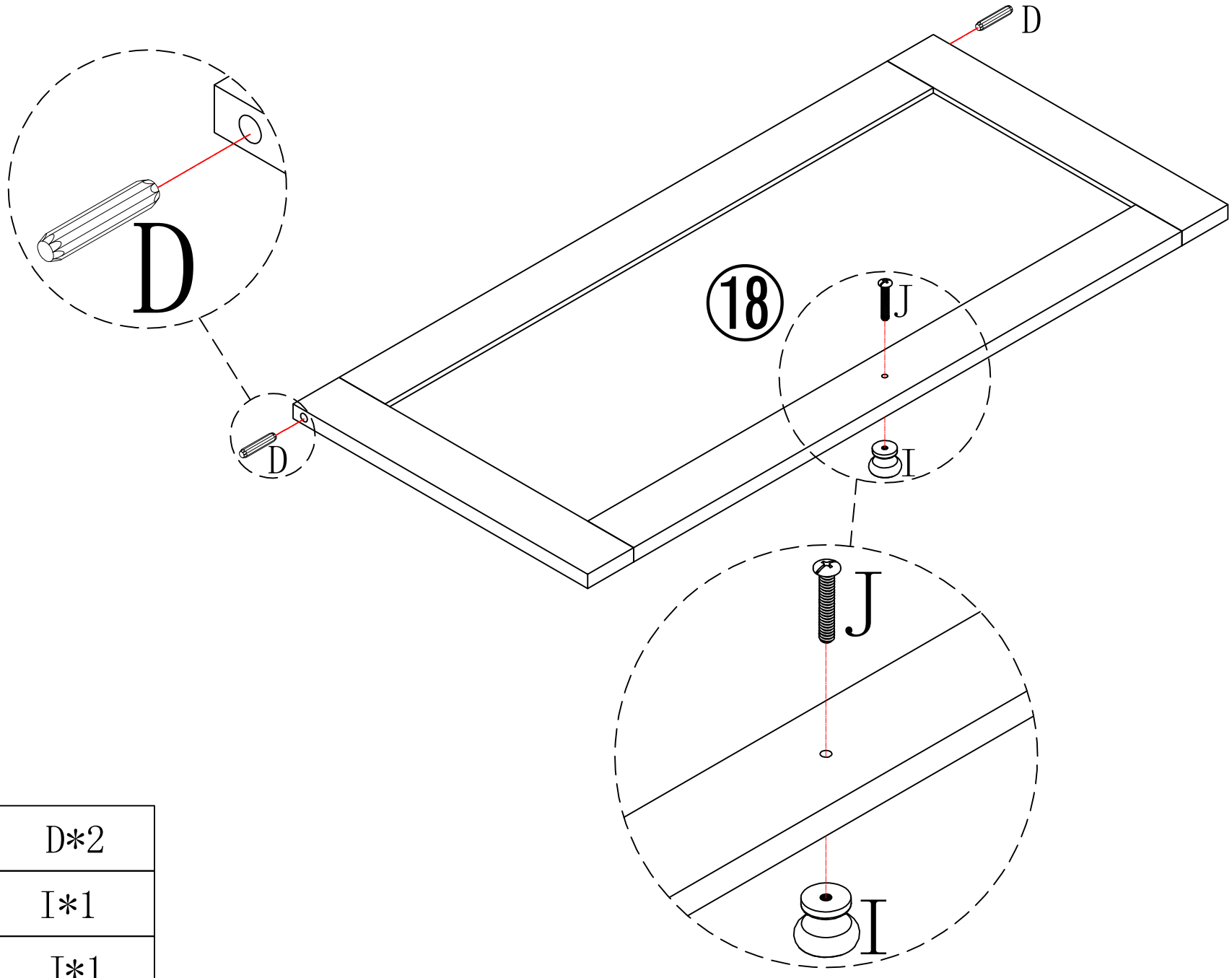

	D*2
	I*1
	J*1

7

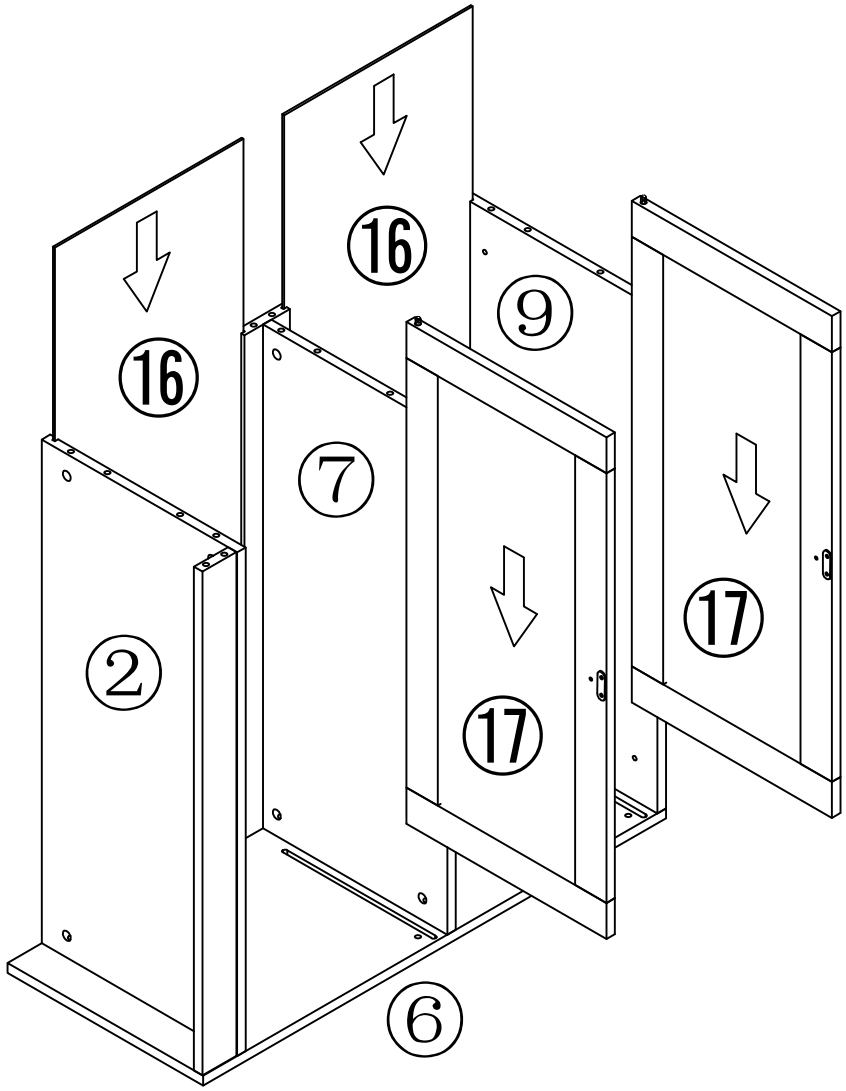

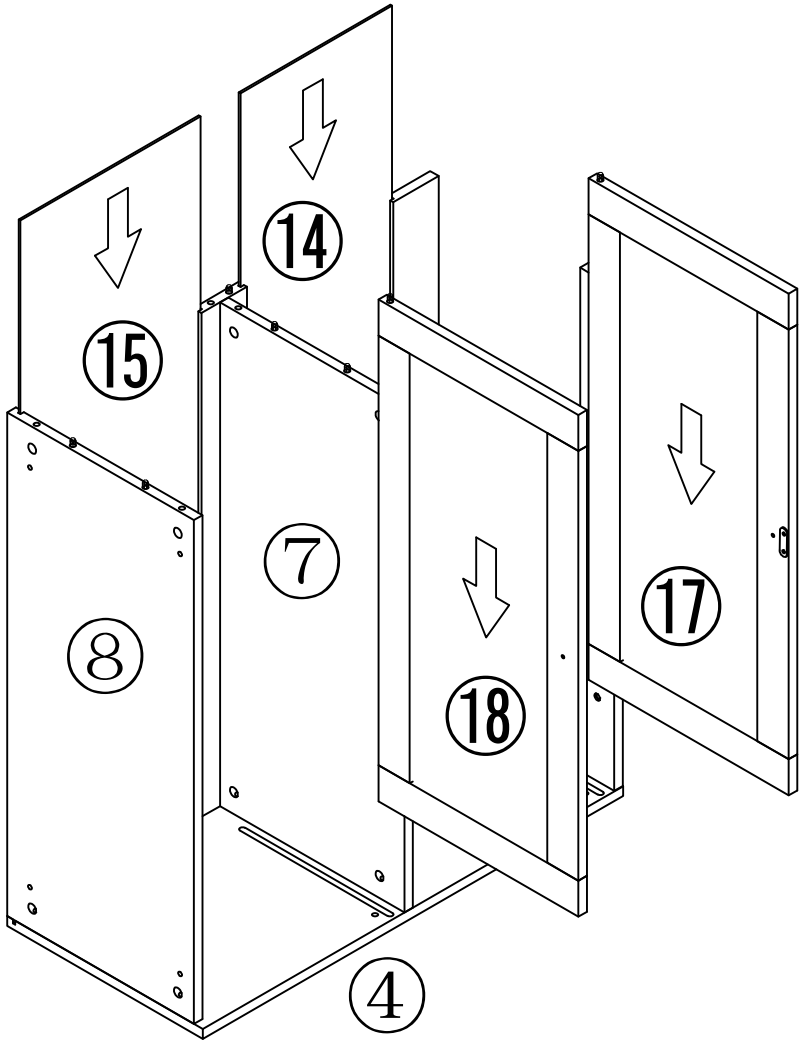

8

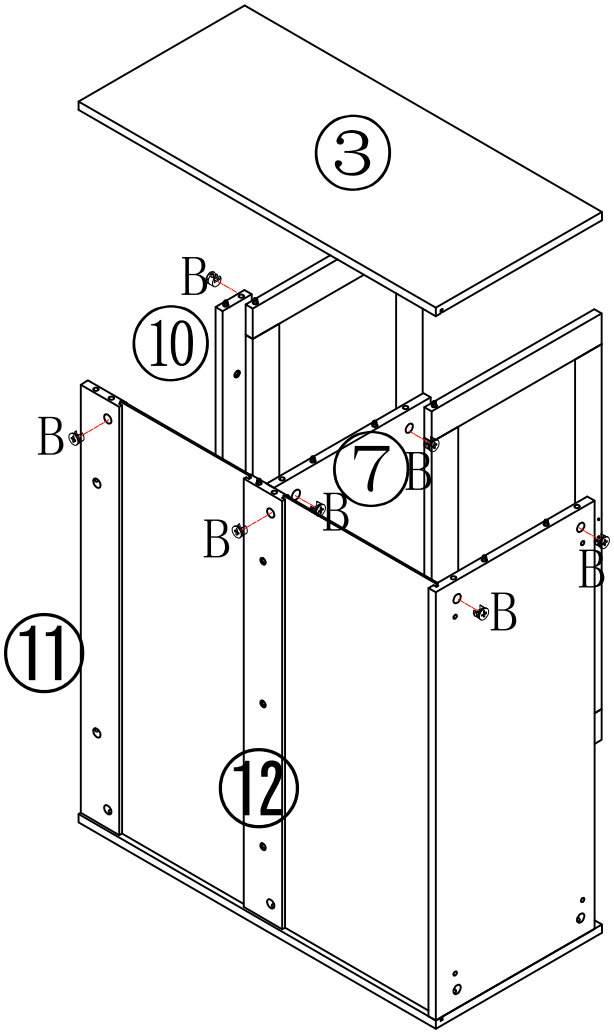

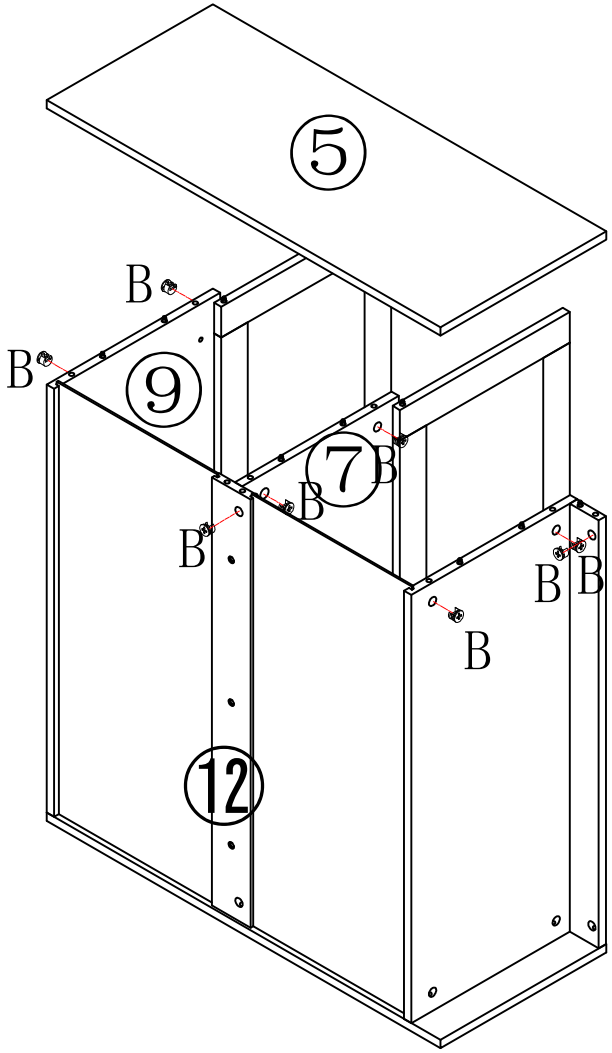

	B*15

9

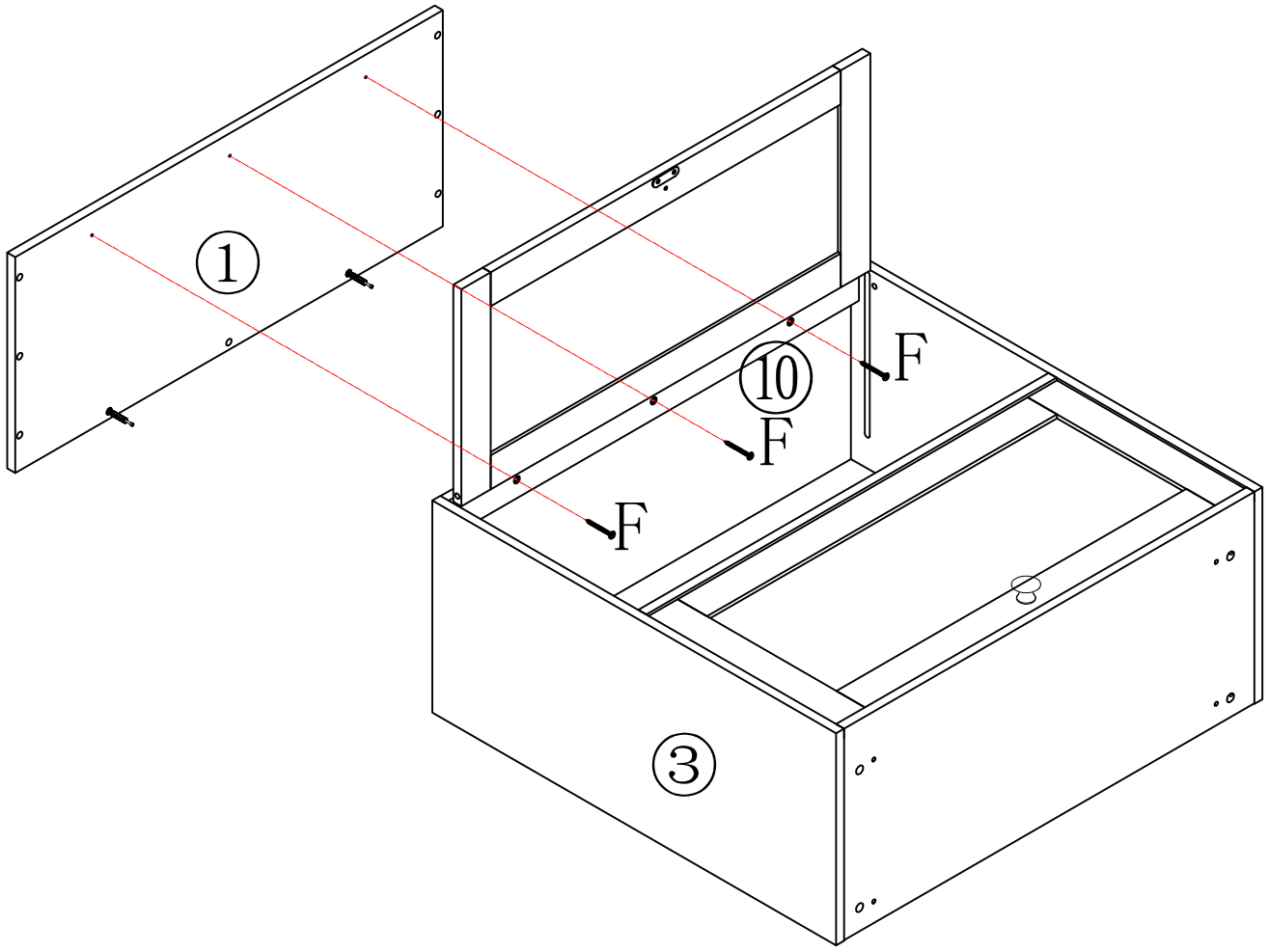

	F*3

⑩

put B on board ⑪

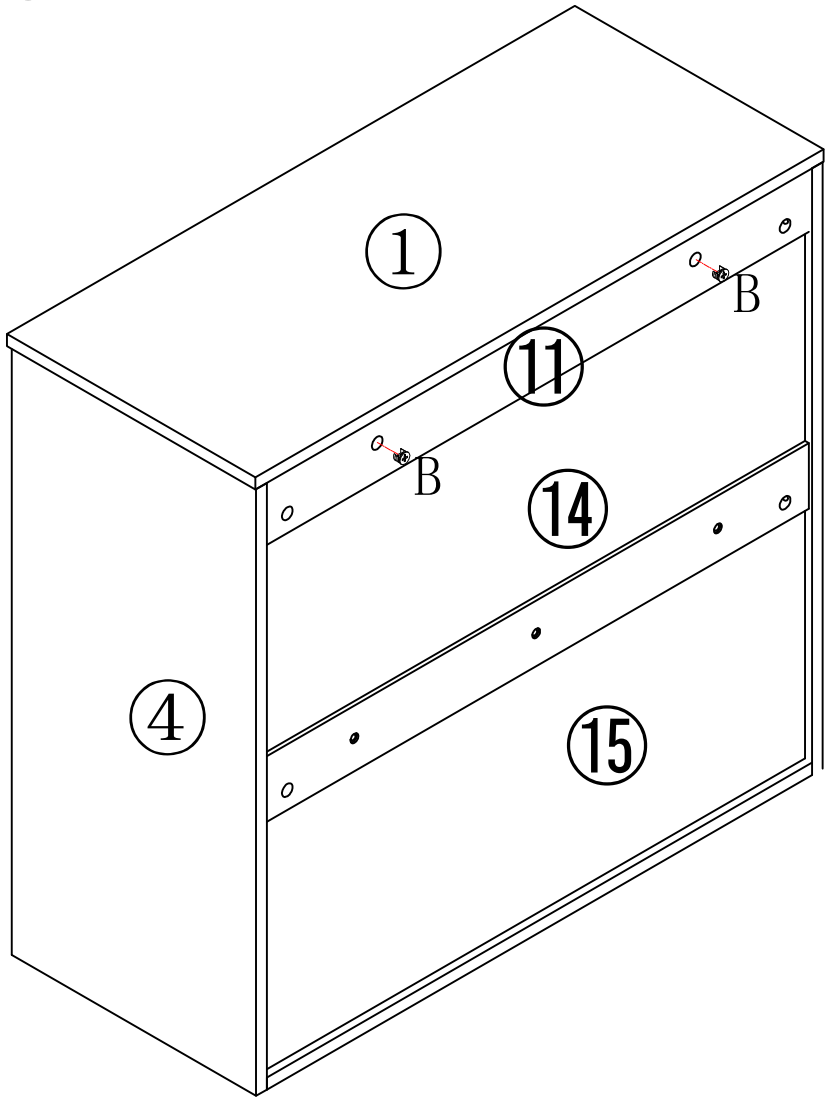

	B*2

11

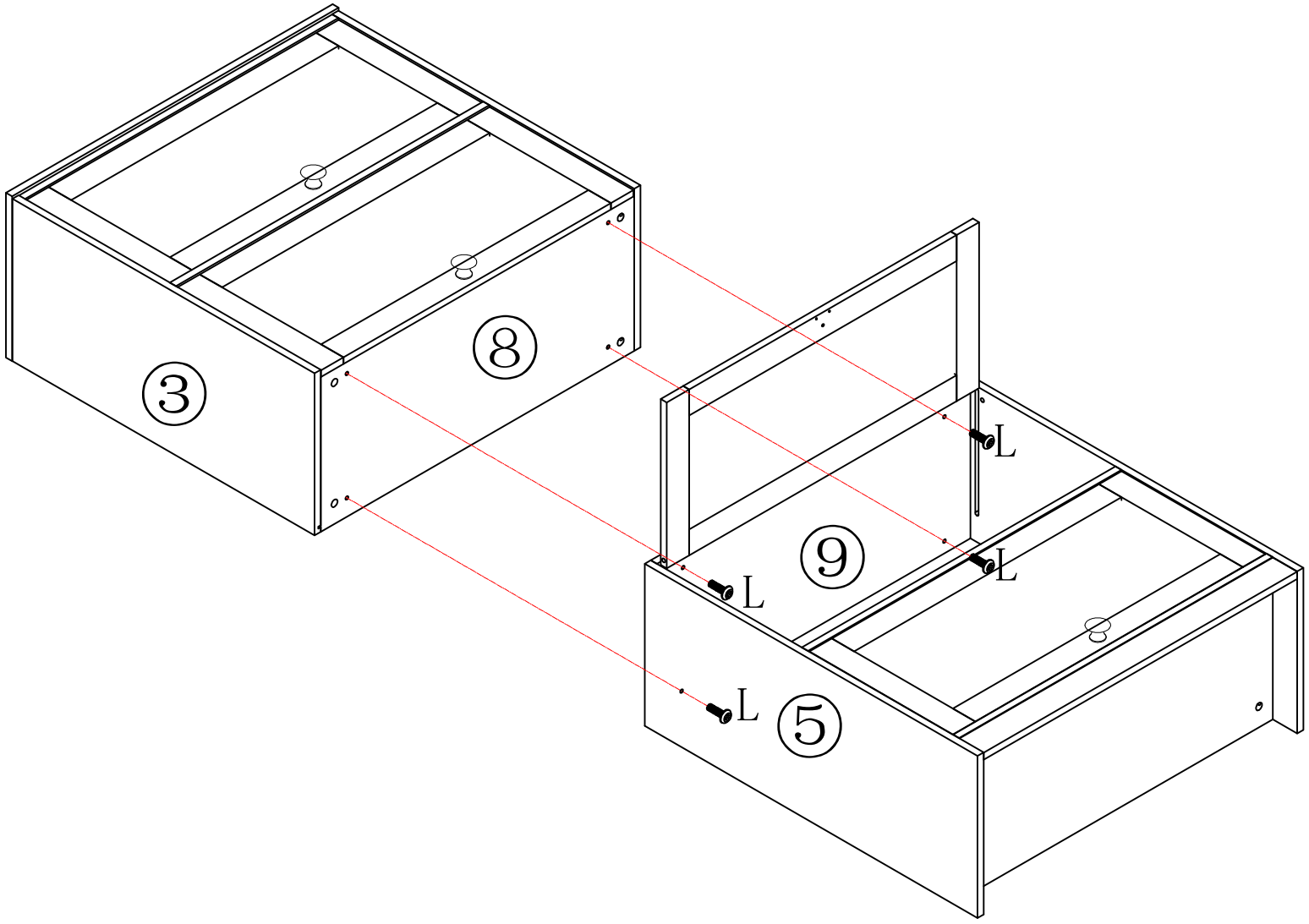

	L*4

12

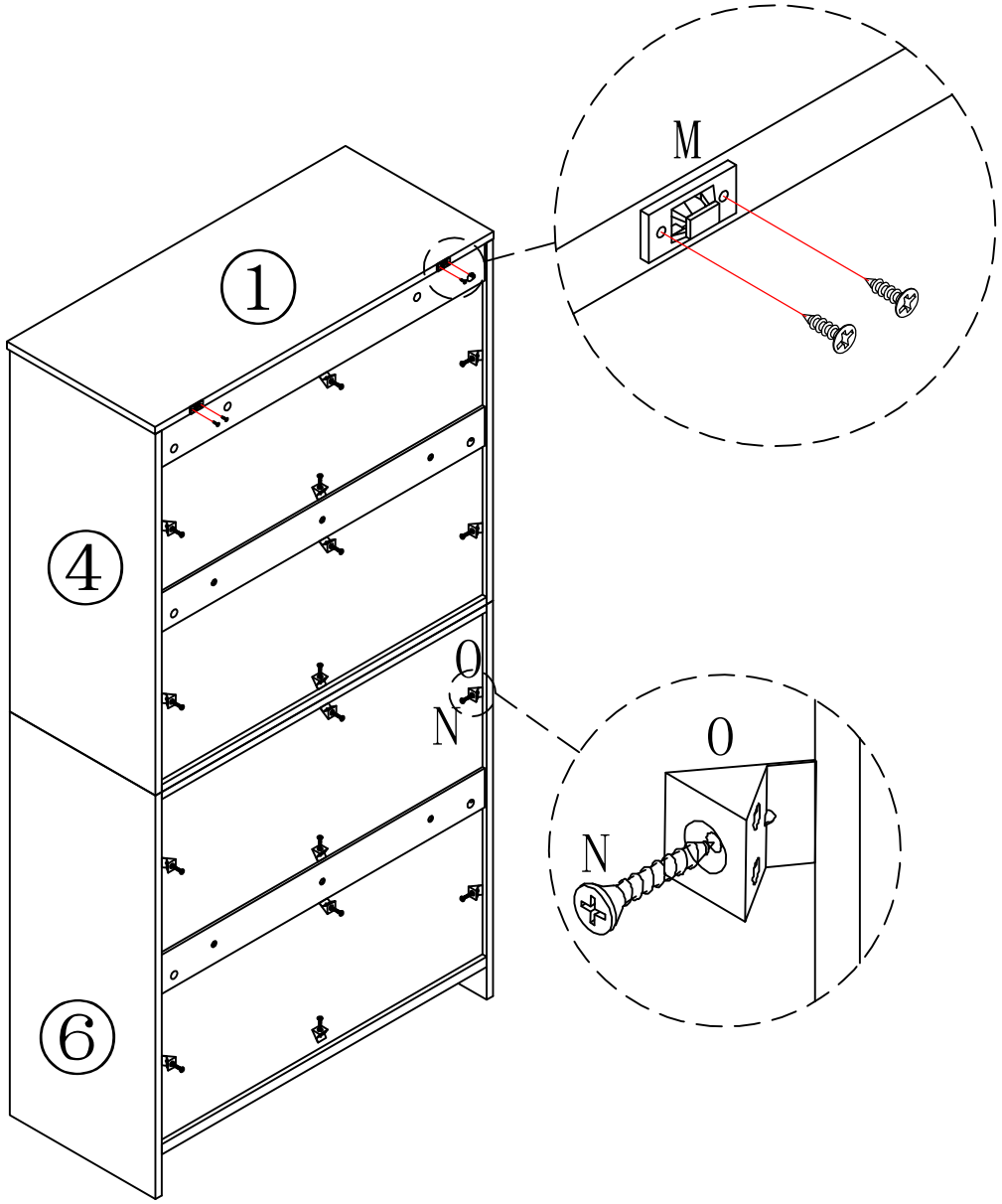

	M*2
	N*16
	0*16

13

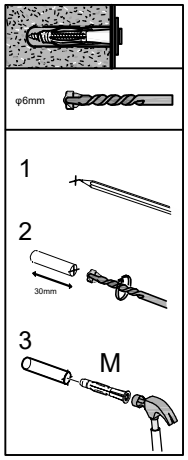

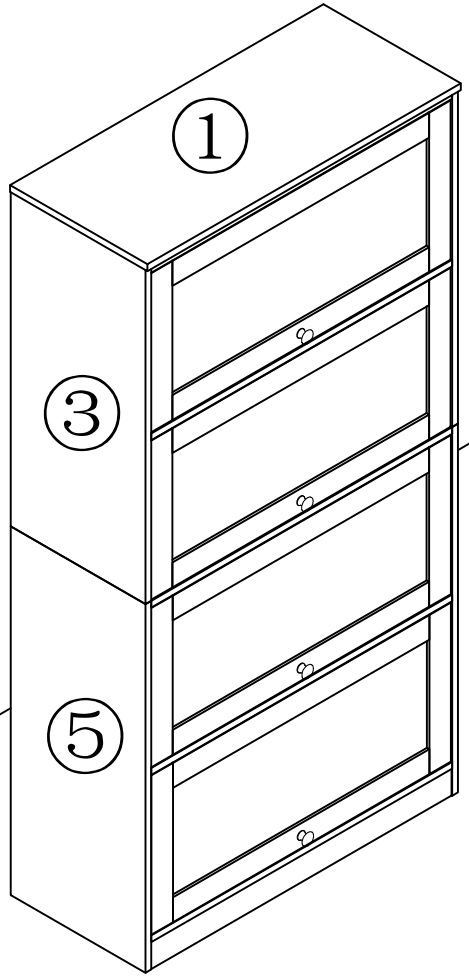



M*2

14

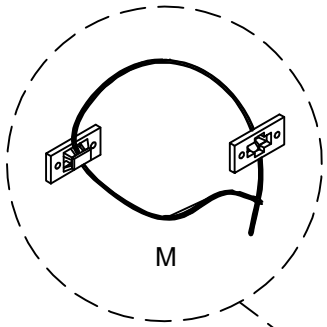

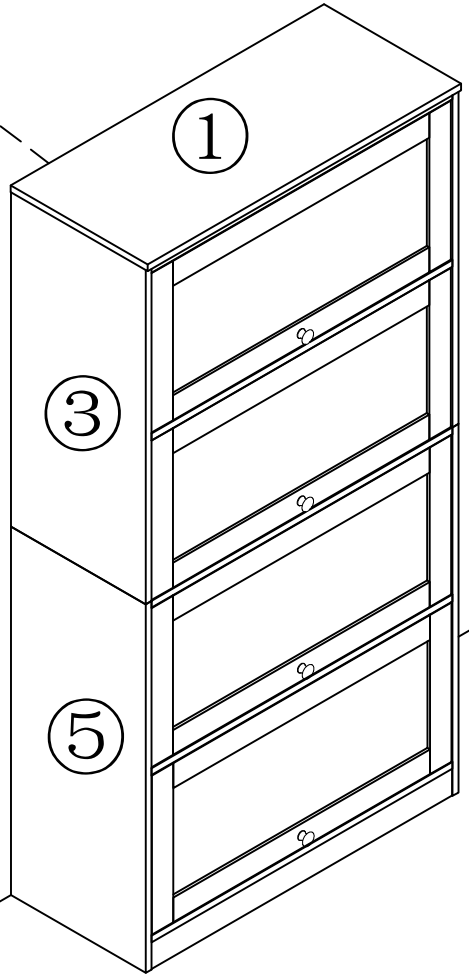

	M*2

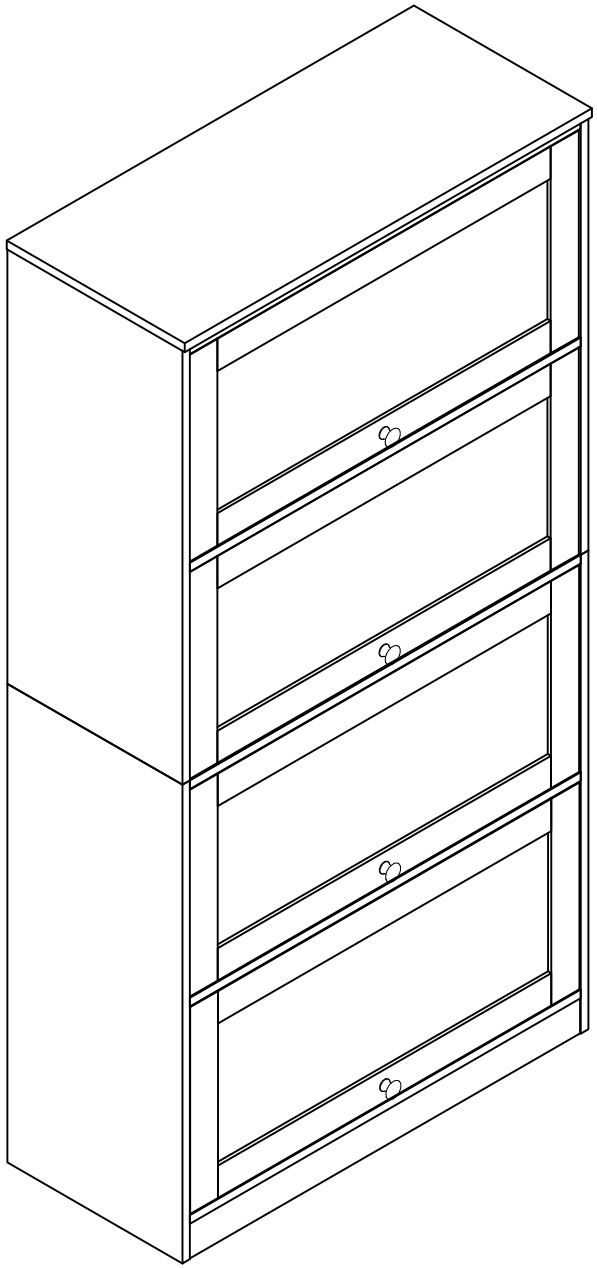

END