ASSEMBLY INSTRUCTIONS

V-WD26-1409

PF035



WARNING !

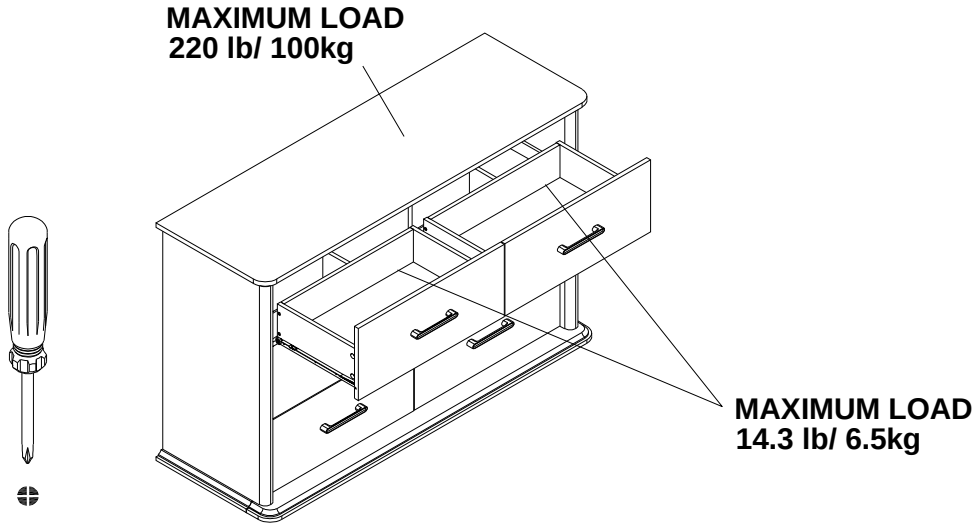

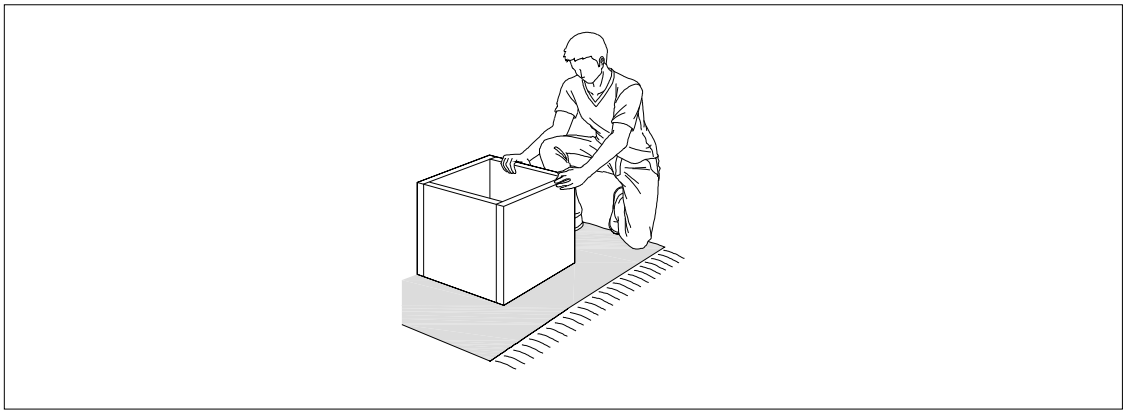

Assembly the furniture on empty carton, carpet, or rug to prevent scratches or damage.

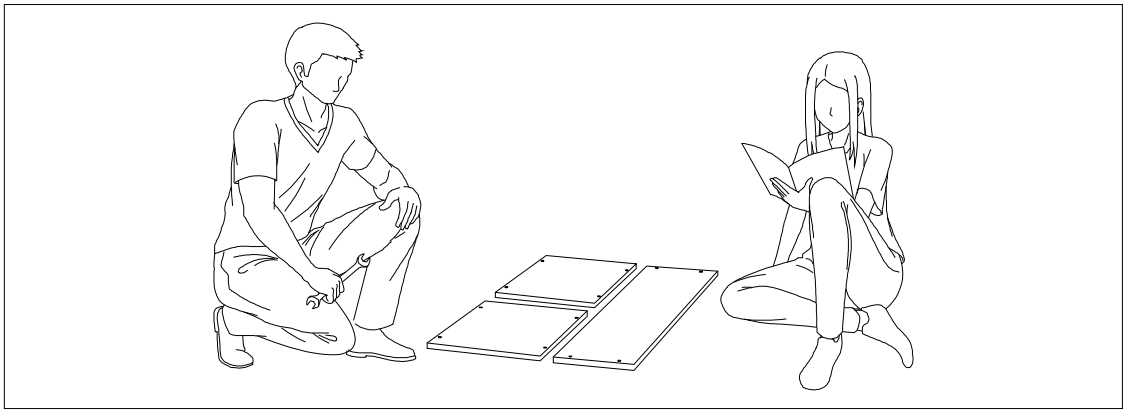

This furniture requires 2 people to assembly.

Make sure no parts are missing or damaged before assembly.

PACKAGE CONTENT

Board Identification

Not actual size

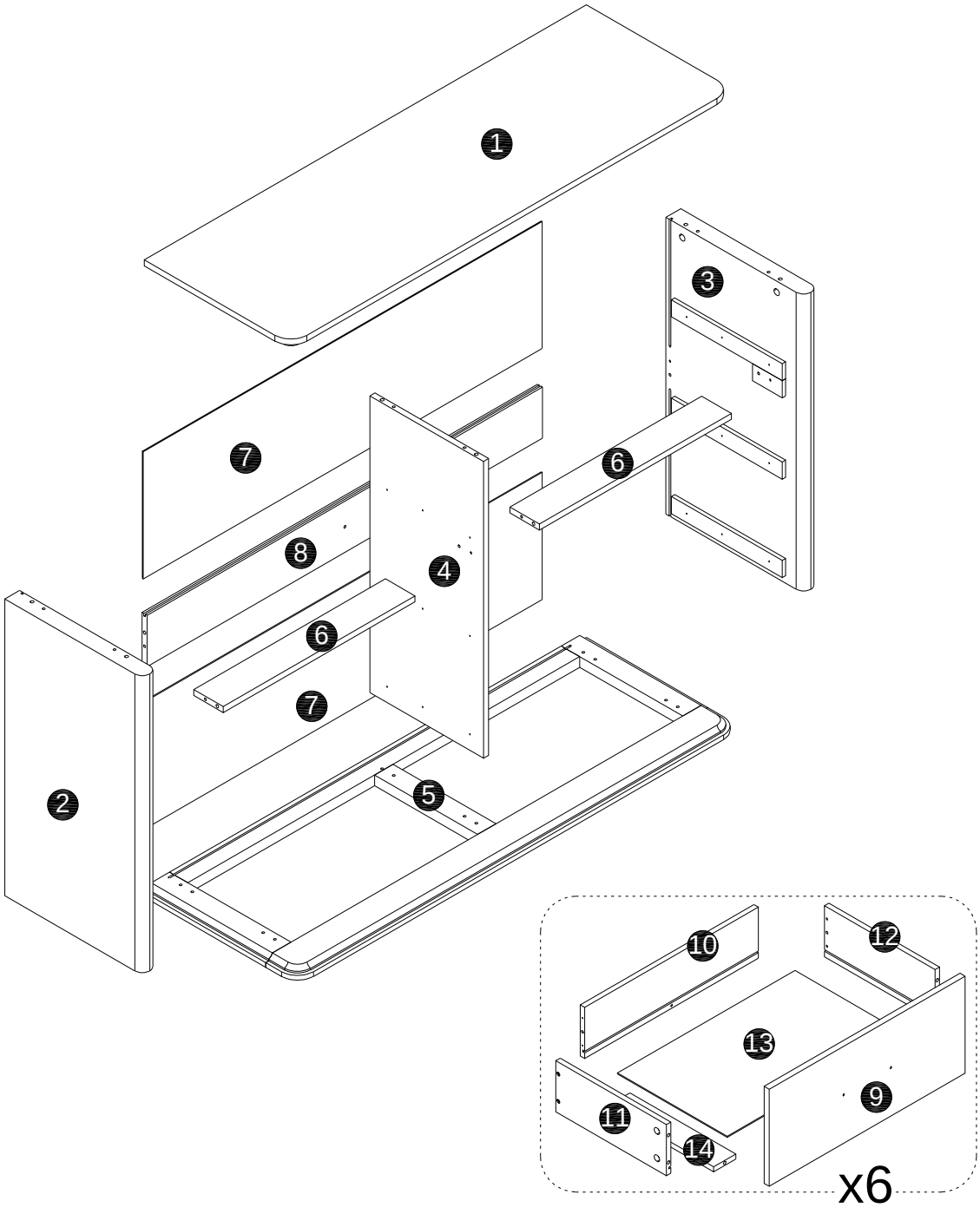

BOARD IDENTIFICATION

Not actual size

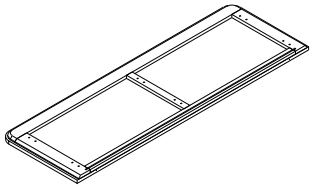

① x 1

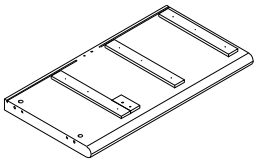

② x 1

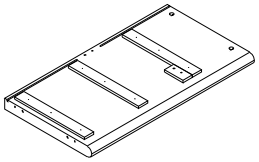

③ x 1

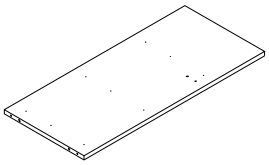

④ x 1

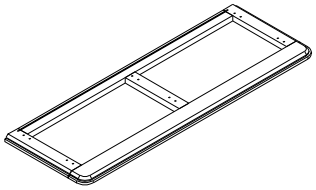

⑤ x 1

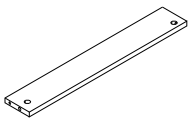

⑥ x 2

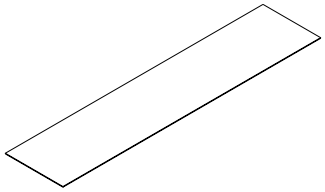

⑦ x 2

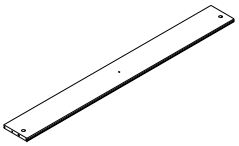

⑧ x 1

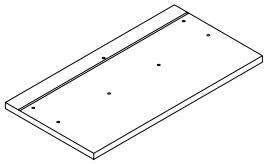

⑨ x 6

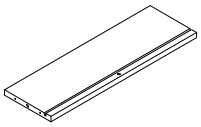

⑩ x 6

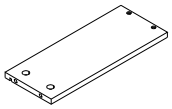

⑪ x 6

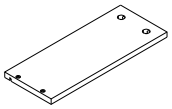

⑫ x 6

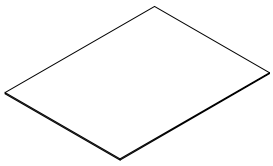

⑬ x 6

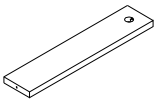

⑭ x 6

HARDWARE LIST

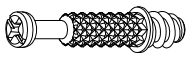

Ø6x33.5mm

A x42+4



Ø15x9.5mm

B x42+4

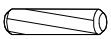

Ø6x30mm

C x30+3

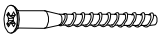

Ø5x50mm

D x 7+1



Ø3.5x12mm

E x69+6

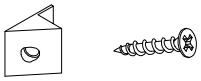

Ø3x15mm

F x 8+1



Ø4x38mm

G x30+3

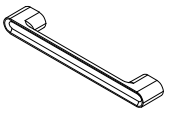

H x 6

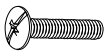

M4x20mm

I x 12

J1x2 J2x4 J3x2



140X19MM



Ø16xØ6.5x1mm



Ø4x16mm

J x 1SET

K1x2 K2x2



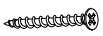

Ø6x30mm Ø4x35mm

K 1SET

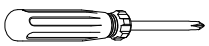

L x 1

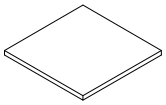

M x 6

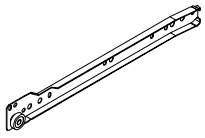

CL x 6

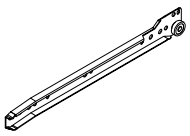

CR x 6

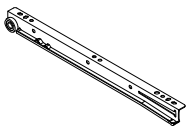

DR x 6

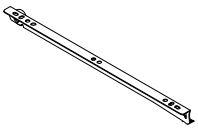

DL x 6

Cam Lock Fastening System

Insert the cam bolt into the hole first, then insert the cam lock and lock it.

1

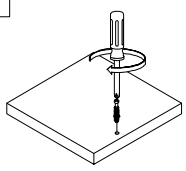

2

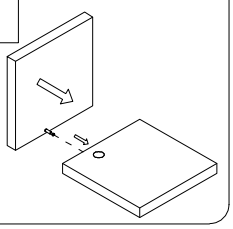

3

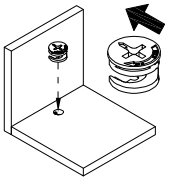

The opening must point toward the edge of the board

4

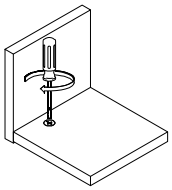

STEP 1

PF035

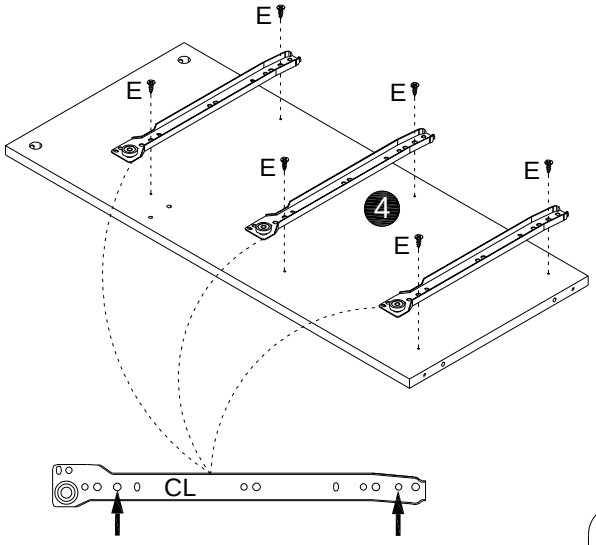

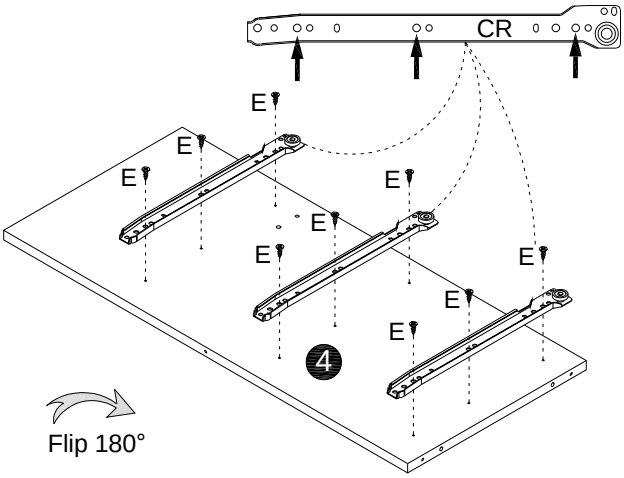

Flip 180°

CR	x 3

CL	x 3

Ø3.5X12mm

E	x 15

STEP 2

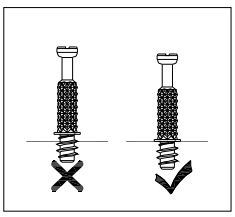

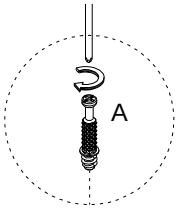

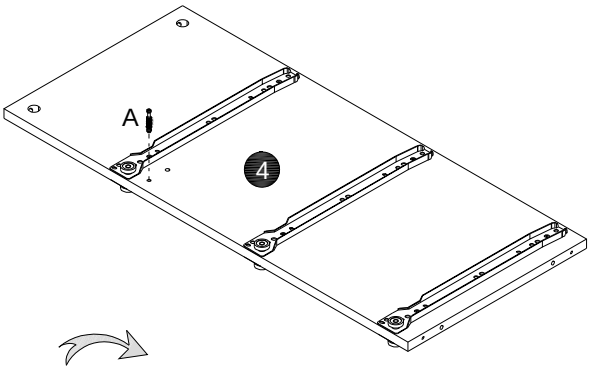

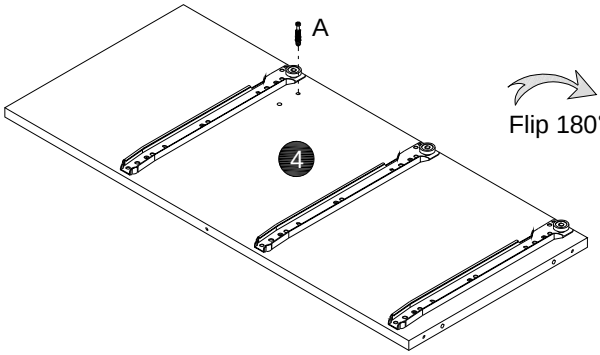

Flip 180°

Ø6X33.5mm

A	x 2

STEP 3

PF035

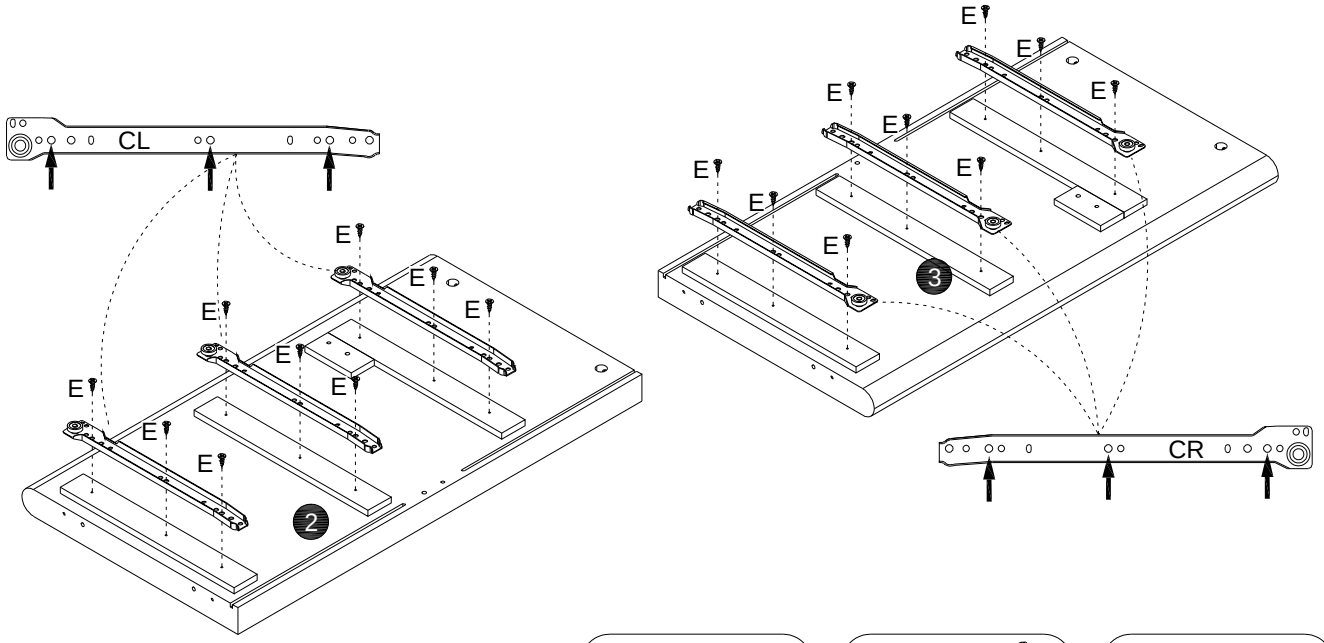

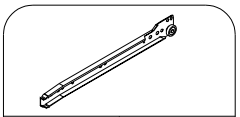	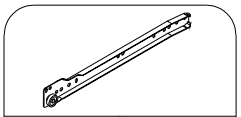	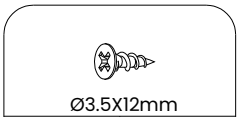
CR x 3	CL x 3	Ø3.5X12mm E x 18

STEP 4

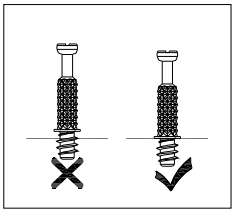

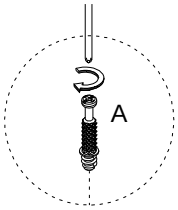

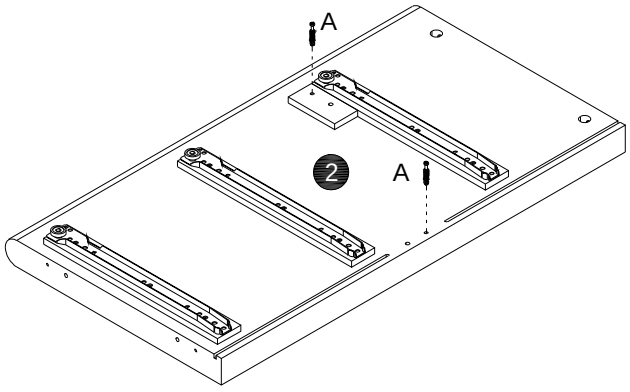

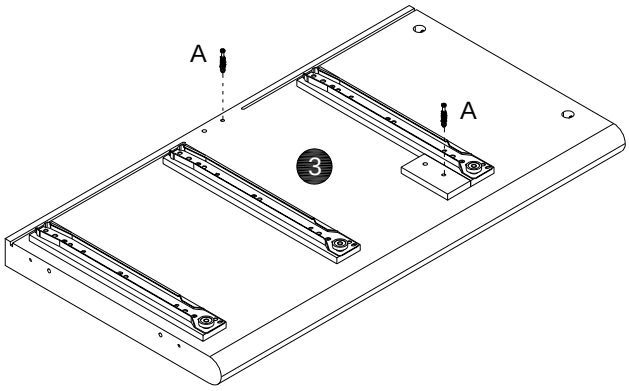


Ø6X33.5mm
A x 4

STEP 5

PF035

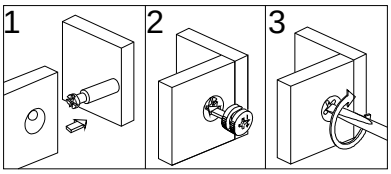

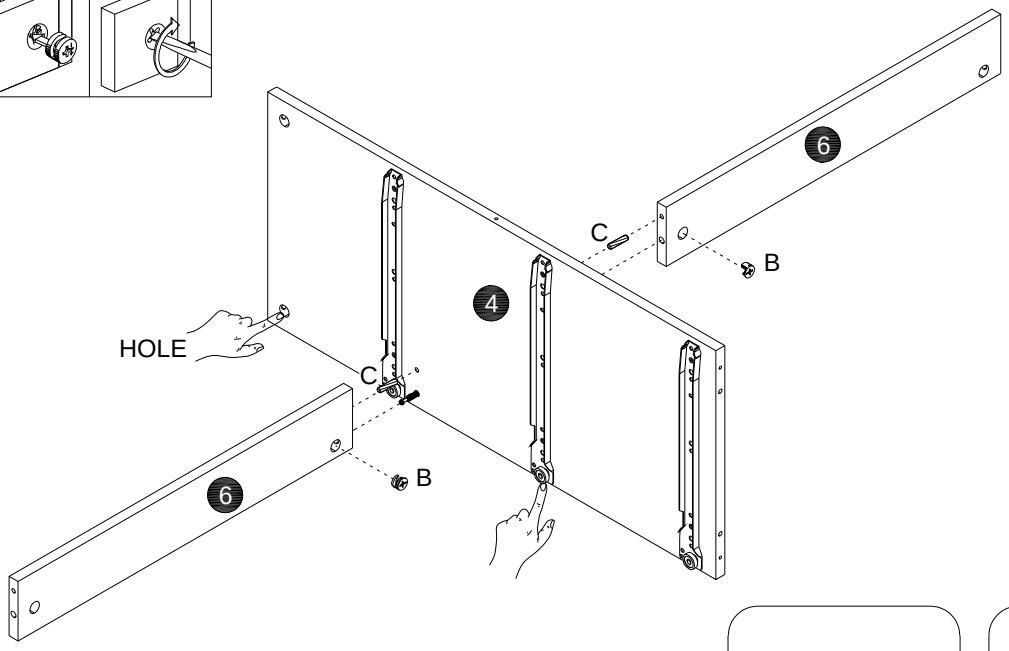

Ø6X30mm	
C	X 2

Ø15X9.5mm	
B	X 2

STEP 6

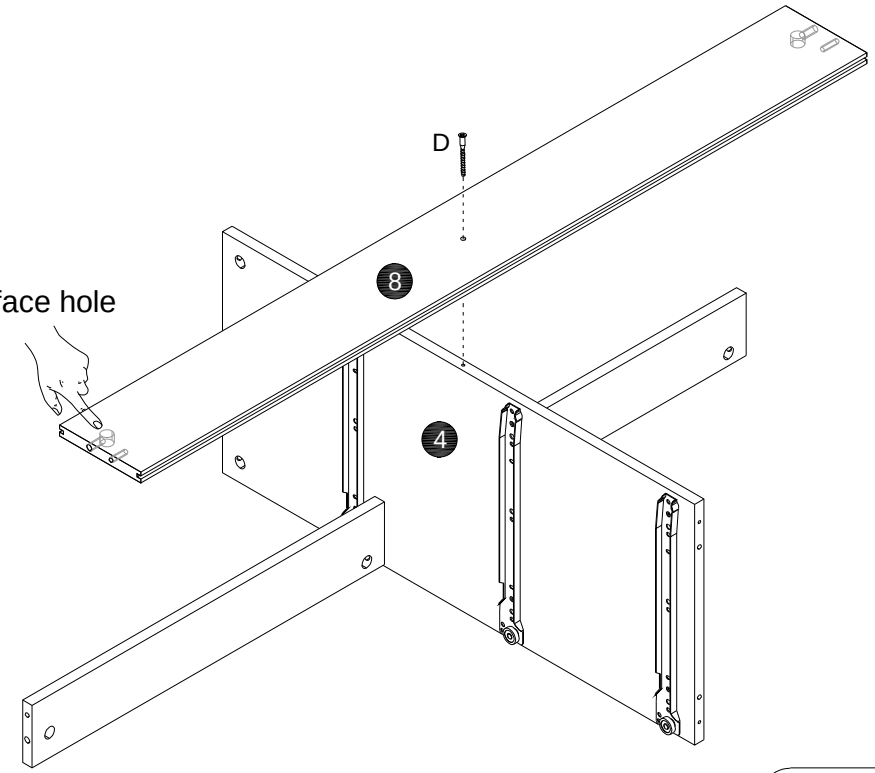

Lower face hole

After this step is assembled,
flip it 180 degrees(to next step)



CAUTION: Heavy! You may need assistance with this step

Ø5X50mm	
D	X 1

STEP 7

PF035

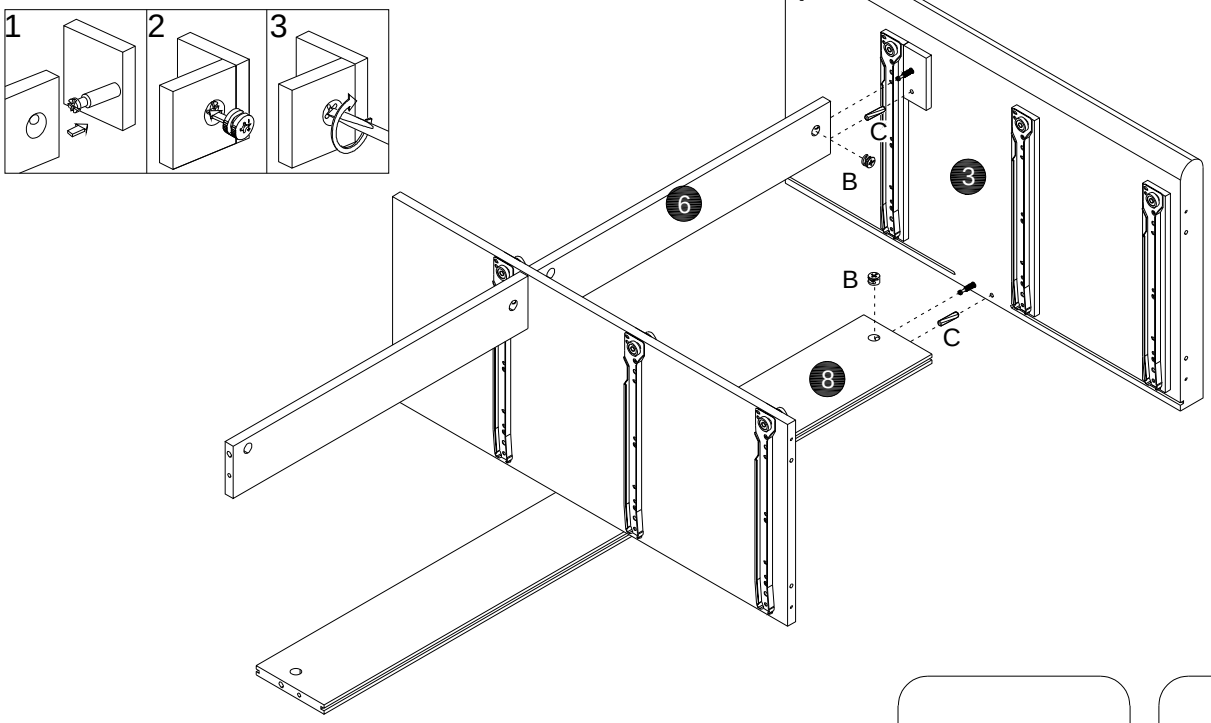

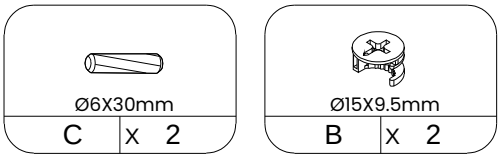

STEP 8

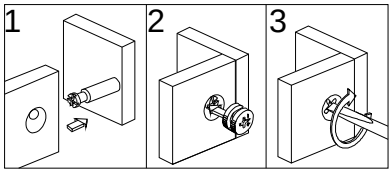

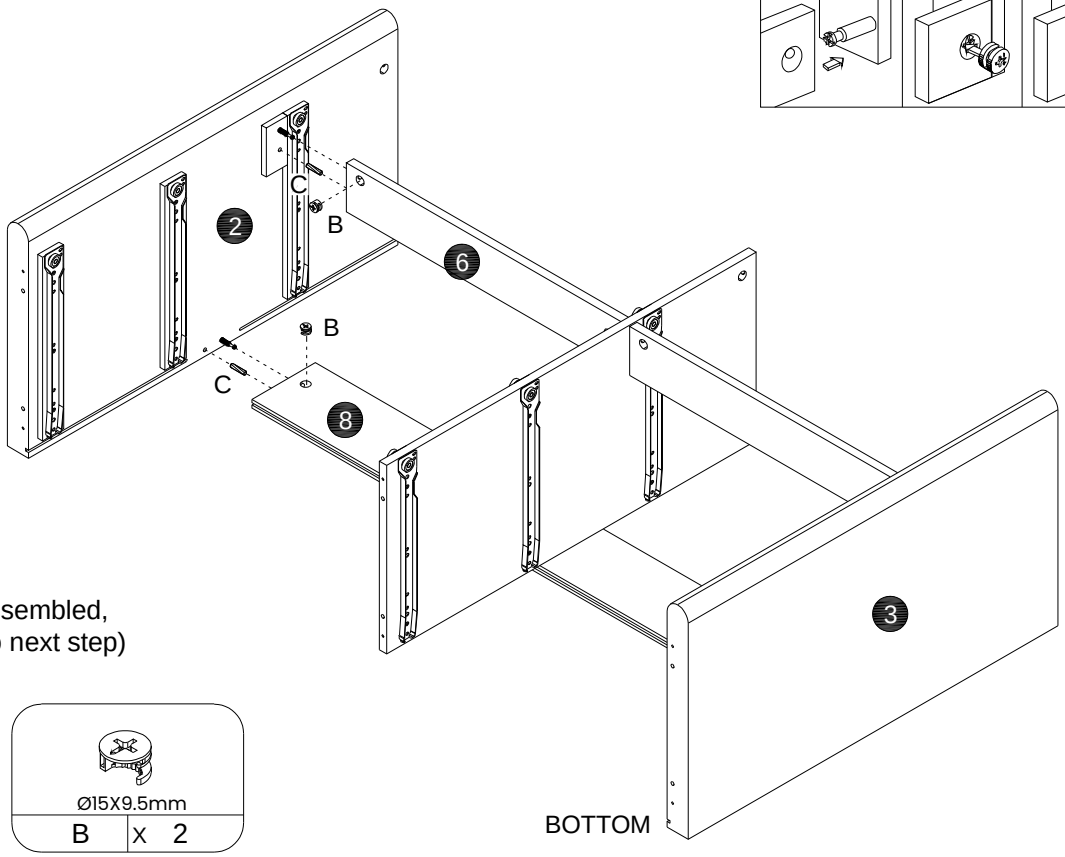

After this step is assembled,
flip it 90 degrees(to next step)

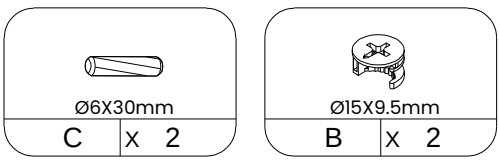

STEP 9

PF035

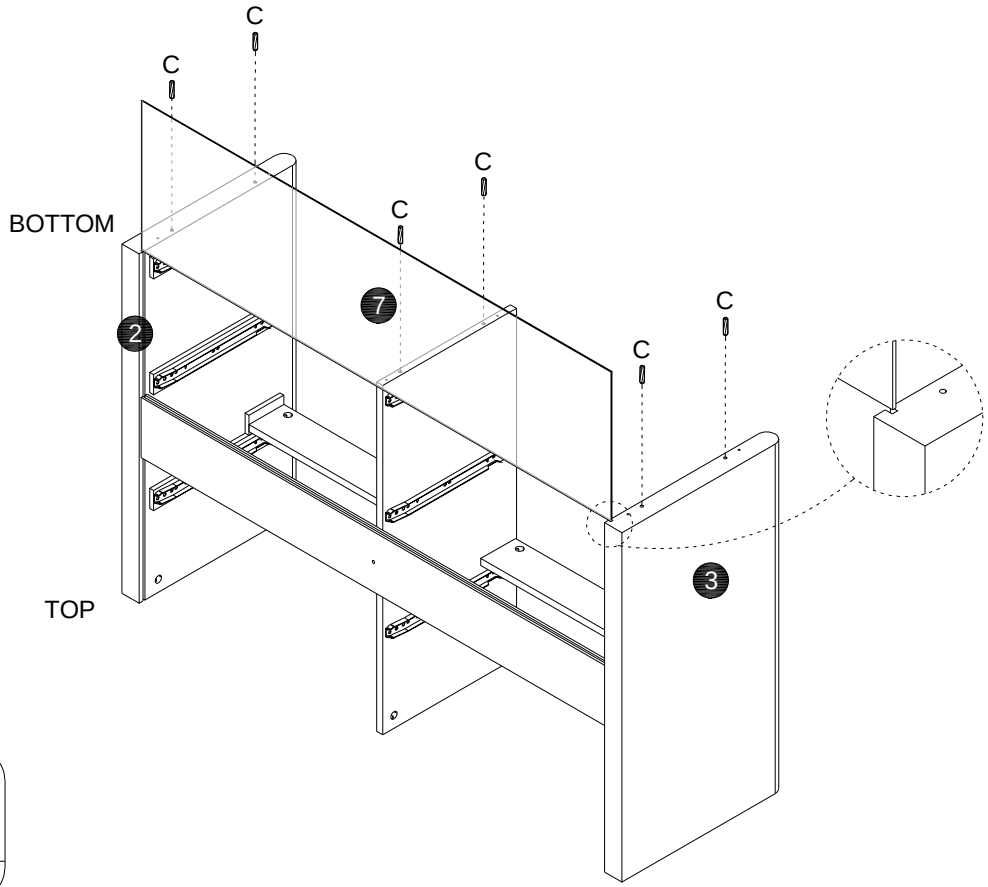

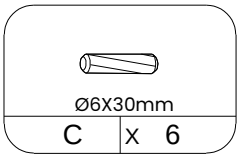

STEP 10

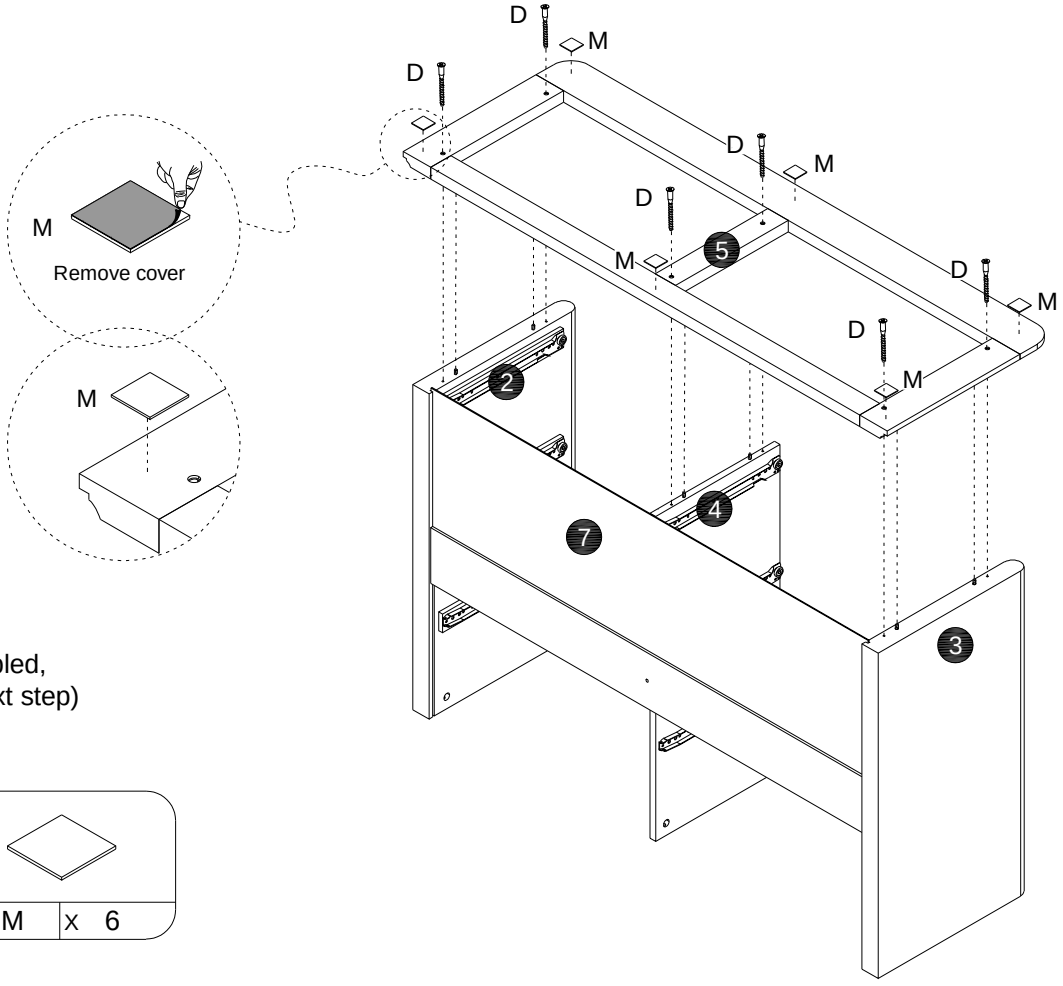

After this step is assembled,
flip it 180 degrees(to next step)

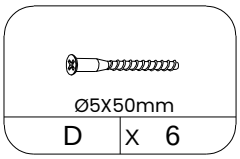

STEP 11

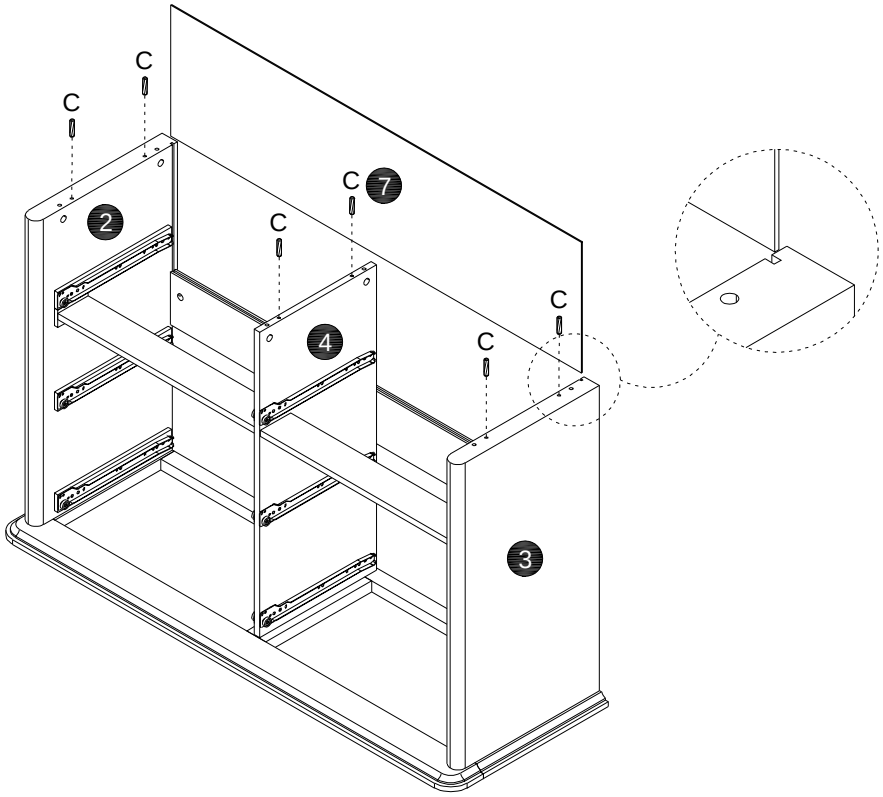

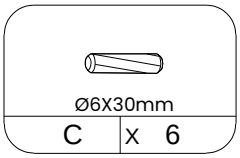

STEP 12

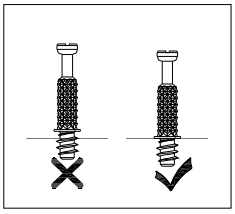

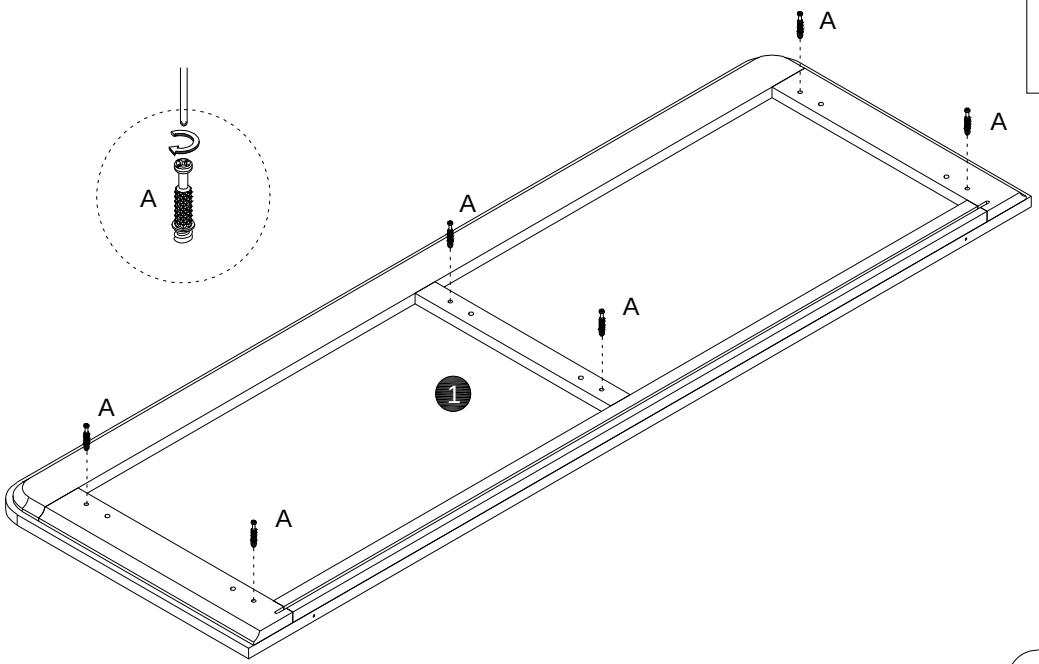

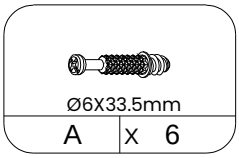

STEP 13

PF035

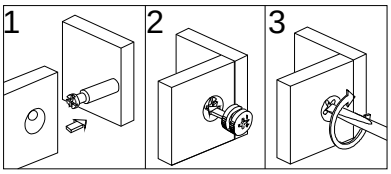

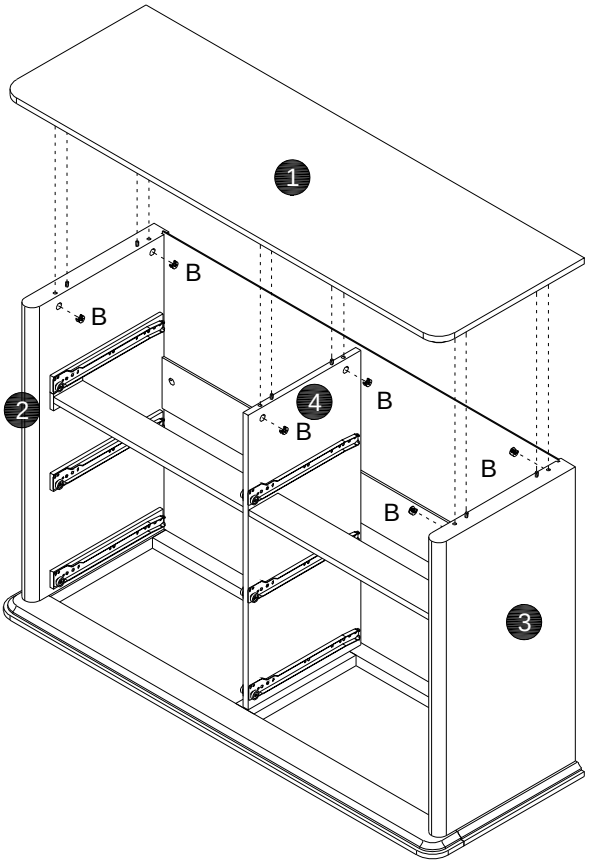

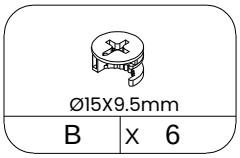

STEP 14

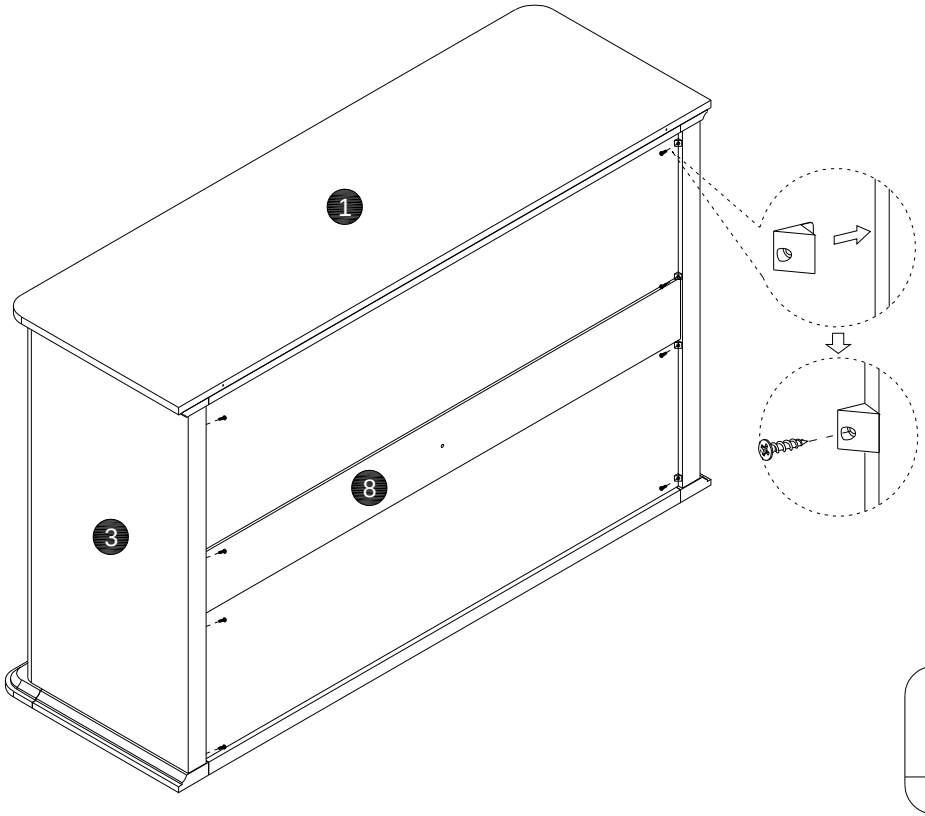

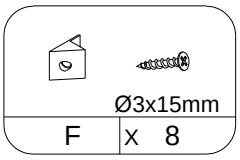

STEP 15

PF035

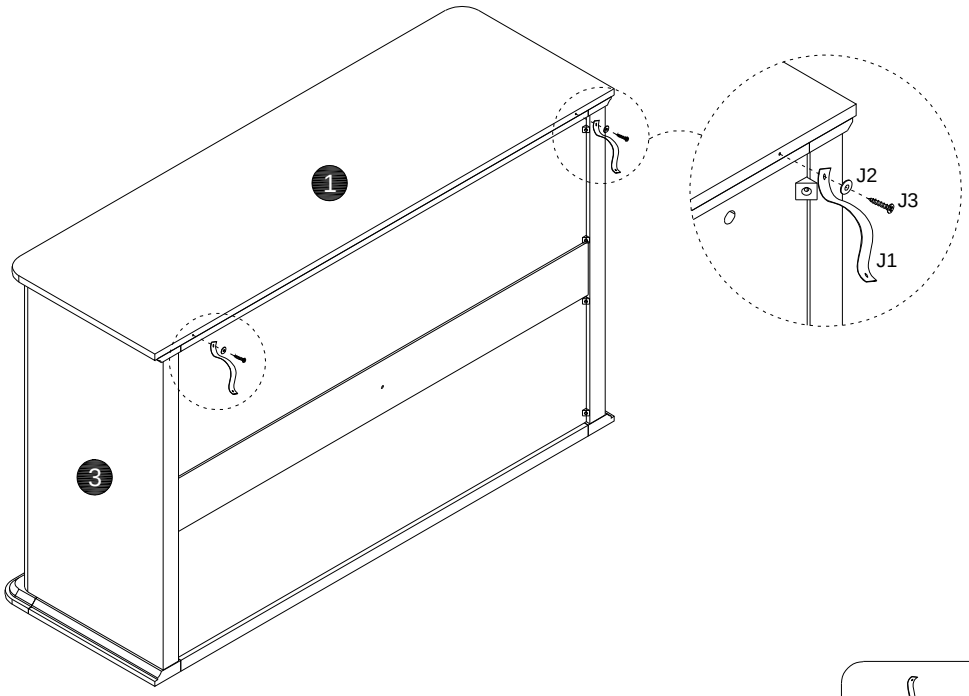

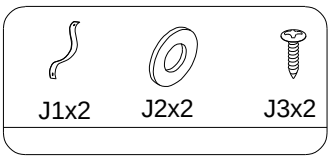

STEP 16

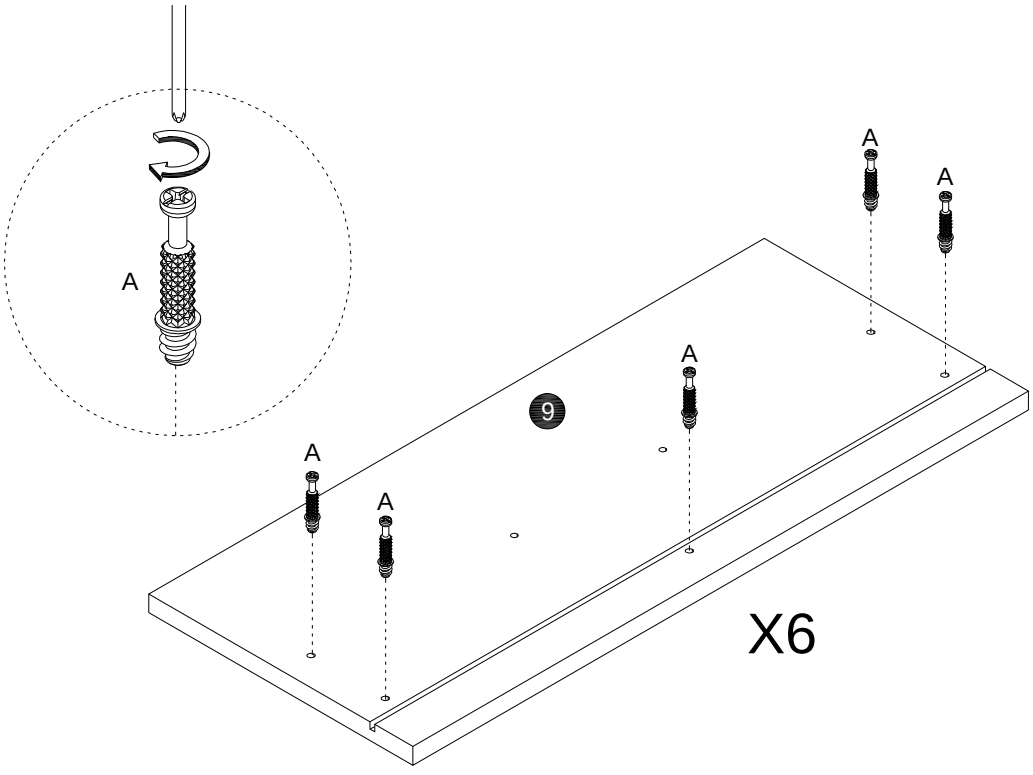

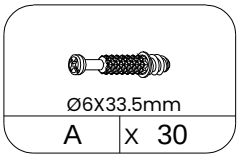

STEP 17

PF035

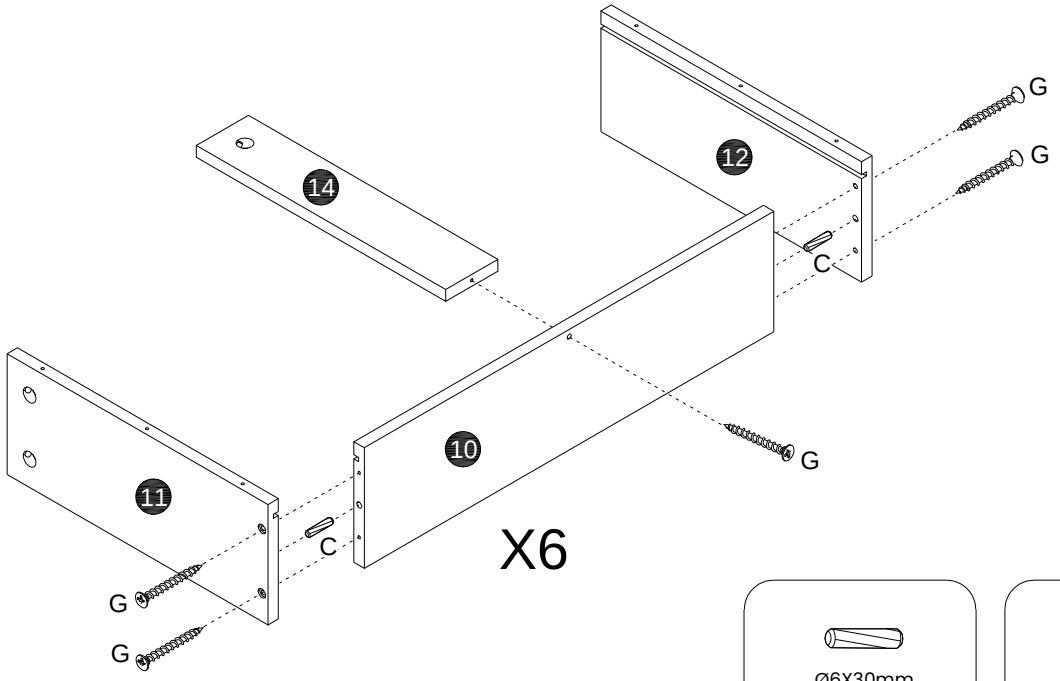

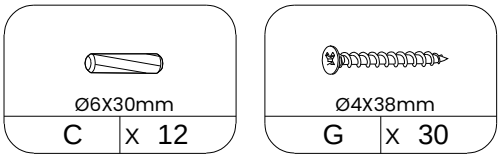

STEP 18

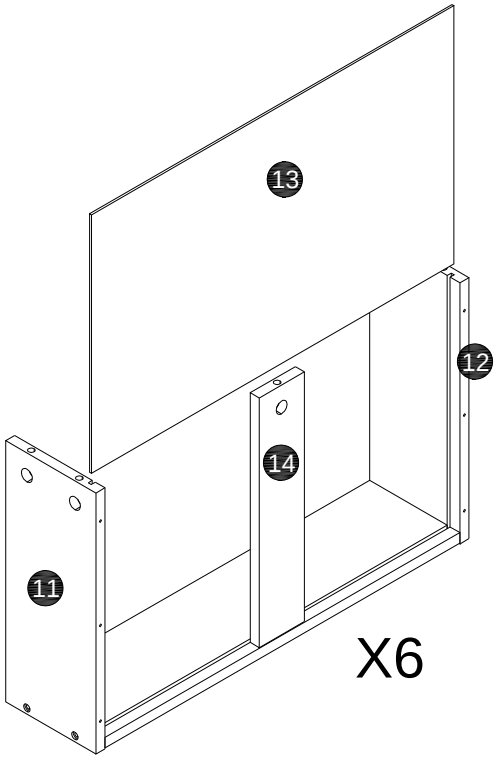

STEP 19

PF035

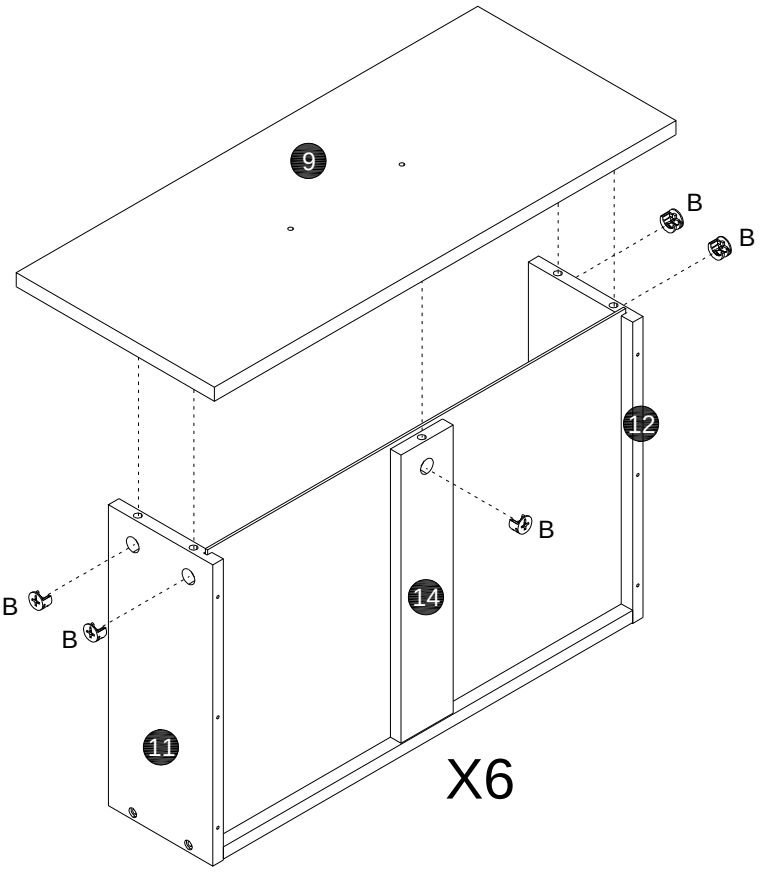

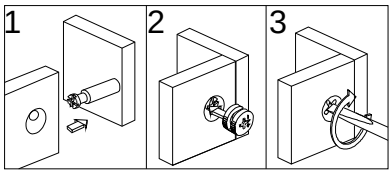

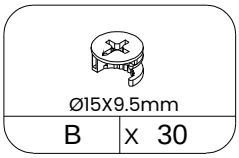

STEP 20

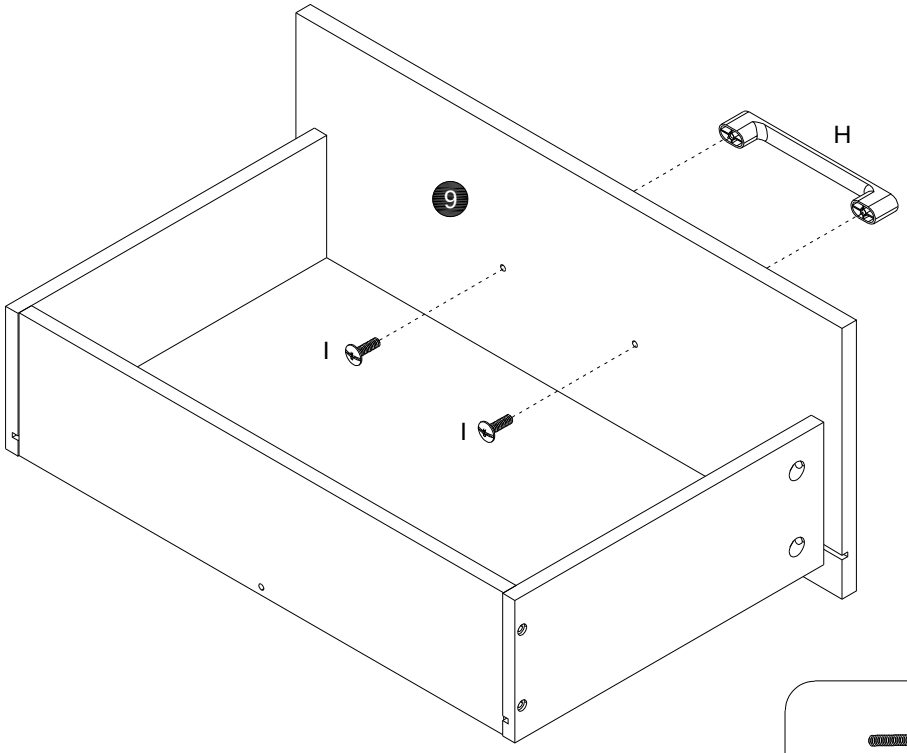

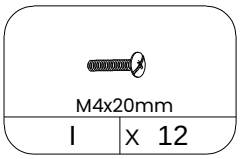

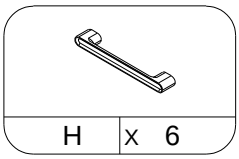

STEP 21

PF035

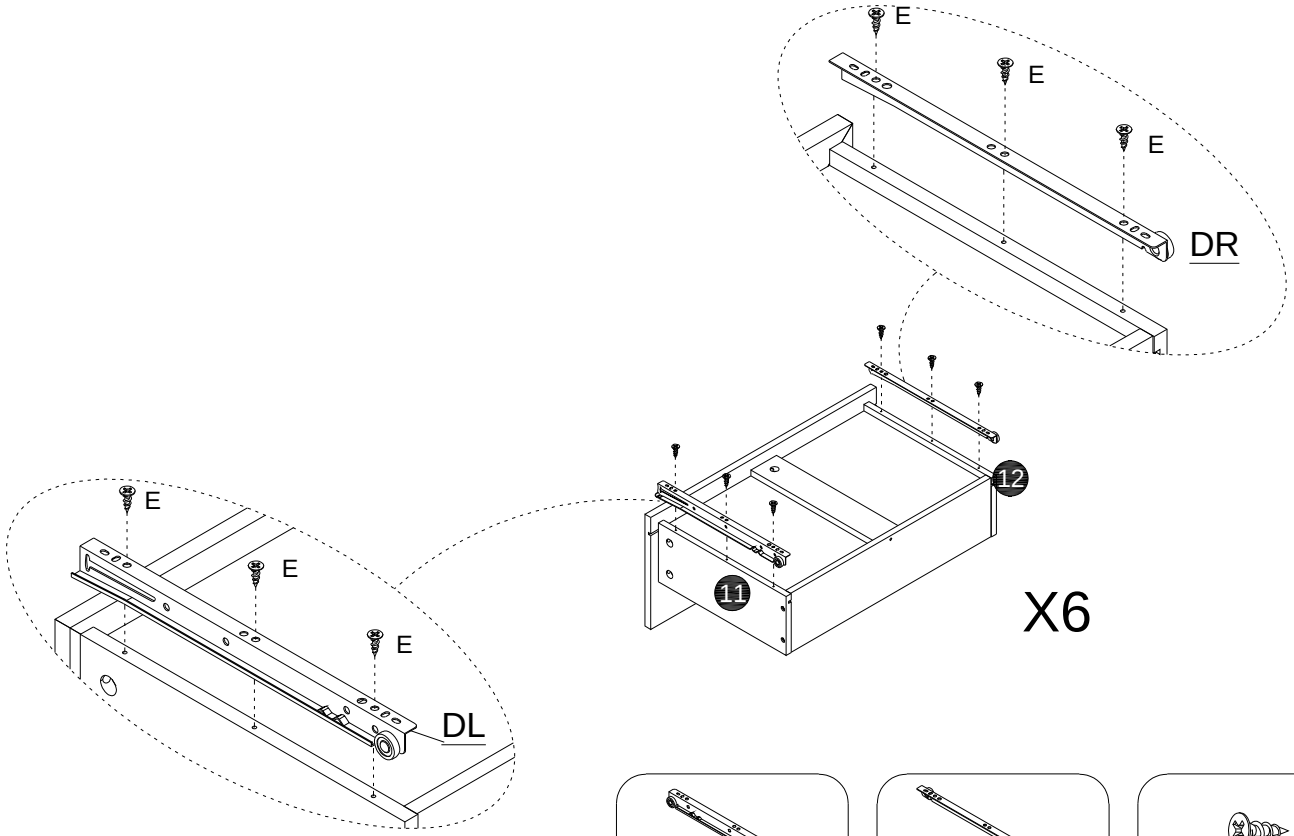

DR | X 6

DL | X 6



E | X 36

STEP 22

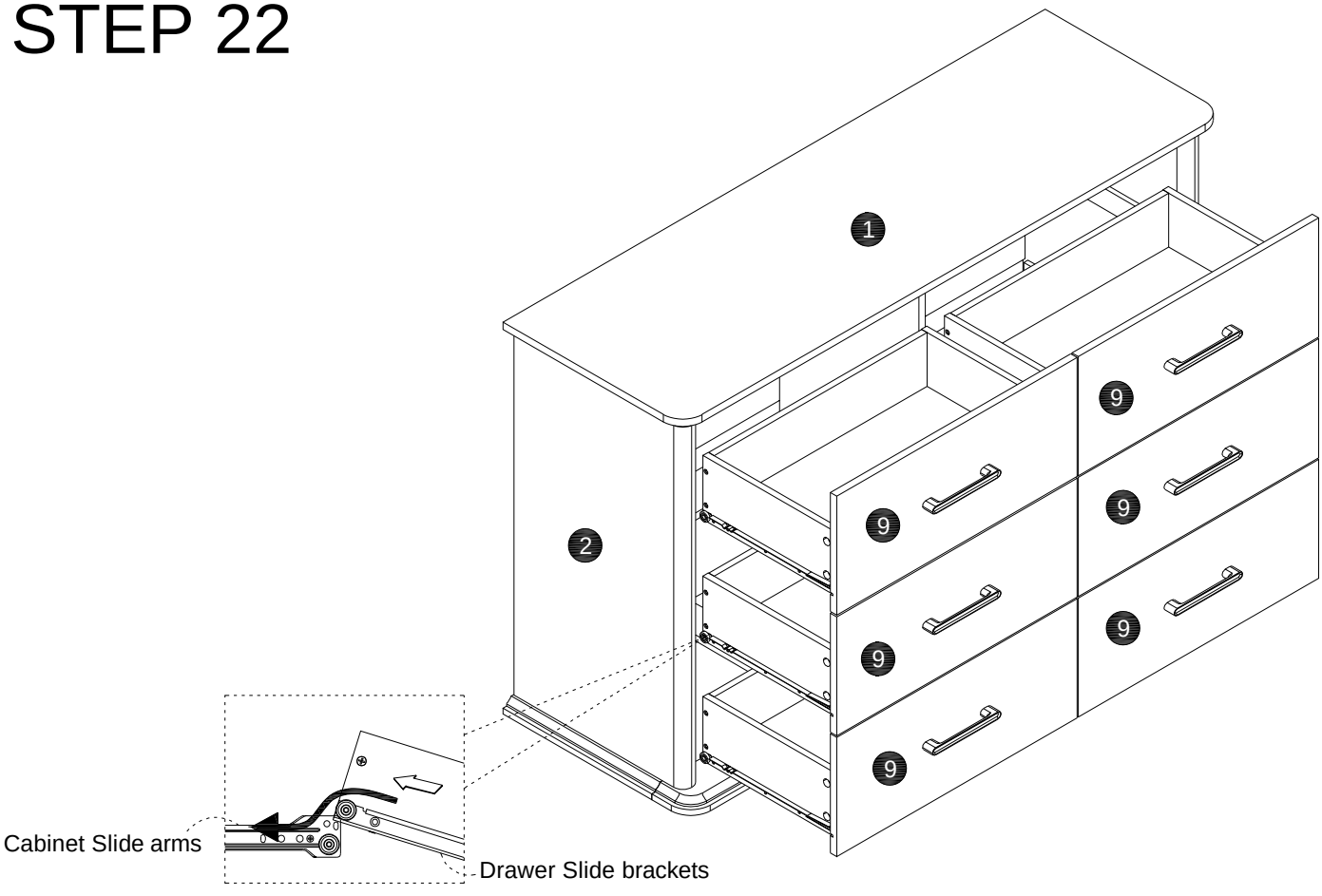

STEP 23

PF035

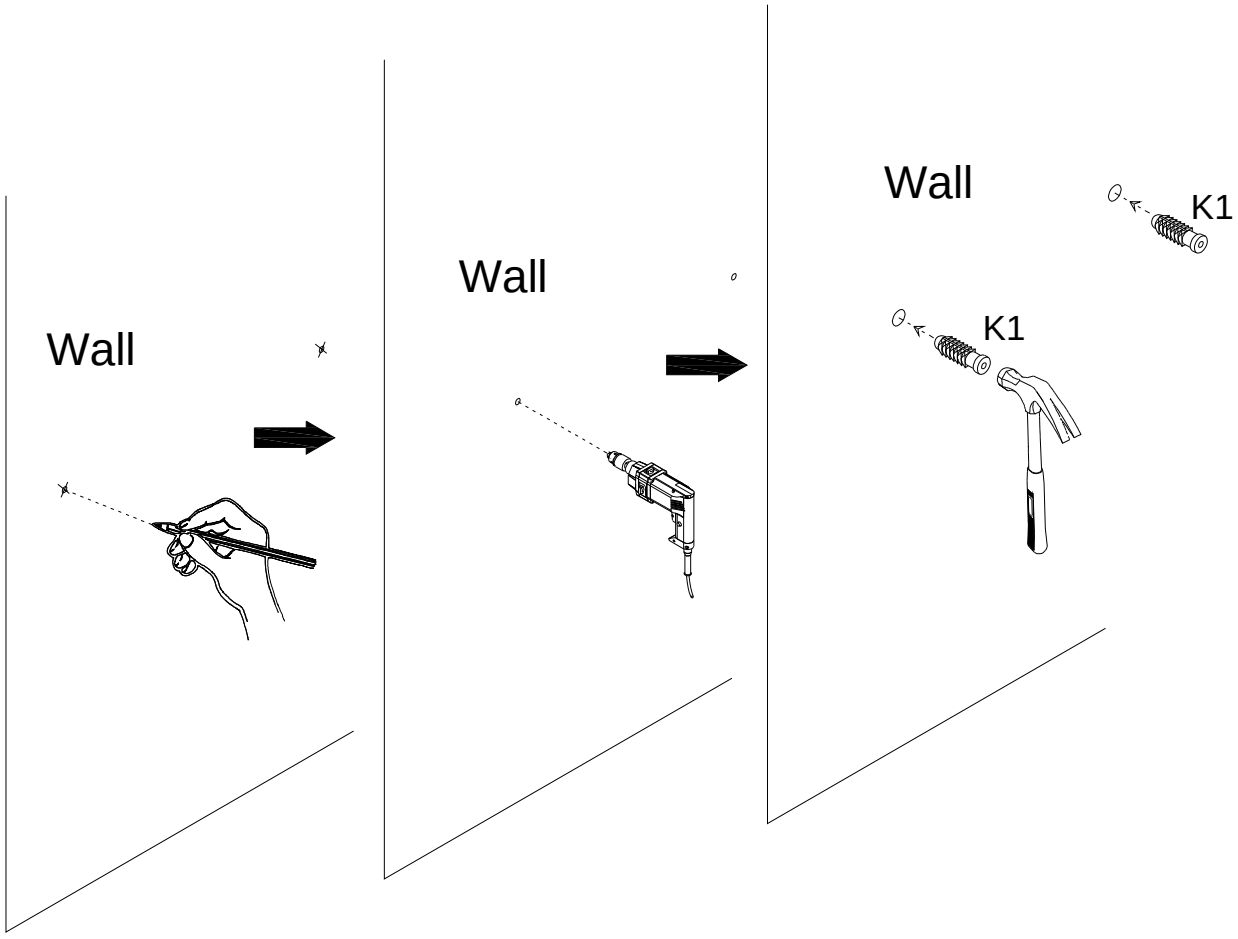

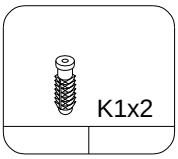

STEP 24

PF035

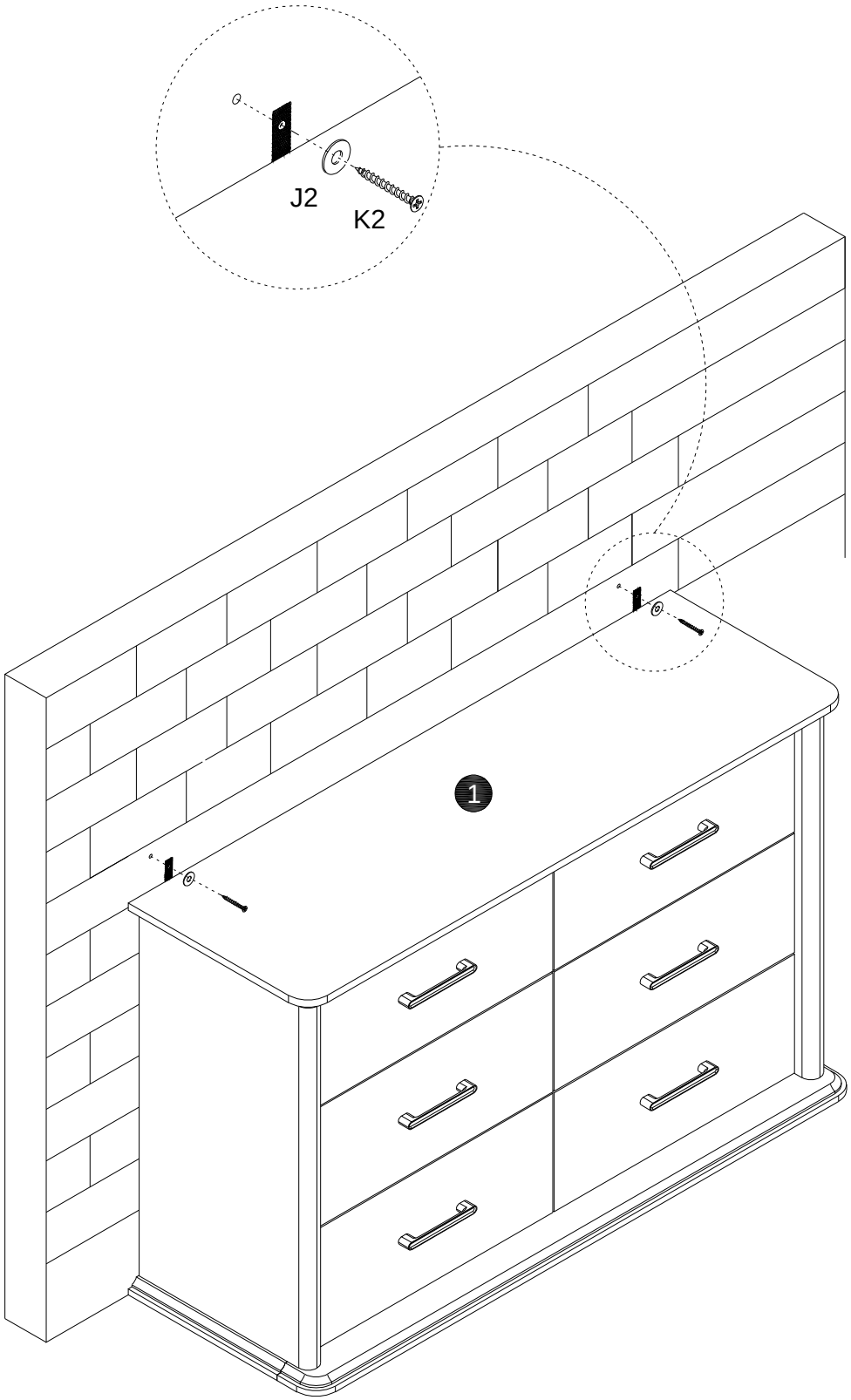

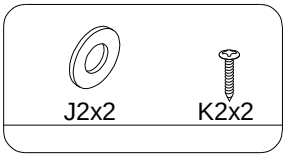

FURNITURE CARE AND MAINTENANCE

Medium - Density Fiberboard and Particle board

Thank you for your purchase. We want your item to last as long as possible. To ensure the product gives you years of service, please refer to this care and maintenance guide.



MAINTENANCE

· Tighten all bolts and screws again within the first 2 weeks of assembly
· Check the tightness of all bolts every 2 months, tighten them if necessary



CLEANING

· Clean the surface of the MDF (medium - density fiberboard) or PB (particle board) with a lightly dampened cloth.
· Small amount of mild soap can be used if necessary
- **Dry the surface immediately after cleaning.**

⚠ DO NOT use bleach or alcohol detergent to clean the surface.
⚠ DO NOT apply wood treatment on parts made with MDF and PB.
Medium - density fiberboard and Particle board will swell and distort when suffer from water damage.
Make sure to dry the furniture immediately after cleaning