Solitude

BFM31428C



Project:

Location:

Fixture Type:

Catalog Number:

DESCRIPTION

Luxuriously crafted and beautifully designed to add dramatic character to any space, a spear of Optic Haze® Quartz composed of natural quartz gemstone illuminates and gravitates with bolts of luminous energy.

FEATURES

- Optic Haze®® Quartz includes unique variations in luster, hue, and patterning
- 3CCT adjustability switch. Set from 3000K/3500K/4000K
- Driver concealed within the canopy

CRYSTAL OPTIONS



Optic Haze® Quartz (OH)

LINE DRAWING

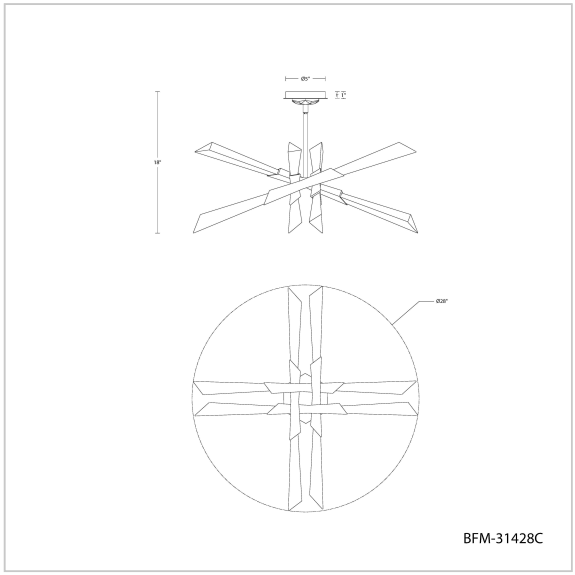

FINISH OPTIONS



Aged Brass (-AB)



Antique Nickel (-AN)

SPECIFICATIONS

Light Source	LED
Dimming	ELV,Triac
Standards	ETL/cETL, Title 24

REPLACEMENT PARTS

RPL-GLA-31236-01 - Crystal Canopy
RPL-GLA-31428-01 - Arm Crystal
RPL-ROD-IN12-AB - 12" Rod AB
RPL-ROD-IN12-AN - 12" Rod AN
RPL-ROD-IN06-AB - 6" Rod AB
RPL-ROD-IN06-AN - 6" Rod AN

Model	Crystal	Finish	Size	CCT	Voltage	Wattage	Weight	LED Lumens	Delivered Lumens
BFM31428C	OH	- AB - AN	28"	3000K/3500K/ 4000K/5000K	120V-277V	16W	8lbs	1400	Up To 900

Example: BFM31428C-AB

schonbek.com
Phone (800) 836.1892 | Fax: (518) 563.4228

Headquarters/Eastern Distribution Center
61 Industrial Blvd, Plattsburgh, NY 12901