User Manual

Ceiling Fan

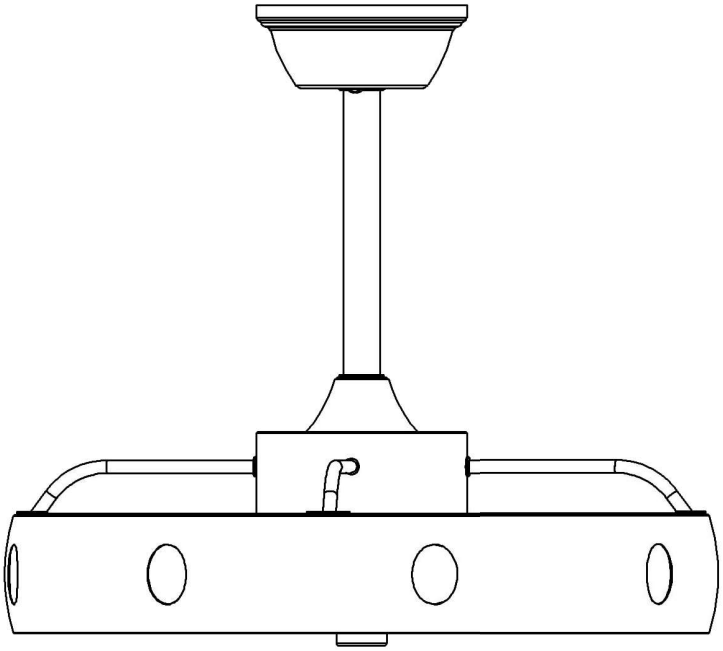

SAFETY INFORMATION

1. To reduce the risk of electric shock, ensure electricity has been turned off at the circuit breaker or fuse box before beginning.
2. The installation is to be in accordance with the National Electrical Code,ANSI/NFPA 70 and local codes . Electrical installation should be performed by a qualified licensed electrician.
3. **CAUTION:** Read all instructions and safety information before installing your new fan. Review accompanying assembly diagrams.
4. **WARNING: To reduce the risk of electrical shock and fire, do not use this fan with any solid-state fan speed control device.**
5. **WARNING: To reduce the risk of fire, electric shock, or personal injury, mount to UL Listed outlet box marked "acceptable for fan support of 15.9 kg (35 lbs) or less" and use mounting screws provided with the outlet box. Most outlet boxes commonly used for the support of light fixtures are not acceptable for fan support and may need to be replaced. Due to the complexity of the installation of this fan, a qualified licensed electrician is strongly recommended.**
6. **WARNING: To reduce the risk of fire, electric shock, or personal injury. Do not use replacement parts that have not been recommended by the manufacturer (e.g. parts made at home using A 3D printer)**
7. The fan must be mounted with a minimum of 2.3 m clearance from the trailing edge of the blades to the floor.The tip of the fan blade to the nearest wall obstruction: 30 inches.
8. **WARNING: Avoid placing objects in the path of the blades.**
9. To avoid personal injury or damage to the fan and other items, be cautious when working around or cleaning the fan.
10. Do not use water or detergents when cleaning the fan or fan blades. A dry dust cloth or lightly dampened cloth will be suitable for most cleaning.
11. After making electrical connections, spliced conductors should be turned upward and pushed carefully up into outlet box. The wires should be spread apart with the grounded conductor and the equipment grounding conductor on one side of the outlet box and the ungrounded conductor on the other side of the outlet box.
12. Electrical diagrams are for reference only. Light kits that are not packed with the fan must be UL and cUL Listed and marked suitable for use with the model fan you are installing. Switches must be UL and cUL General Use Switches. Refer to the Instructions packaged with the light kits and switches for proper assembly.
13. NOTE: Suitable for use in damp locations. Use only with light kits marked "Suitable for use in damp locations."
14. Do not wait for the fan to stop before pressing the reverse button. The fan will not reverse direction if the fan is not moving.
15. **WARNING: To reduce the risk of fire, electric shock, or personal injury. Do not use this fan with any solid-state speed control device.**
16. Check that the outlet box is securely installed in place such that it is able to support at least than fan weight 5.1KG.
17. The appliance is not intended for use by persons (including children) with reduced physical, sensory or mental capabilities, or lack of experience and knowledge, unless they have been given supervision or instruction concerning use of the appliance by a person responsible for their safety.
18. Children should be supervised to ensure that they do not play with the appliance.
19. All set screws must be checked, and re-tightened where necessary , before installation.
20. **WARNING: If unusual oscillating movement is observed, immediately stop using the ceiling fan and contact the manufacturer, its service agent or suitably qualified persons.**
21. The outlet box and support structure must be securely mounted and capable of reliably supporting a minimum of 15.9 kg (35 lbs). Use only UL listed outlet boxes marked "acceptable for fan support of 15.9 kg (35 lbs) or less."
22. That the mounting of the suspension system shall be performed by the manufacturer, its service agent or suitably qualified persons.
23. The fixing means for attachment to the ceiling shall be fixed with a sufficient strength to withstand 4 times the weight of the ceiling fan.

WARNING: TO REDUCE THE RISK OF FIRE, ELECTRIC SHOCK, OR PERSONAL INJURY. DO NOT USE THIS FAN WITH ANY SOLID-STATE SPEED CONTROL DEVICE.

WARNING: TO REDUCE THE RISK OF PERSONAL INJURY, DO NOT BEND THE BLADE ARMS (ALSO REFERRED TO AS FLANGES), WHEN INSTALLING THE BRACKETS, BALANCING THE BLADES OR CLEANING THE FAN.

READ AND SAVE THESE INSTRUCTIONS.

PACKAGE CONTENTS

- Safety
- Tools Needed
- Hardware Included
- Fan Assembly
- Electrical Connections
- Fan Blade Installation
- Light Kit Installation
- Fan Operation
- Troubleshooting

TOOLS NEEDED

- Phillips screwdriver
- Flathead screwdriver
- Step ladder
- Wire cutter

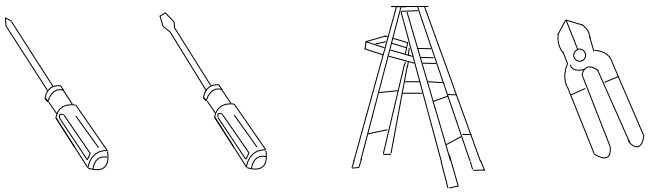

HARDWARE INCLUDED

- Bracket Mounting Hardware
  - wood screws **(1a)**
  - screws **(1b)**
  - wire nuts **(1c)**
  - lock washers **(1d)**
  - flat washers **(1e)**
- Fan Mounting Hardware
  - cotter pin **(2a)**
  - clevis pin **(2b)**

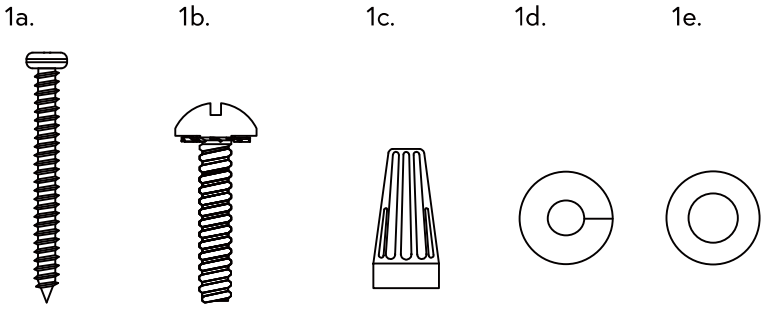

PACKAGE CONTENTS

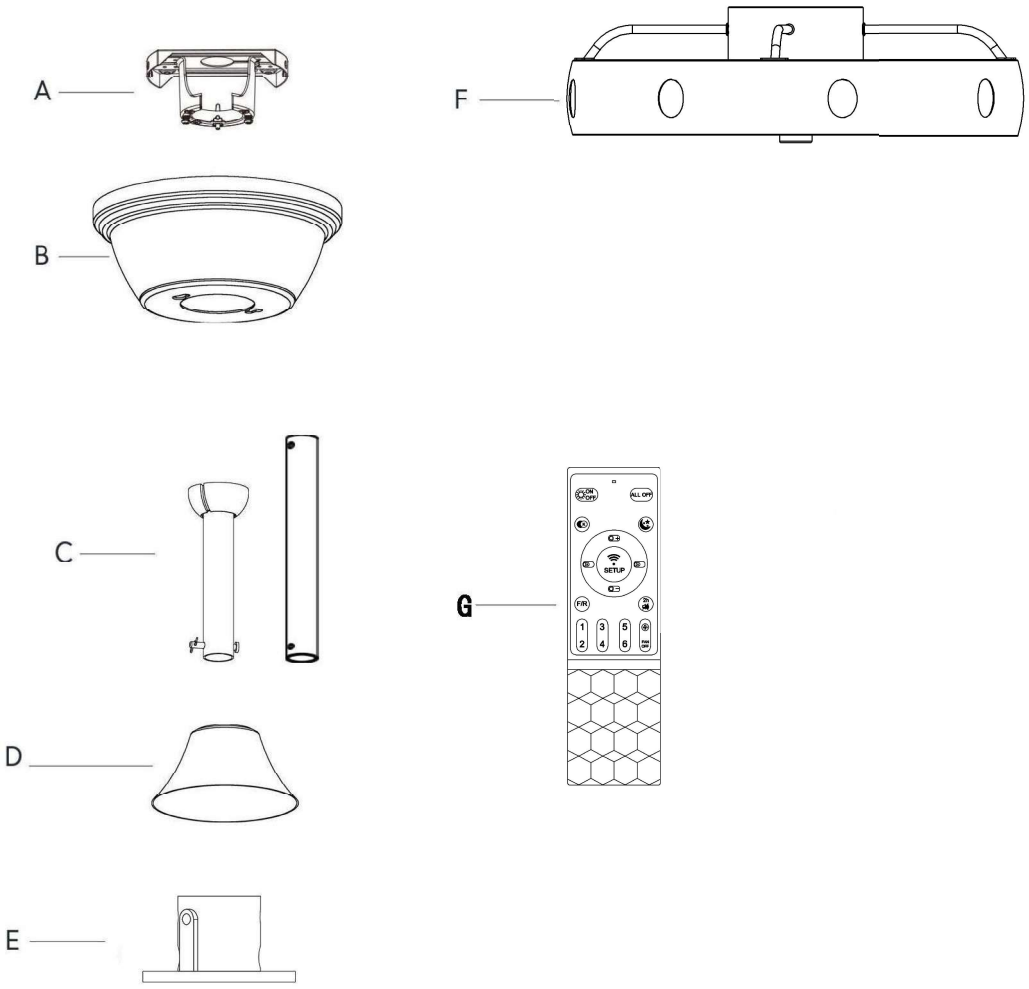

Part	Description	Quantity
A	Mounting bracket	1
B	Canopy	1
C	Hanger ball/downrod assembly	2
D	Coupling cover	1
E	**Boom connection component**	1
F	Fan motor assembly	1
G	Remote control	1

PREPARING THE MOUNTING HARDWARE

Outlet Box Mounting Options

If there isn't an existing UL Listed octagonal mounting box marked "Acceptable for Fan Support" follow the instructions below. (**REMINDER**: an electrical junction box for use with luminaires is not acceptable for this application)

- Before you begin installing the mounting box, shut off the power at the circuit breaker of the fuse box.
- Secure the box directly to the building structure. The figures below show 3 example methods.

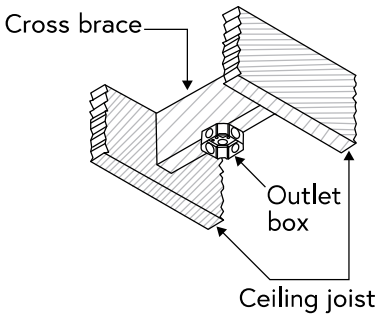

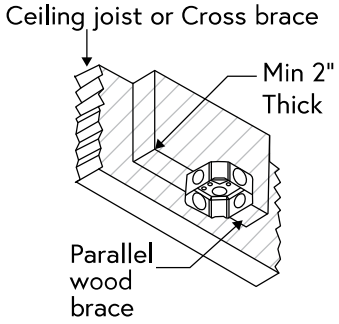

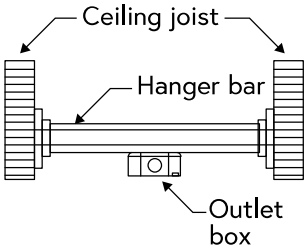

INSTALLING THE HANGING BRACKET

CAUTION: TO AVOID POSSIBLE ELECTRICAL SHOCK, BE SURE ELECTRICITY IS TURNED OFF AT THE MAIN POWER BOX BEFORE WIRING. ALL WIRING MUST BE IN ACCORDANCE WITH NATIONAL AND LOCAL ELECTRICAL CODES AND THE CEILING FAN MUST BE GROUNDED AS A PRECAUTION AGAINST POSSIBLE ELECTRIC SHOCK.

1. Loosen the two mounting screws in the outlet box. Pass the 120-Volt supply wires through the center hole in the slide-on mounting bracket .
2. Slide the slide-on mounting bracket on to the mounting screws and center the slide-on mounting bracket in relation to the outlet box. If necessary, use leveling washers (not included) between the slide-on mounting bracket and the outlet box. The flat side of the slide-on mounting bracket should face toward the outlet box, as shown.
3. Securely tighten the two mounting screws.

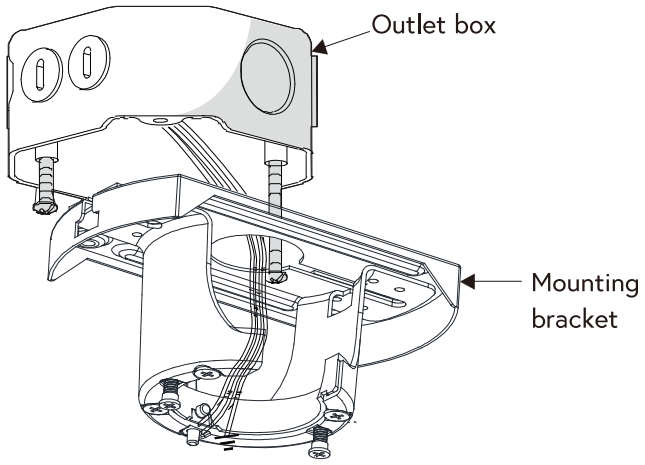

1.Remove the six screws from the fan motor assembly

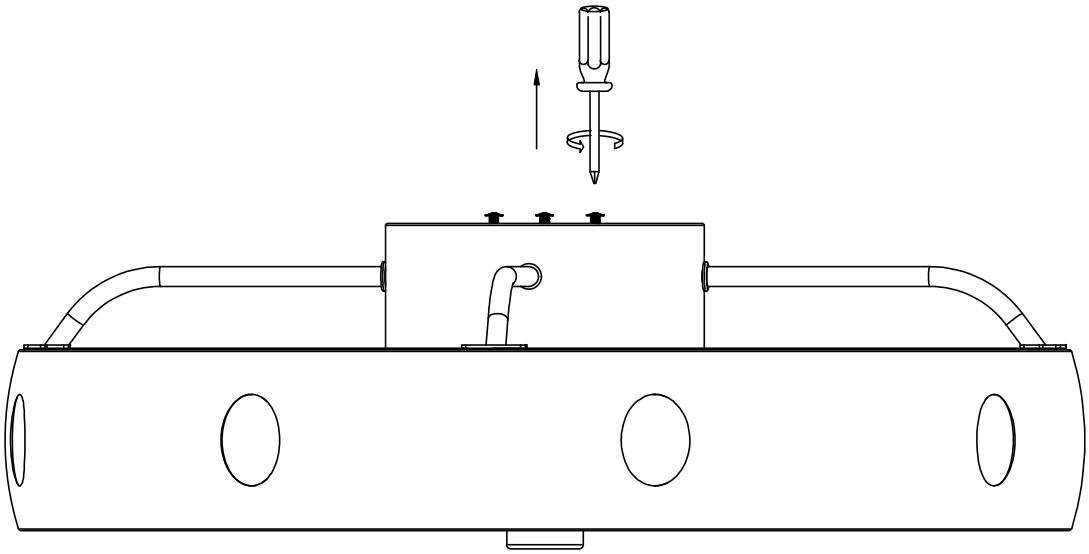

2.RInsert the removed screw through the Boom connection component and tighten it into the fan motor assembly to secure it

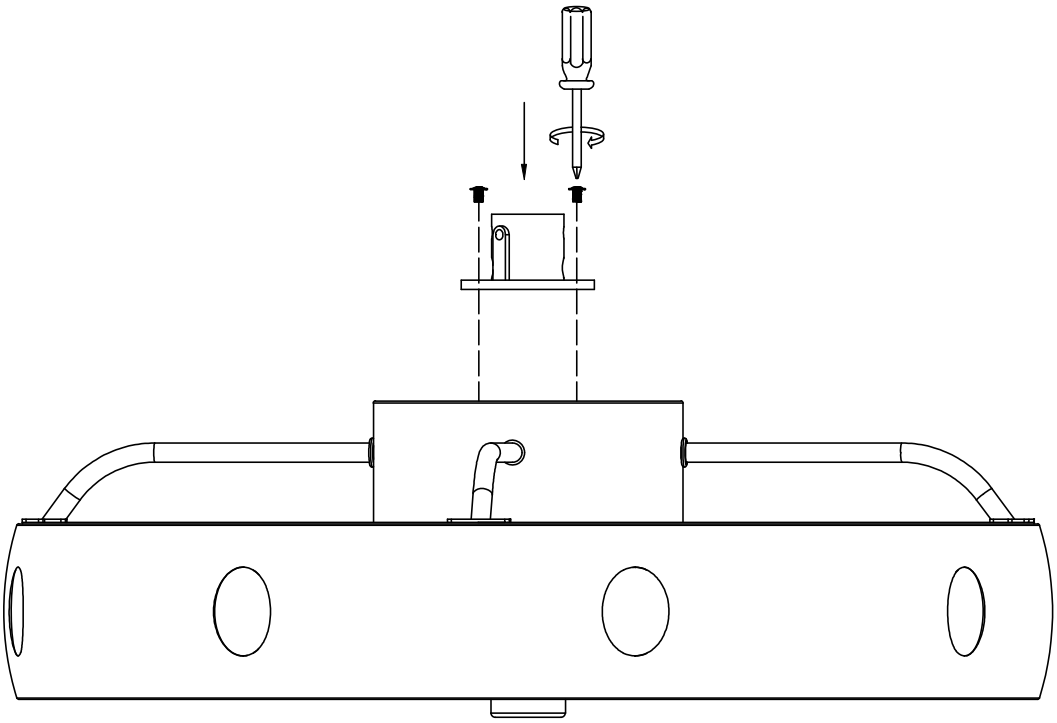

PREPARING THE MOTOR

1. Loosen the set screw in the hanger ball assembly untl the hanger ball slides off the downrod.
   Remove the pin from the downrod, then remove the hanger ball. Retain the pin and hanger ball for einstallation in Step 6.(Figure 1)
2. Removethe hairpin clip and clevis pin fromthe bottom of the downrod.
   Keep the pin and clip for reinstallation in Step 4. (Figure 2)
3. Loosen the two set screws in the motor assemdly's downrod support.
   Thread the power cord of the receiver through the lower pull rod. (Figure 3)

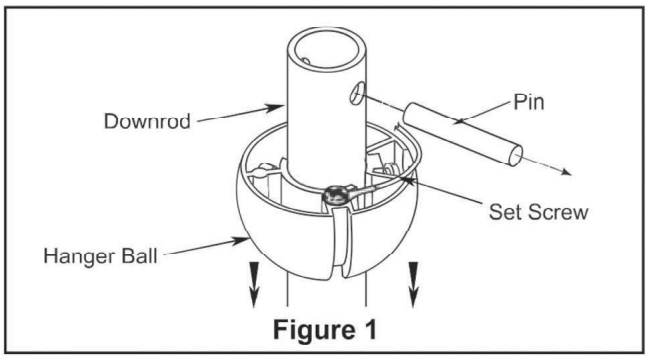

Figure 1

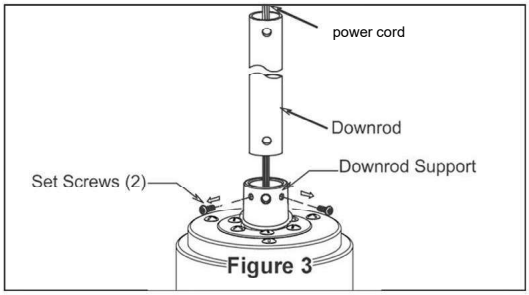

Figure 3

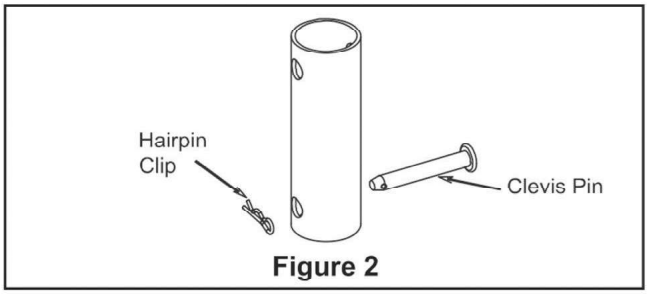

Figure 2

ASSEMBLING THE FAN

WARNING: Failure to properly install the cotter pin could result in the fan becoming loose and possibly falling.

1. Thread the downrod into the downrod support on top of the motor. Insert the clevis pin, ensuring the holes in the downrod support align with those in the downrod. Secure the pin withthe hairpin clip.Tighten the two set screws in the downrod support.(Figure 4)
2. Route wires through motor coupling cover, and ceiling canopy.(Figure 5)
3. Reinstall the globe
   1. Pass the black and white wires through the hanging ball.
   2. Pass the pin through the two holes on the lower rod.
   3. Align the ball so that the pin can be firmly inserted into the slot at the top of the ball.
   4. Tighten the globe of the suspension against the pin and securely fasten the fixing screws. Note: Loose fastening screws may cause the fan to wobble. (Refer to Figure 6)

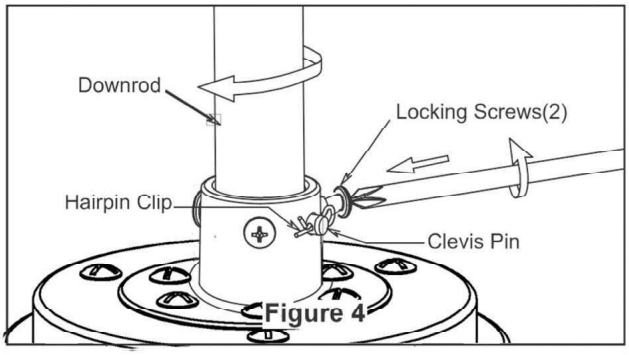

Figure 4

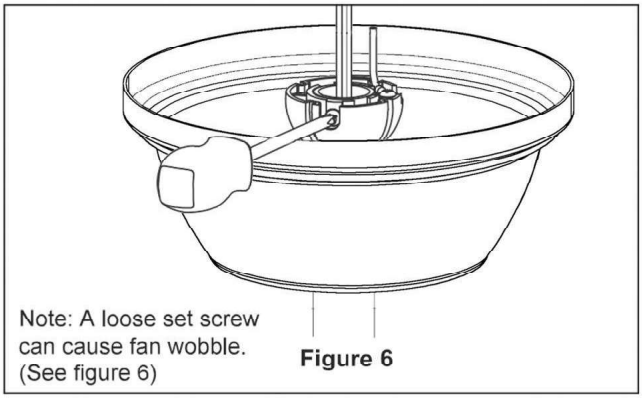

Figure 6

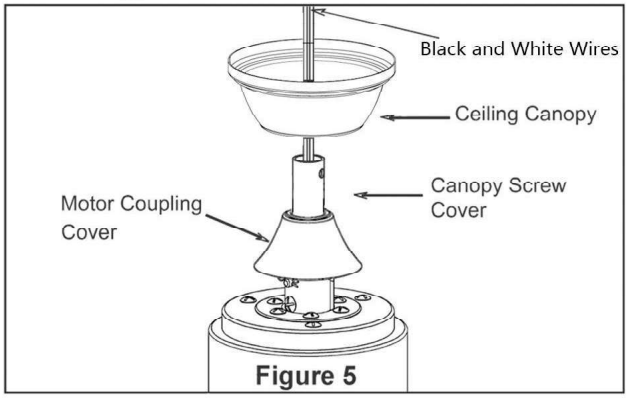

Figure 5

WARNING: The tab in the ring must rest in the groove of the hanger ball/downrod assembly. Failure to properly seat the tab in the groove could cause damage to the wiring.

1. Carefully lift the fan motor assembly up to the mounting bracket and seat the hanger ball/downrod assembly in the mounting bracket socket. Make sure the tab on the mounting bracket socket is properly seated in the groove in the hanger ball/downrod assembly. This will help to balance the ceiling fan.

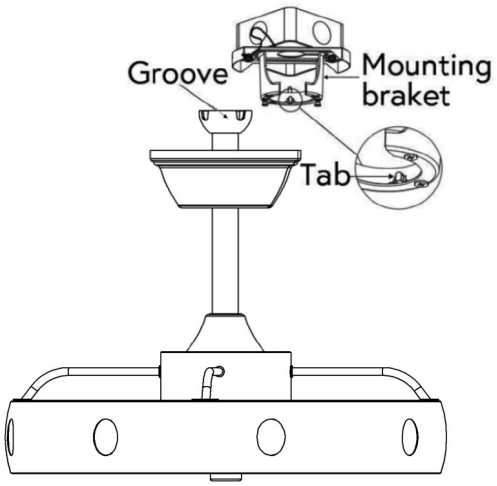

WIRING YOUR CEILING FAN

Note: If you lack electrical wiring experience, consult a licensed electrician for installation.

The driver and receiver have been pre-installed, so no additional installation is required.

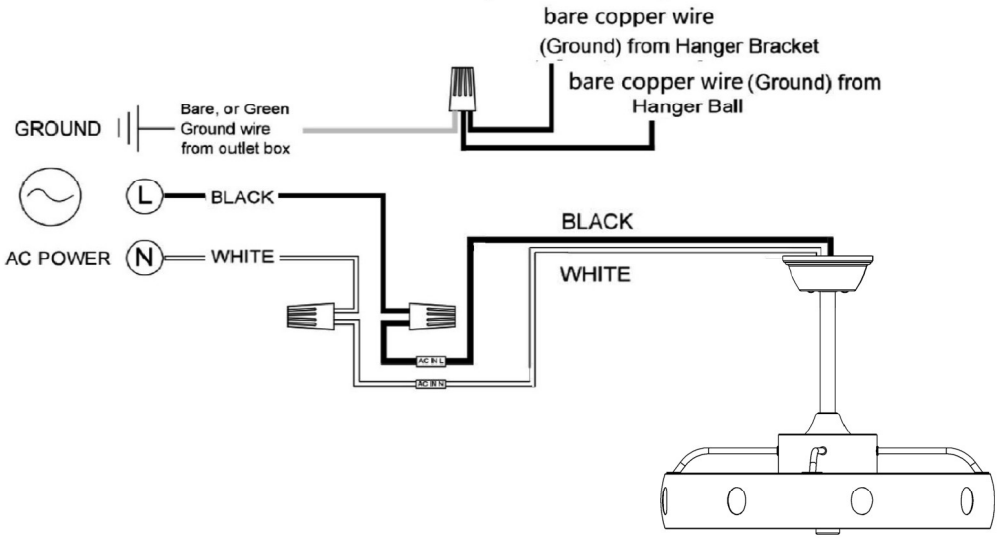

Figure 1

- ☐ Connect the bare copper grounding wires of the hanger and lower pull rod to the ceiling, which are already grounded.
- ☐ Connect the black wire on the receiver to the black wire on the power cord
- ☐ Connect the white wire on the receiver to the white wire on the power cord

HARDWARE USED:

WIRE CONNECTORS x 3

NOTE:
If you feel that you do not have enough electrical wiring knowledge or experience, have your fan installed by a licensed electrician.

INSTALLING THE CANOPY

WARNING: When using the standard ball/downrod mounting, the tab in the ring at the bottom of the mounting bracket must rest in the groove of the hanger ball. Failure to properly seat the tab in the groove could cause damage to the wiring.

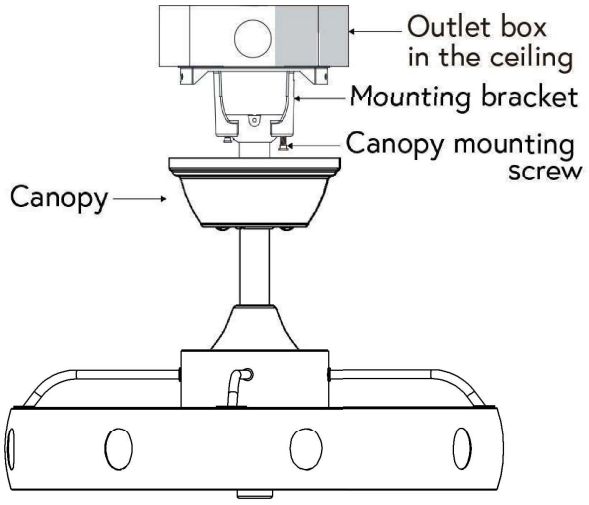

1. Align the locking slots of the canopy with the two screws and alignment post (in the slide-on mounting bracket).
2. Push up the canopy and turn it until the alignment post engages to the round hole and the screws engage to the key slots.
3. Firmly tighten the two mounting screws.

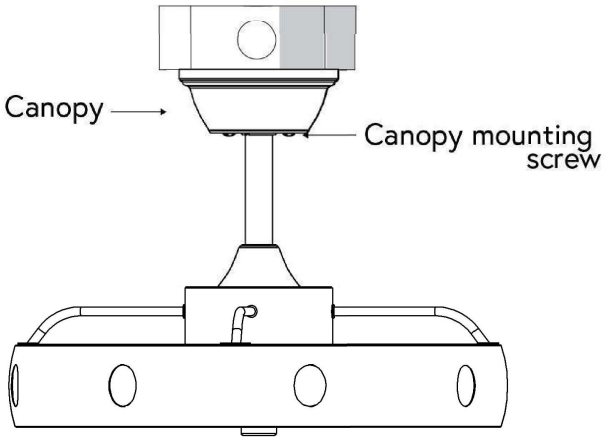

INSTALLING THE REMOTE CONTROL HOLDER

1. Remove the remote control bracket from the remote control

2. Attach the remote control holder with the two control holder mounting screw provided.

3. Replace the remote control holder cover into remote control .

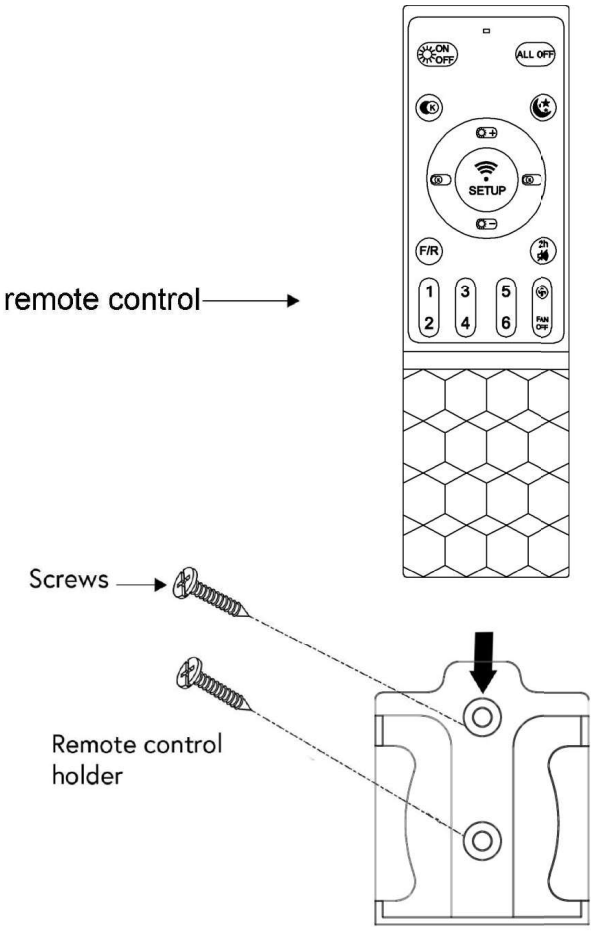

OPERATION

IMPORTANT: If you have two or more fans,please follow steps below to control each fan independently.Also follow steps below to re-pair the remote and the receiver when needed

Install battery(not included).To prevent damage to transmitter remove the battery if not used for long periods of time.

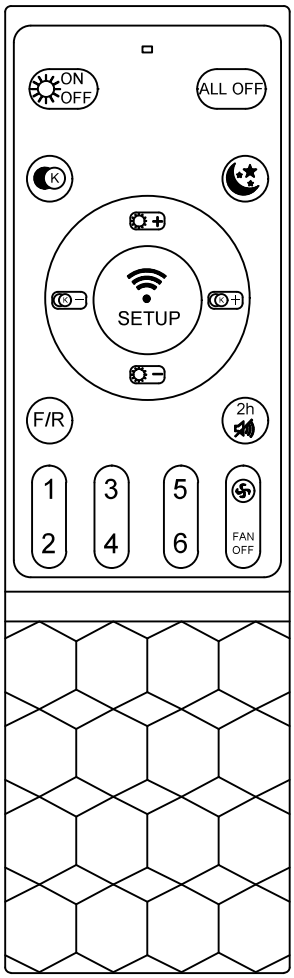

ALL OFF	Turn off the fan and lights, and press and hold to clear the code
ON OFF	Turn on/off the lights.
K	Switch color temperature
	sleep mode
K +	enhances color temperature
K −	reduces the color temperature
	enhances brightness
	reduce brightness
SETUP	Press and hold within 5 seconds after power-on The flashing lights indicate that the code is complete
F/R	sets fan direction forward or reberse.
2h	Short press to set a 2-hour timer, long press to turn off the beep sound
1-6 buttons	1/2/3/4/5/6 for fan speeds.
	Long press natural wind
FAN OFF	Turn off the fan

NOTE:
Please insert 2 batteries before using. AAA 1.5V battery x 2pcs (not included).

If the pairing is successful, the lighting kit of the fan will flash.

NOTE:If the self calibration test failed, turn the AC power off；restore power and process the self calibration test again.

OPERATION (continued)

NOTE: The learning frequency function and self calibration test will continue to retain the last set frequency and calibration set even when the AC power is shut off. If the frequency is changed the self calibration test will occur again.

This receiver provides the following protective function:

1. Lock Rotor Position: The DC motor has a built-in safety against a stalled or locked rotor condition (stalled blade rotation). If there is an obstruction or fault with the motor, the current monitoring function will automatically turn power off to the motor after 30 seconds. Remove the obstruction and turn the AC power off. Restore power and re-start fan motor.
2. Over 80W protection: When the receiver detects motor power consumption which is greater than 80W, the receiver power will be stopped and operation will immediately discontinue. Wait for 5 seconds and then turn the receiver power back on.

Summer Mode and Winter Mode Operation

Speed settings for warm or cold weather depend on factors such as room size, ceiling height and number of fans.

Summer Mode (forward):

A DOWNWARD airflow creates a cooling effect. This allows you to set your air conditioner on a warmer setting without affecting your comfort.

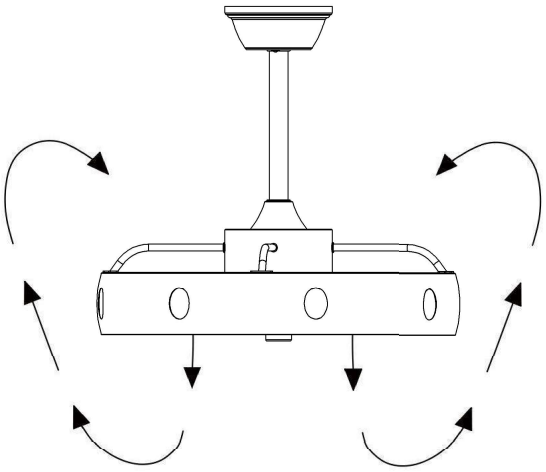

Winter Mode (reverse):

A UPWARD airflow moves warmer air off the ceiling area. This allows you to set your heating unit on a cooler setting without affecting your comfort.

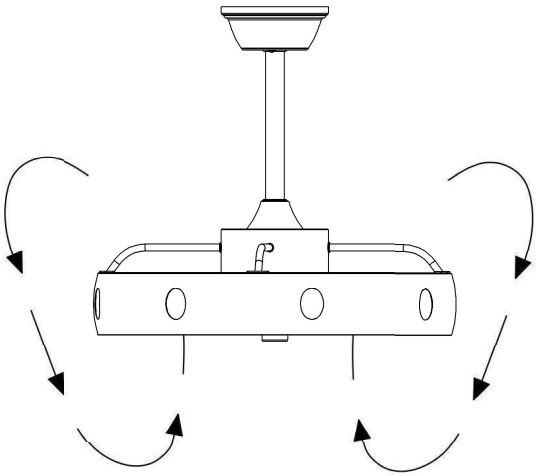

OPERATING CEILING FAN WITH THE APP

1. Download the app

- Using your smart device, navigate to the application store (Apple App Store or Google Play).

2. Connect to the receiver

NOTE: Confirm that your smart device (phone/tablet) is connected to your WiFi network before proceeding.

- Ensure the fan and receiver are receiving power from the house supply by using the remote control to turn the fan and light on and off.

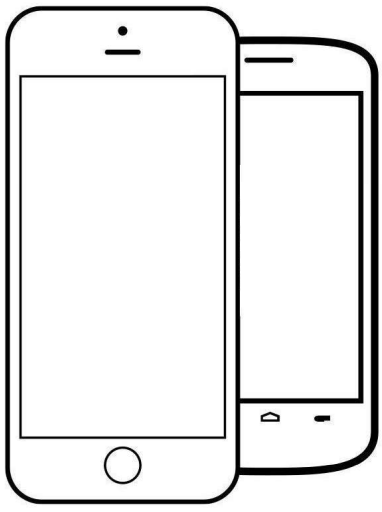

CARE AND CLEANING

- Make sure the power is off before cleaning .and it is recommended to clean the fan once a year.
- Periodically it may be necessary to re-tighten blade to blade arm screws or blade arm to motor screws to prevent clicking or humming sound during operation. This is especially true in climates with broad temperature and humidity ranges.
- When dusting the blades, you must support the blade to prevent bending - no pressure should be applied to the blades. If you experience any flaws in the operation of your fan, please check the following points.

TROUBLESHOOTING

PROBLEM	SOLUTION
FAN WILL NOT START	**1.** Check circuit fuses or breakers. **2.** Check wall control LED indicator light. If LED is not illuminated when pushing a button, it is not transmitting a signal. Please check battery, power to wall control/circuit breaker and all electrical connections. **3.** Assure there are no more than 2 fans operating on a circuit through the wall control. Assure that there are no more than 12 fans operating on a circuit through an on/off wall switch or a breaker (not through a wall control). **4.** Assure that the fan is within range of the wall control (30 ft.).
FAN SOUNDS NOISY	**1.** Allow a 24-hour "breaking-in" period. Most noise associated with a new fan will disappear during this time. **2.** Make sure all motor housing screws are securely fastened. **3.** Make sure the screws that attach the fan blade to the fan are tight. **4.** Make sure your ceiling box is secure and rubber isolator pads are used between the mounting bracket and outlet box.
FAN WOBBLES	**1.** Check that all blade to motor and blade arm screws are secure. **2.** If the blade wobble is still noticeable, interchanging two adjacent (side by side) blades can redistribute the weight and possibly result in smoother operation. **3.** Make sure the mounting plate is securely fastened to the ceiling outlet box. **4.** Make sure ceiling box is secure.