CORNER CABINET

ASSEMBLY INSTRUCTIONS

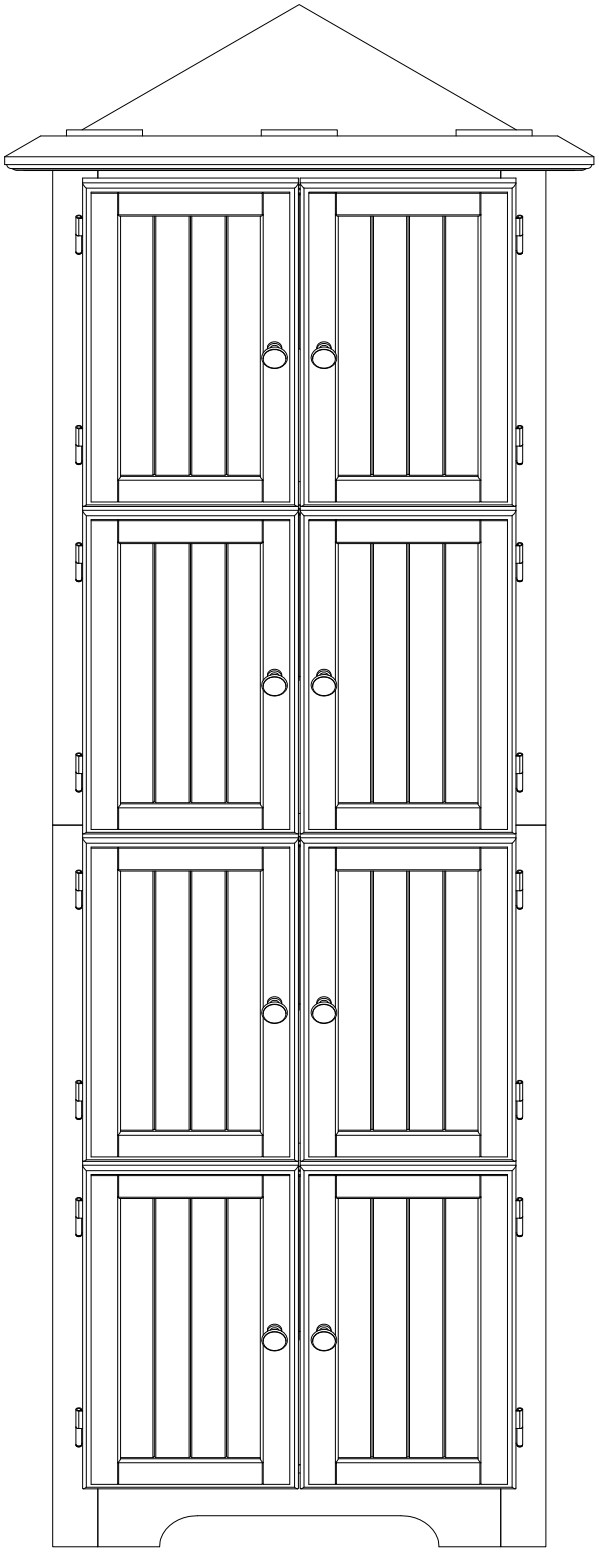

MADE IN CHINA

Part List:

ITEM	DESCRIPTION	PART	QTY
1	Top	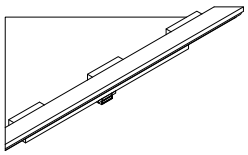	1
2	Shelf	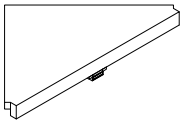	2
3	Middle panel	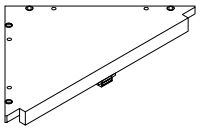	1
4	Bottom	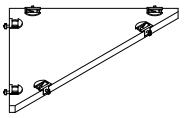	1
5	Apron	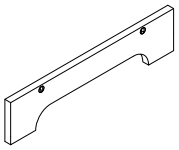	1
6	Upper left side	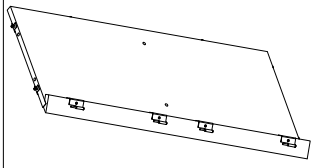	1

Part List:

ITEM	DESCRIPTION	PART	QTY
7	Upper right side	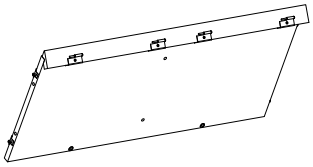	1
8	Lower left side	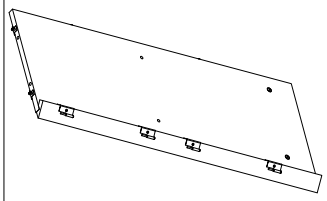	1
9	Lower right side	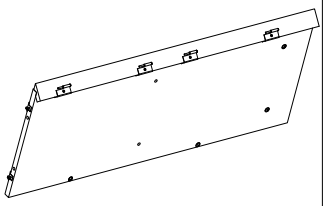	1
10	Left door	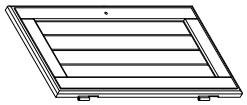	4
11	Right door	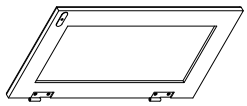	4

Hardware List:

ITEM	DESCRIPTION	PART	QTY
A	Short wooden dowel	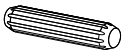 Φ8*30mm	12
B	Long wooden dowel	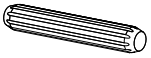 Φ8*40mm	4
C	Plastic anchor		1

Hardware List:

ITEM	DESCRIPTION	PART	QTY
D	Mounting screw	 Φ4*38mm	1
E	Flat washer		1
F	Knob		8

* Required screwdriver & mallet, not included.
* Before discarding packing materials, please check to make sure that all parts and hardware is present.
* Two people needed for assembly.
* Please follow the instructions closely; do not over tighten screws or bolts unless instructed.
* After a few days from initial assembly, the product may have acclimated to the new environment. Please retighten the hardware.

Guideline For Assembling of Plastic Lock

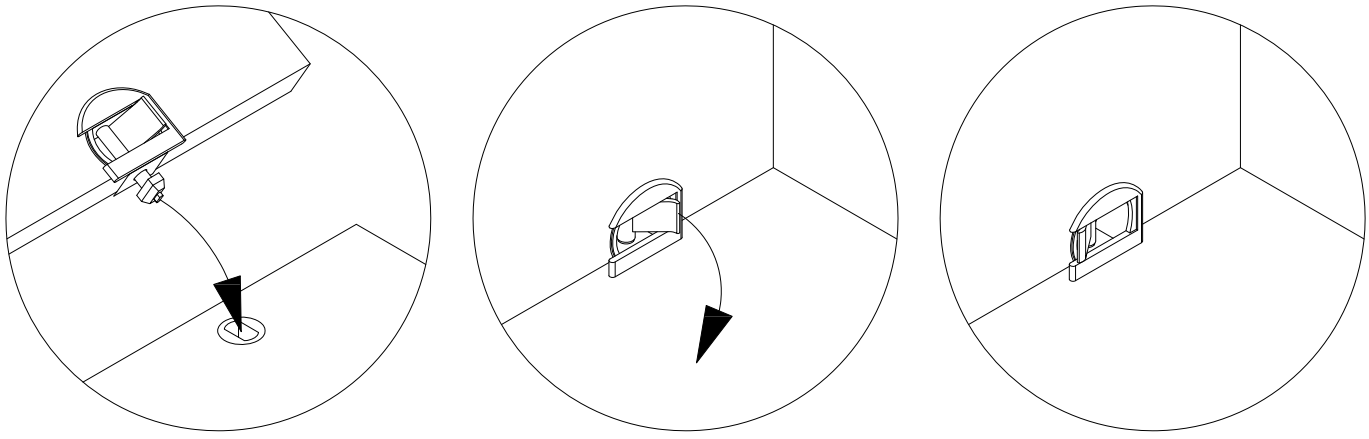

MADE IN CHINA

STEP 1

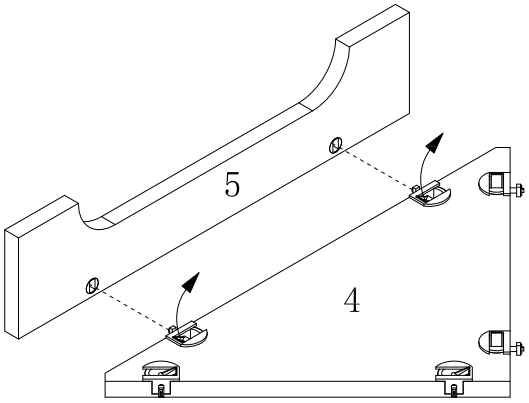

STEP 2

A: 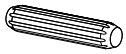 2PCS

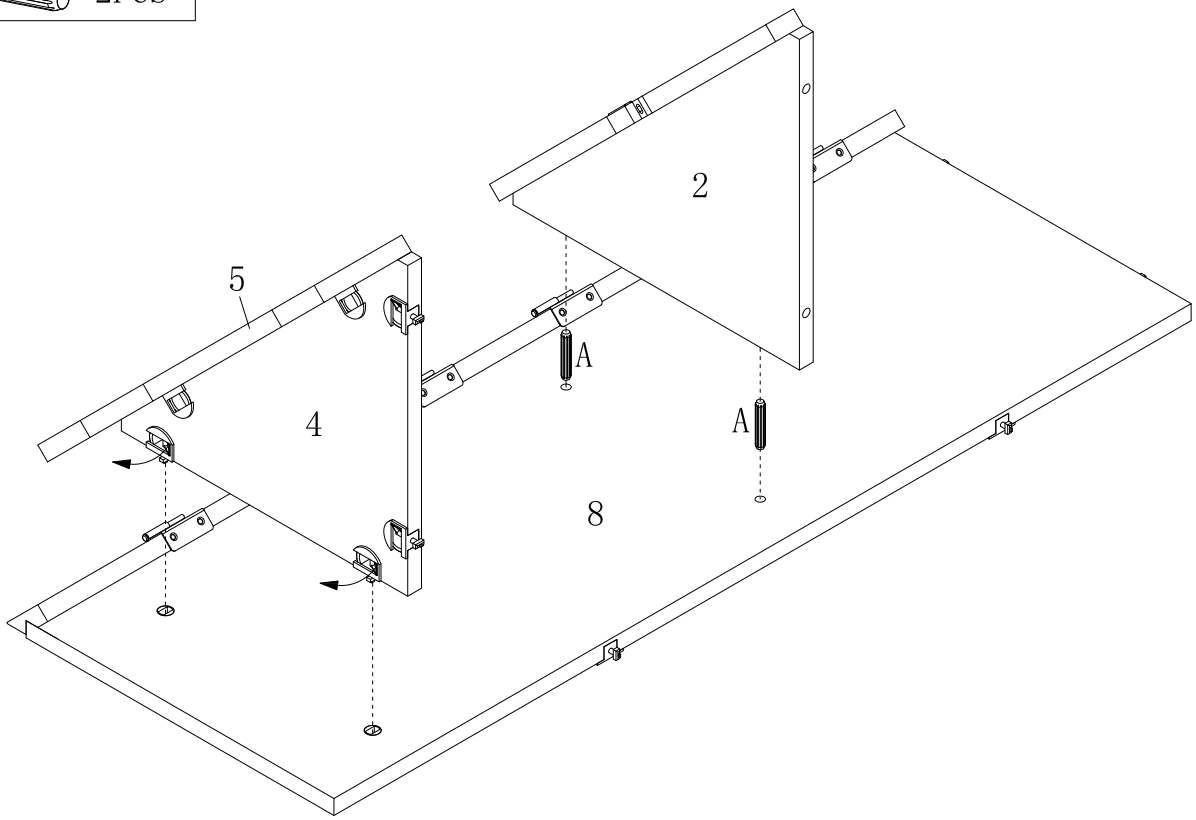

MADE IN CHINA

STEP 3

A: 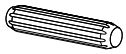 2PCS

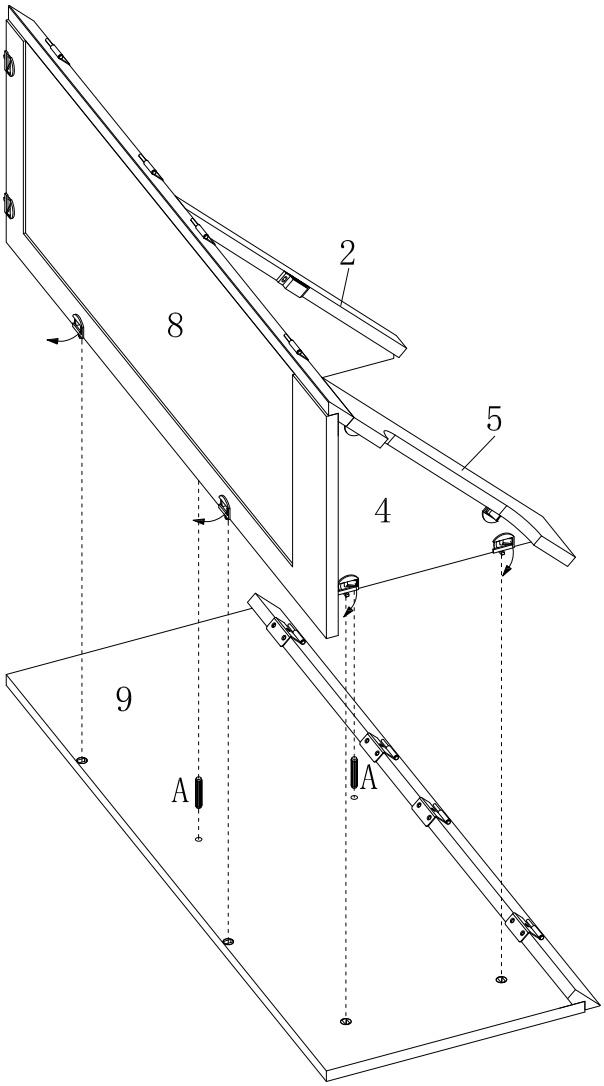

STEP 4

A: 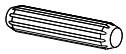 2PCS

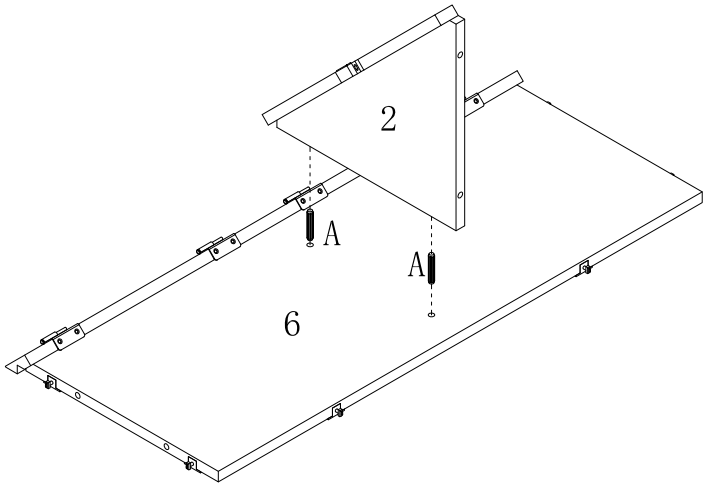

STEP 5

A: 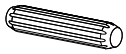 2PCS

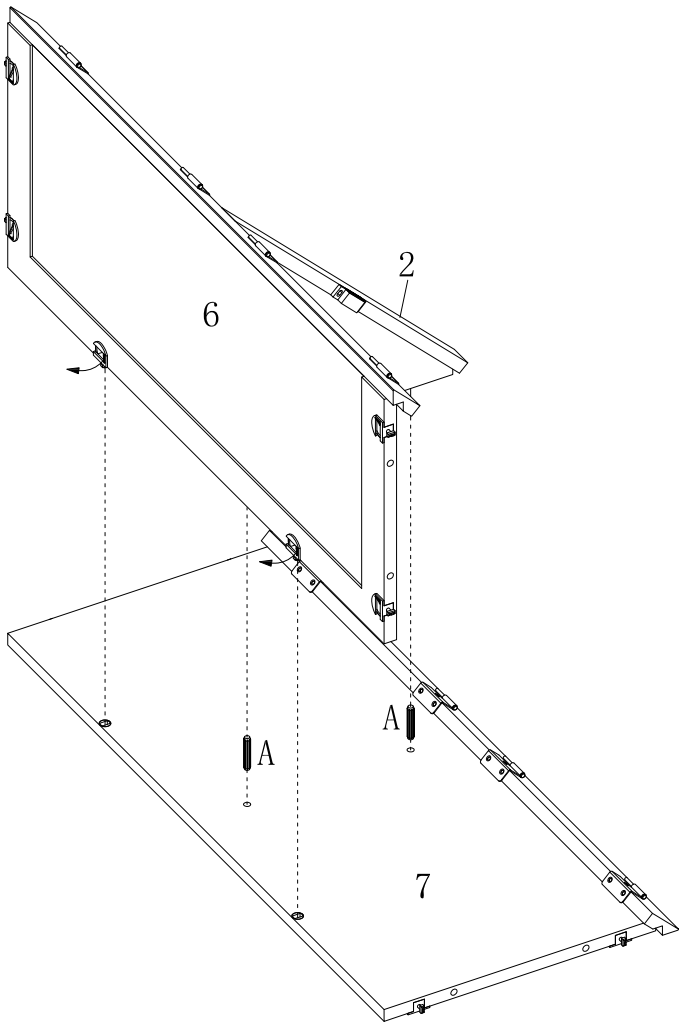

STEP 6

B:  4PCS

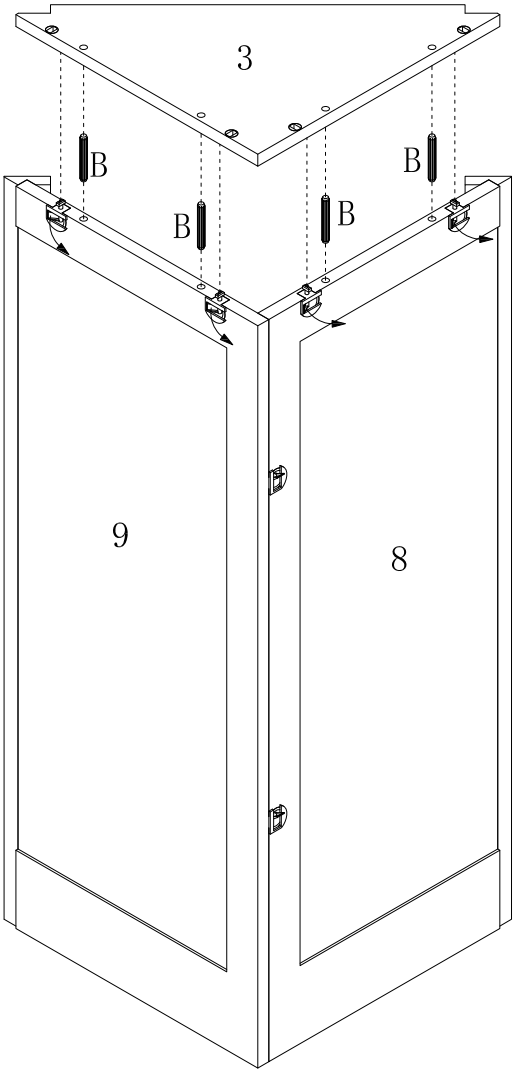

STEP 7

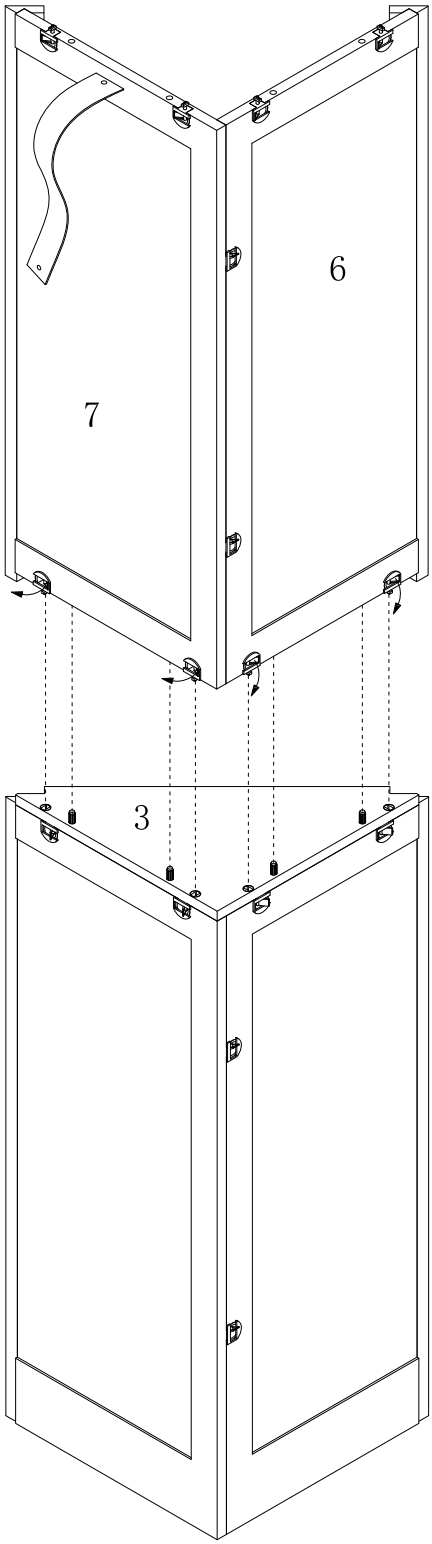

STEP 8

A: 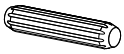 4PCS

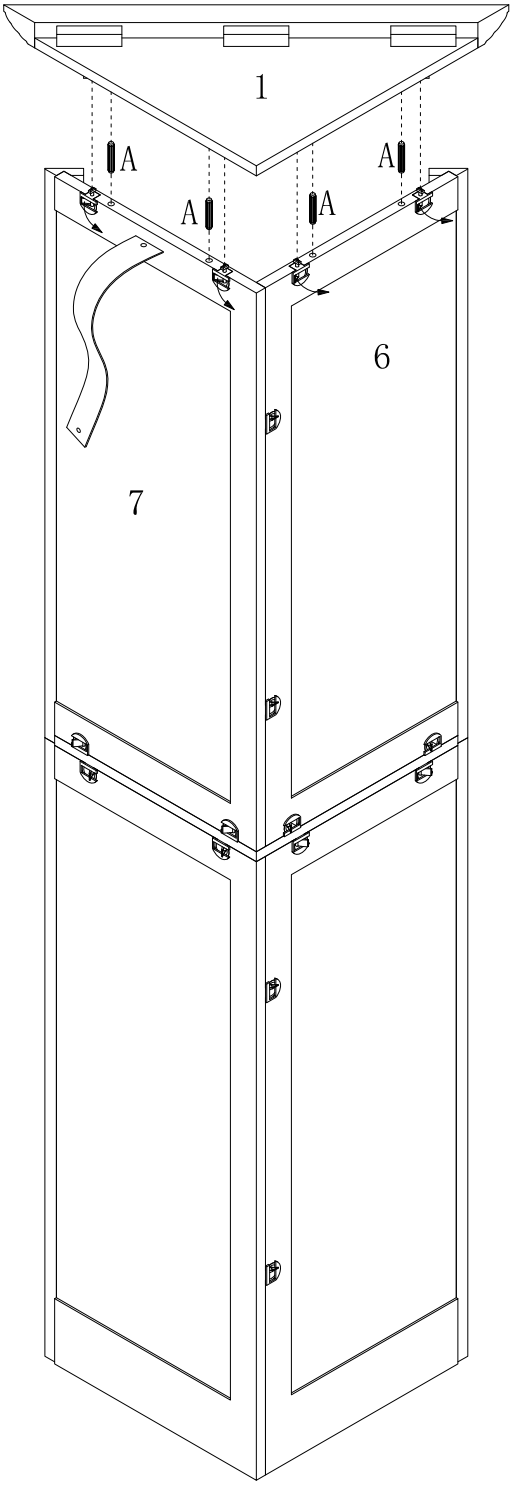

MADE IN CHINA

STEP 9

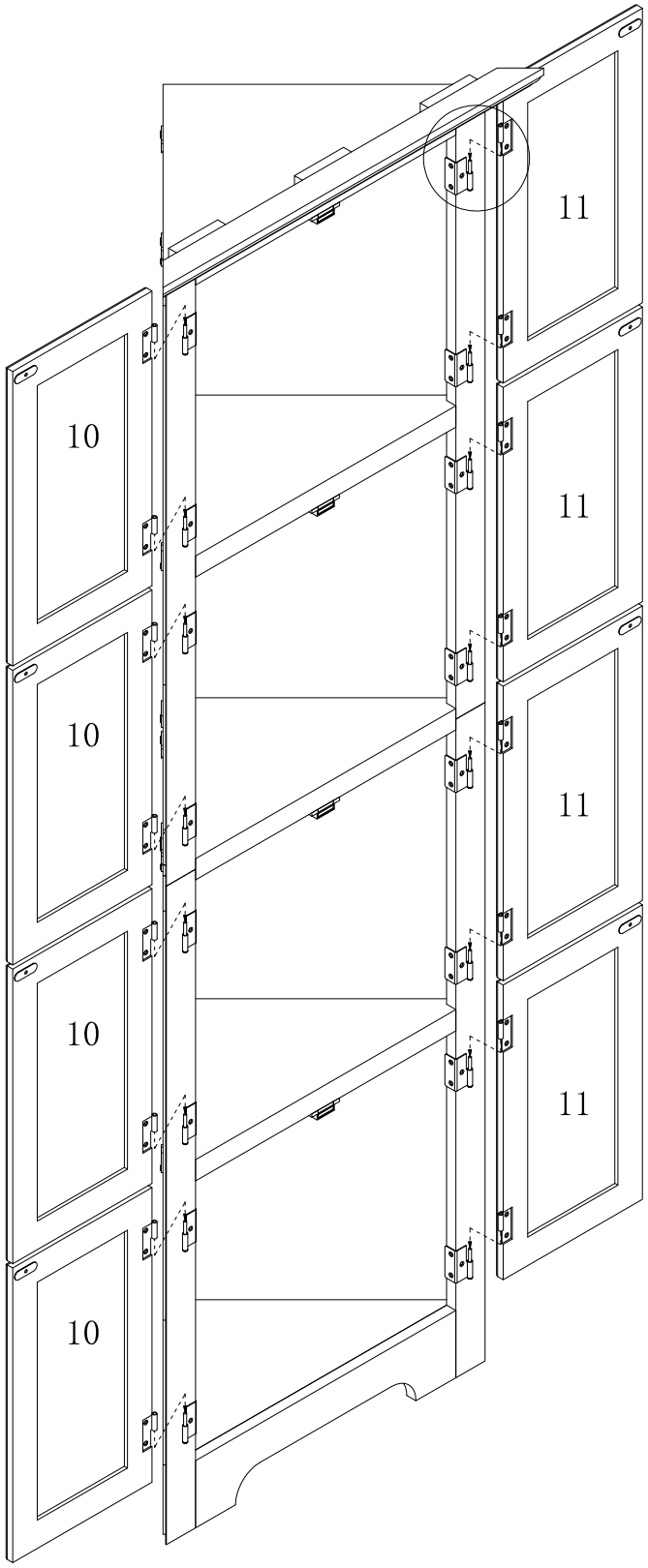

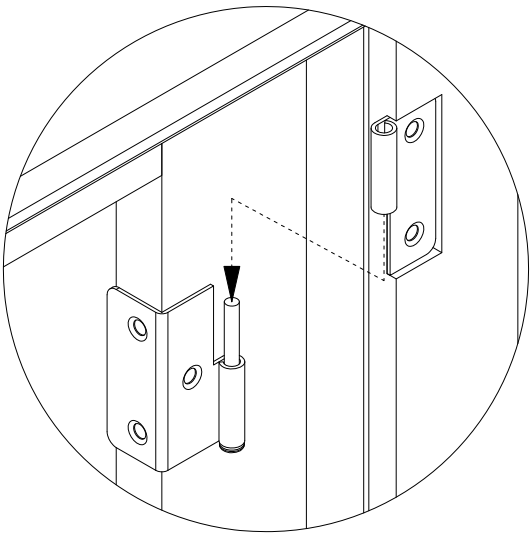

STEP 10

C:		1PC
D:		1PC
E:		1PC
F:		8PCS

