Baby Crib

Harppa

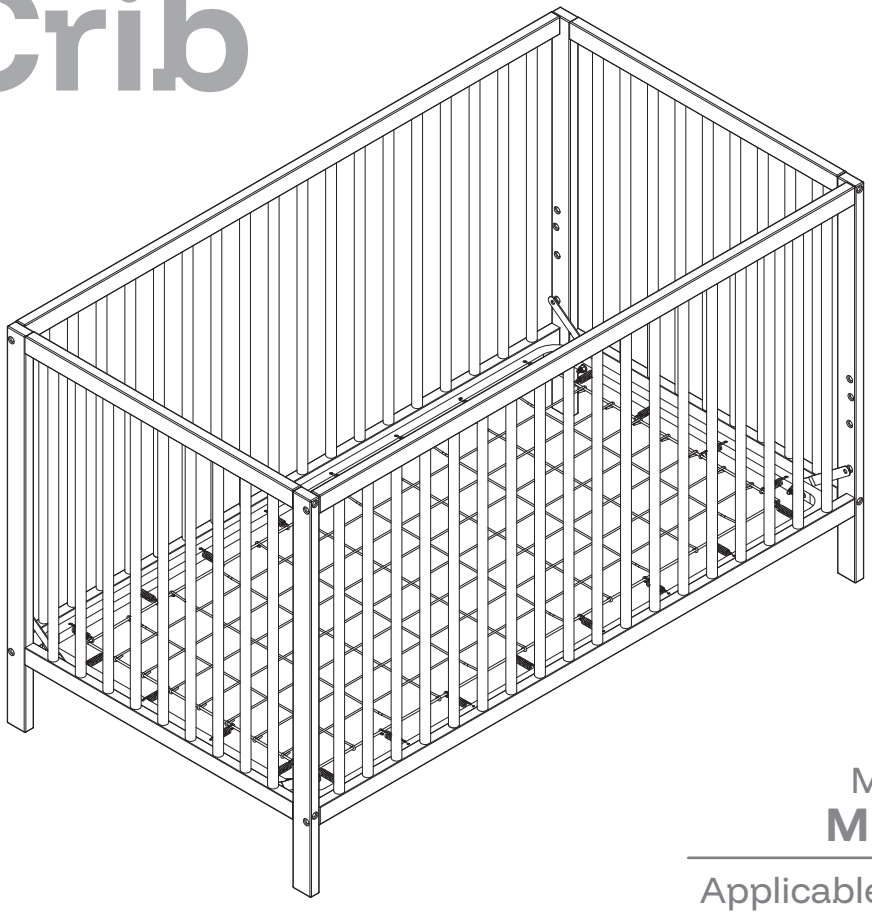

Model
MD01

Applicable age
0-36 months

Standard Load-Bearing Capacity
50 Pounds

Scan to Watch Installation Video

CAUTION: Read all the instructions thoroughly before assembling and using. If some components are missing or damaged, do not use this product. Before and after assembling, check the product to ensure that there are no damaged, missing or loose components and sharp edges.

Harppa's Little Care Crew
care@harppababy.com

Attention

Attention Customers living in the United States and Canada
If you are missing parts, hardware, or if your product has been damaged during shipping

Do Not Return Your Product

The store does not stock parts and may not be able to help you. Please contact us directly and **we will ship you the parts** you need to your shipping address **at no cost to you**. For the quickest and most efficient service, please reach out to us at **care@harppababy.com** including your order number. We're here to help!

※ **Stay Scratch-Free: Safeguard Your Product by Assembling on Carpet.**

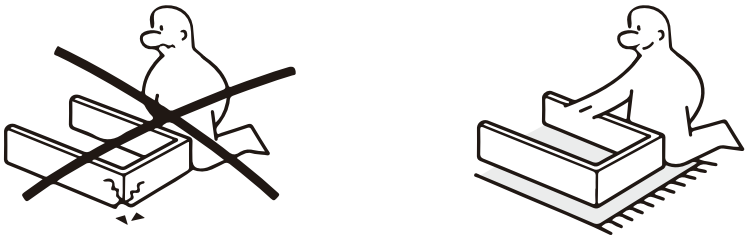

※ **Stuck in Assembly Limbo? Check out our website or contact our support team for quick solutions!**

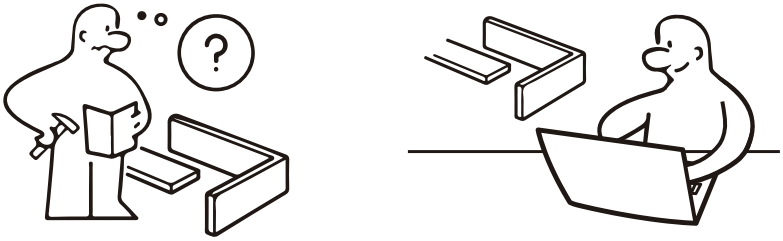

WARNING AND SAFETY TIPS

care@harppababy.com

⚠ WARNING

FAILURE TO FOLLOW THESE WARNINGS AND THE INSTRUCTIONS COULD RESULT IN SERIOUS INJURY OR DEATH.

- Read all instructions before assembling the crib. KEEP INSTRUCTIONS FOR FUTURE USE.
- Infants can suffocate on soft bedding, Never add a pillow or comforter. Never place additional padding under an infant.
- The mattress used in this crib should not be more than 6 inches (15cm) thick and should be of such length and width that the gap between the mattress and the sides of the crib is no more than 13/16 inches (3cm) when the mattress is pushed into the corner of the crib.
- Infants can suffocate in gaps between crib sides and a mattress that is too small.
- Check this product for damaged hardware, loose joints, loose bolts or other fasteners, missing parts or sharp edges before and after assembly and frequently during use. Securely tighten loose bolts and other fasteners. DO NOT use the crib if any parts are missing, damaged or broken. Contact HARPPABABY.COM for replacement parts and instructional literature if needed. DO NOT substitute parts.
- To reduce the risk of SIDS, pediatricians recommend healthy infants be placed on their backs to sleep unless advised otherwise by your physician.

WARNING AND SAFETY TIPS

care@harppababy.com

- **DO NOT** use a water mattress with this crib.
- Never use plastic shipping bags or other plastic film as mattress covers because they can cause suffocation.
- If re-finishing,use non-toxic finish specified for children's products.
- **DO NOT** use this crib if the attached or enclosed instructions cannot be strictly adhered .
- Follow warnings on all products in a crib.

STRANGULATION HAZARD

- Strings can cause strangulation! Do not place items with a string round a child's neck, such as hood strings or packaging cords. Do not suspend strings over a crib or toddler bed for any reason or attach strings to toys.
- To help prevent strangulation tighten all fasteners. A child can trap parts of the body or clothing on loose fasteners.
- **DO NOT** place crib near window where cords from blinds or drapes may strangle a child.

FALL HAZARD

- When child is able to pull to a standing position, set mattress to lowest position and remove bumper pads, large toys and other objects that could serve as steps for climbing out.
- Stop using the crib when the child begins to climb out or reaches the height of 35 inches(89 cm).

WARNING AND SAFETY TIPS

care@harppababy.com

CAUTION: ANY MATTRESS USED IN THIS CRIB SHALL BE AT LEAST 27 1/4 INCHES BY 51 5/8 INCHES (69 CM X 131 CM) WITH A THICKNESS NOT EXCEEDING 6 INCHES (15 CM) AND THE MINIMUM MATTRESS THICKNESS OF 4 INCHES (10 CM).
THIS PRODUCT CONFORMS TO APPLICABLE REGULATIONS PROMULGATED BY THE CONSUMER PRODUCT SAFETY COMMISSION.

Sealious Information

care@harppababy.com

Welcome to HARPPA family! Lets get SEALIOUS!

Customer satisfaction is our No.1 priority.
If for any reason there is anything missing, incorrect, or different from your expectation, please contact us first at **care@harppababy.com.** We will resolve your issue within 24 hours, guaranteed!

IMPORTANT- Keep for reference - Read carefully
Please read this manual before assembling and using this product, it will tell you the correct operation method and assembly procedure, so as to avoid damage to the product or injury to your child due to incorrect operation method.

Dear customer, for a seamless installation experience of our product, we highly recommend referring to our installation video. It will walk you through every step in an easy-to-follow manner. Let's make the setup process a breeze together.

Scan to Watch Installation Video

Sealious Information

care@harppababy.com

Parts List

P1	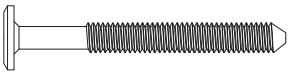	Φ13 x M6 x 55	8pcs
P2	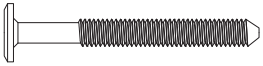	Φ13 x M6 x 35	8pcs
P3		Φ13 x M6 x 18	4pcs
P4		M4 x 106	1pcs

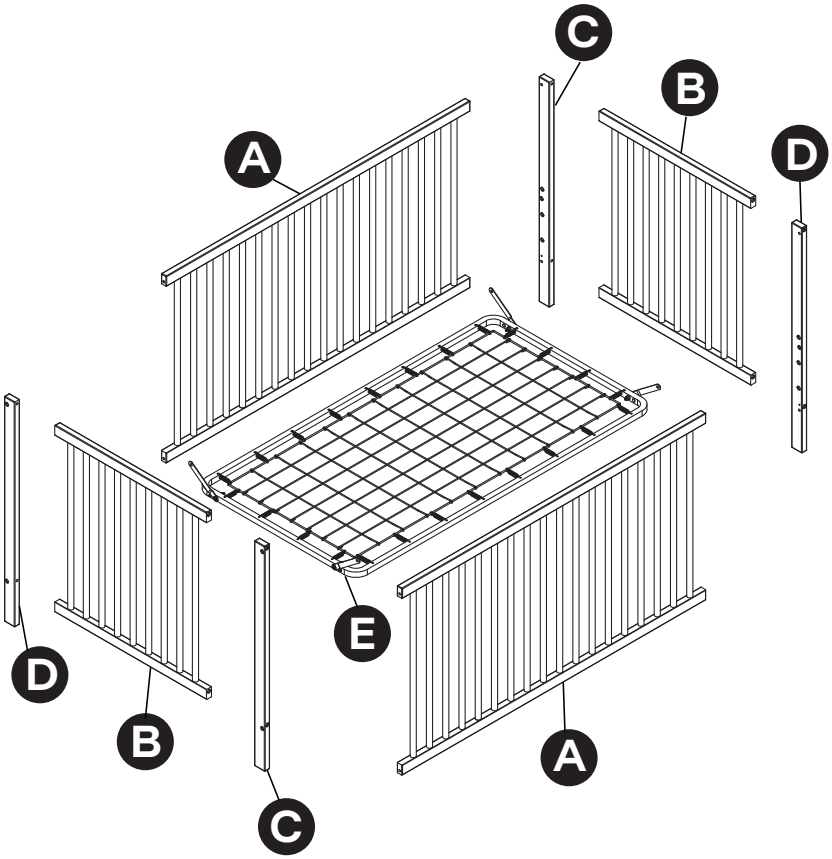

care@harppababy.com

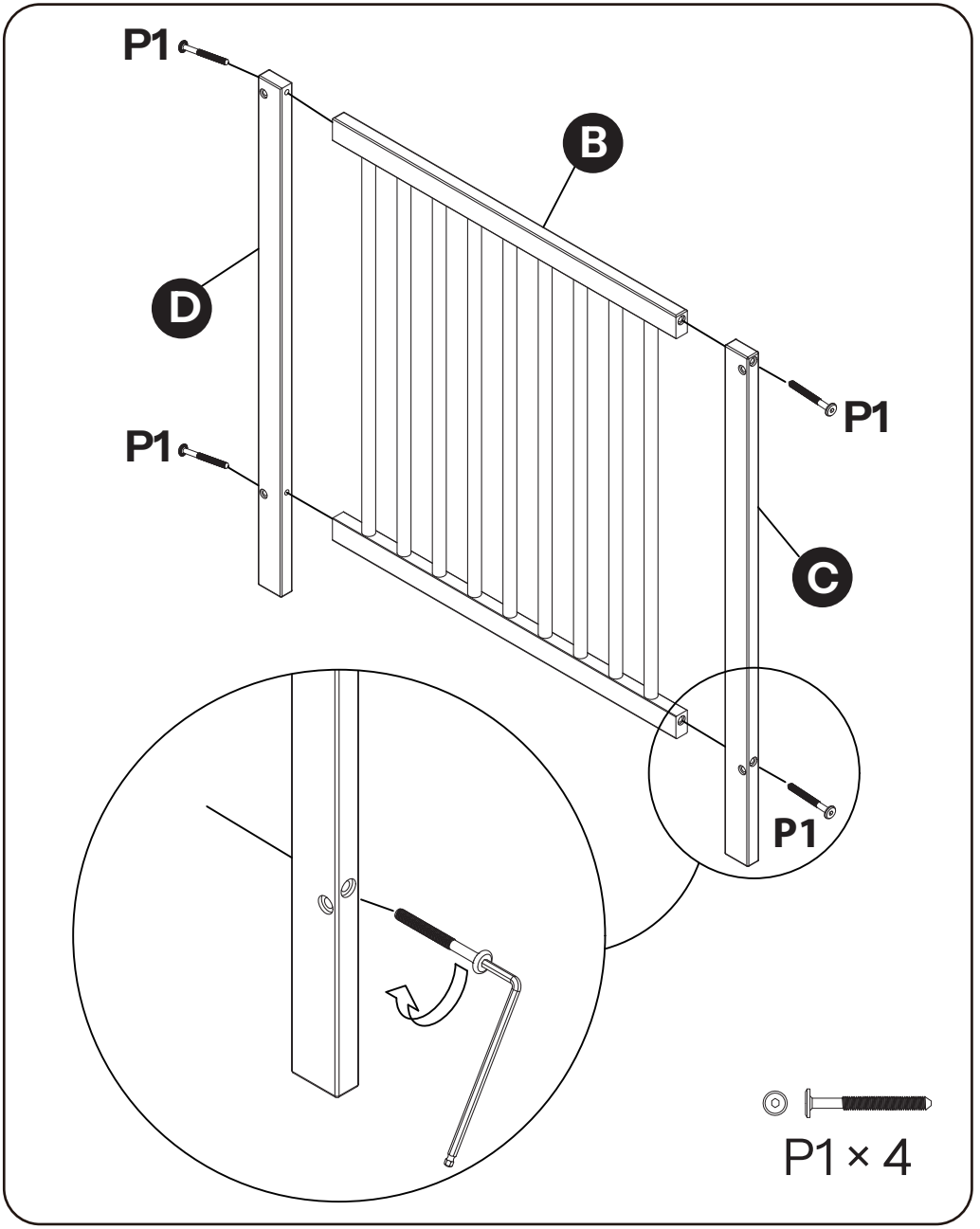

care@harppababy.com

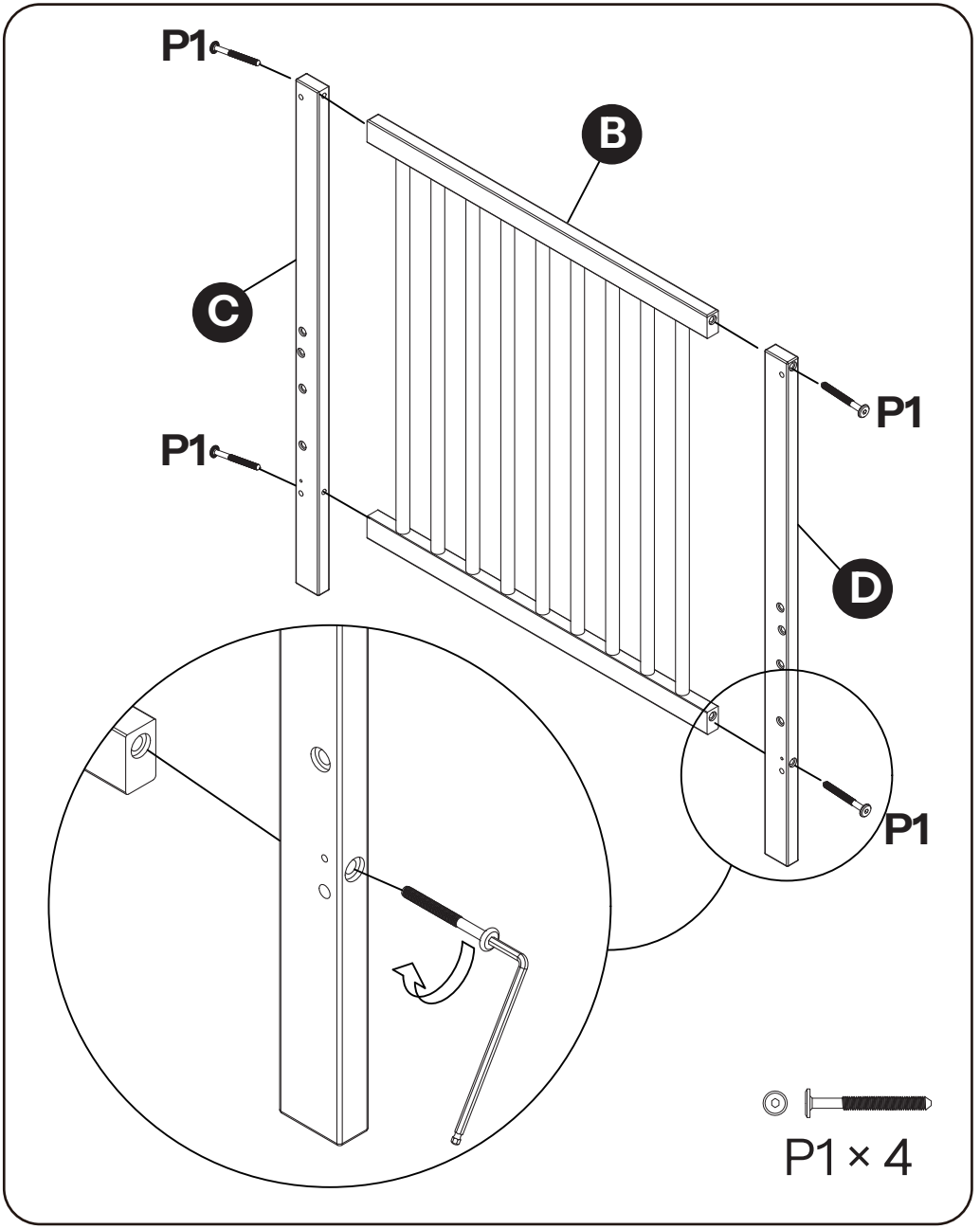

care@harppababy.com

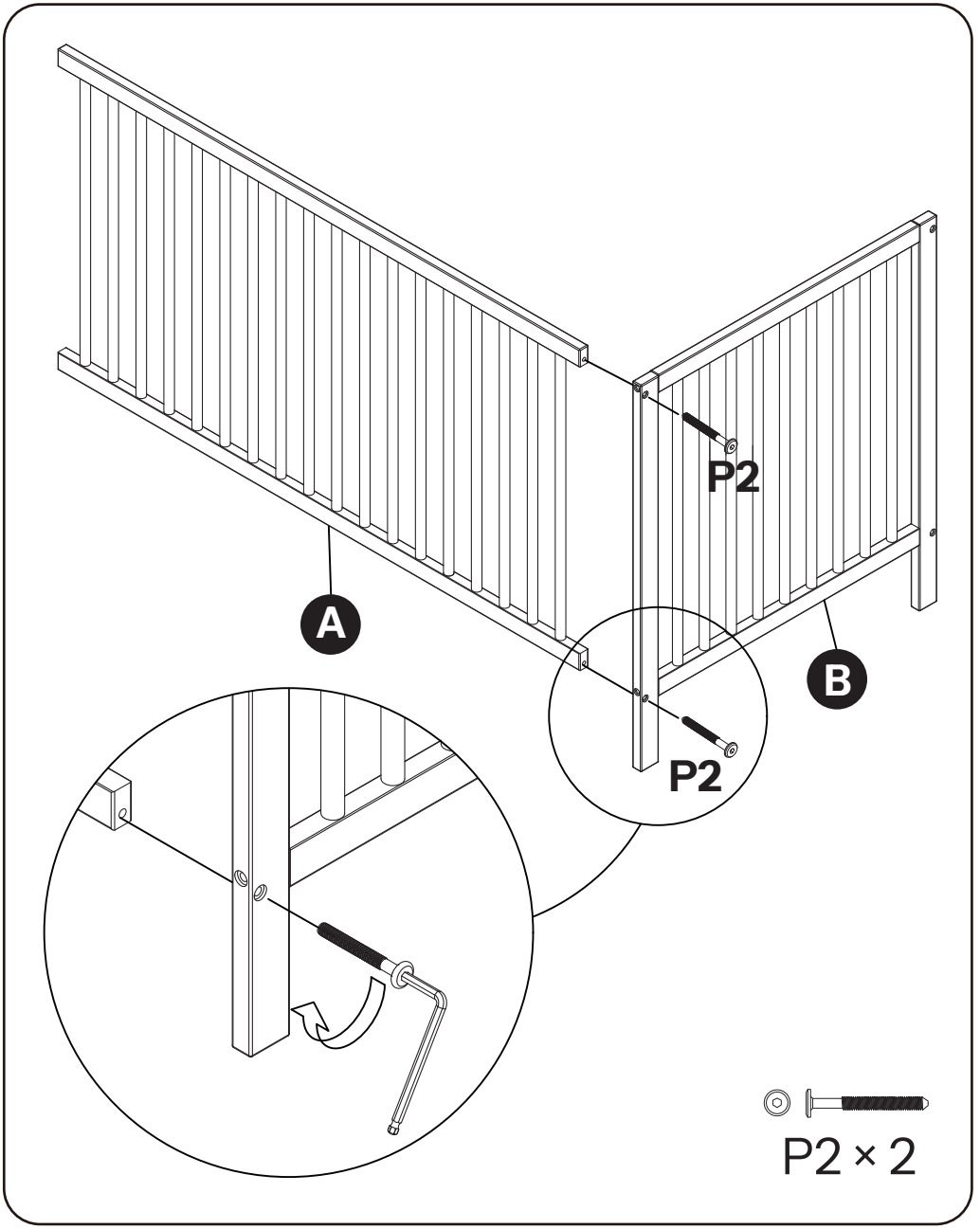

care@harppababy.com

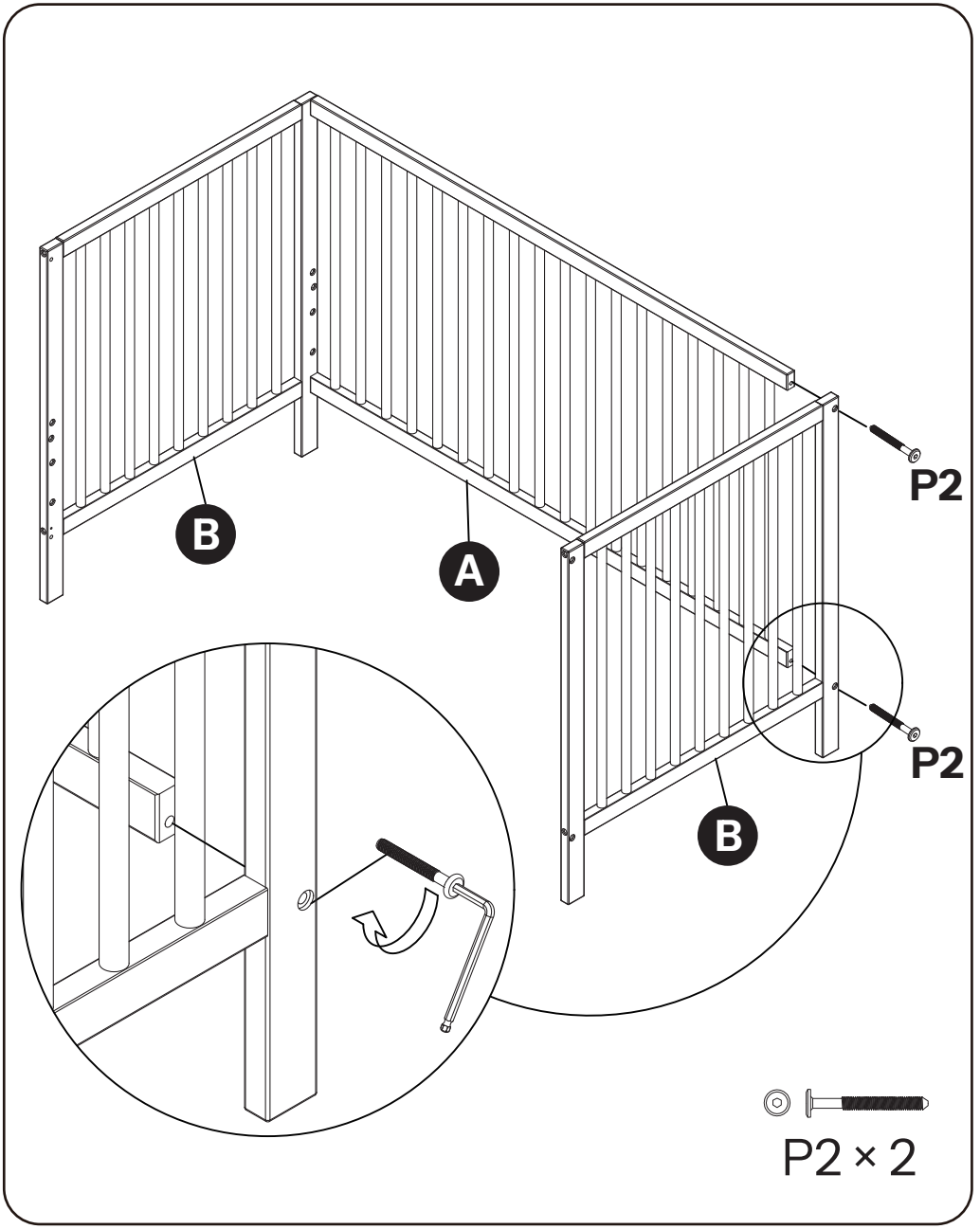

care@harppababy.com

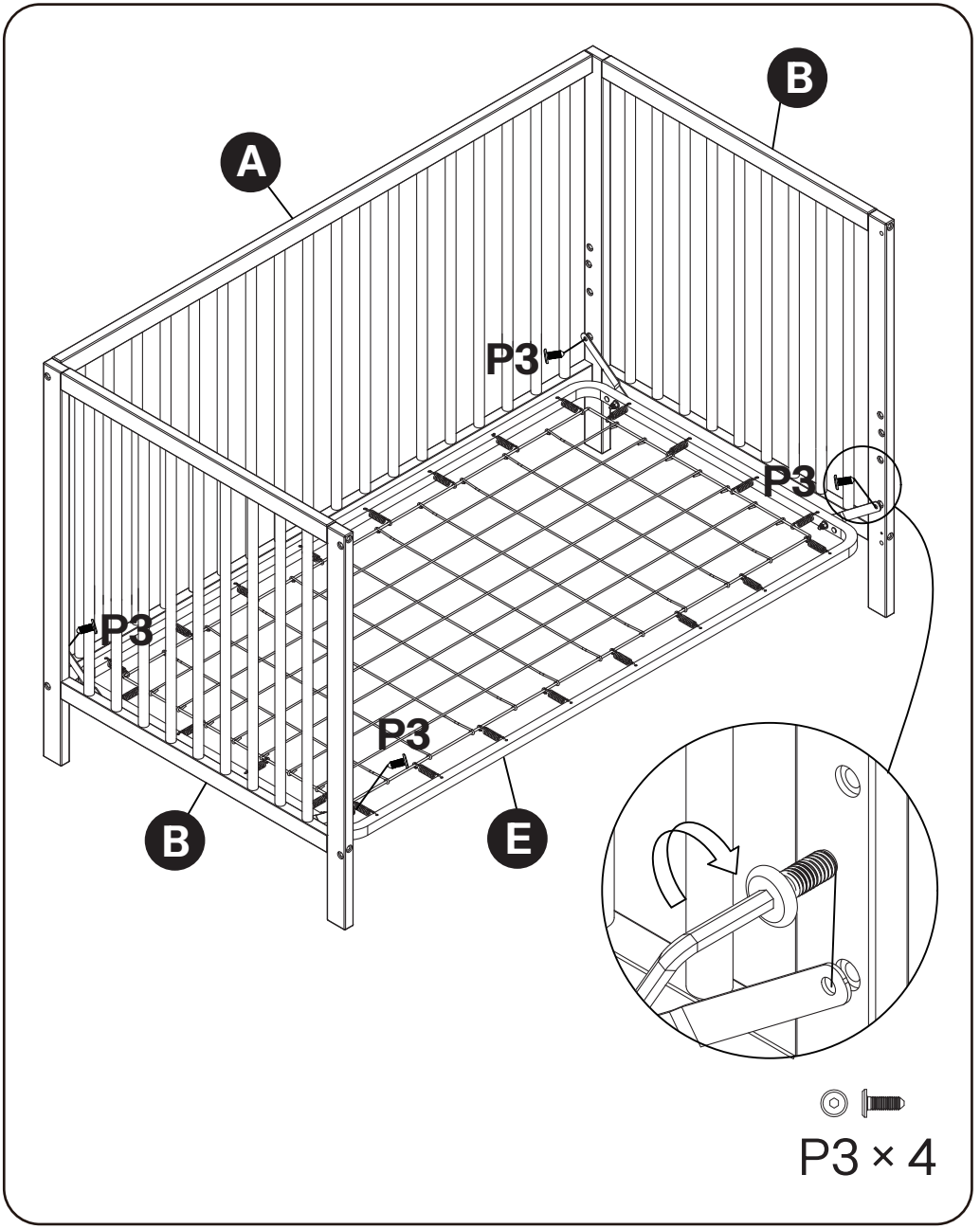

P3 × 4

care@harppababy.com

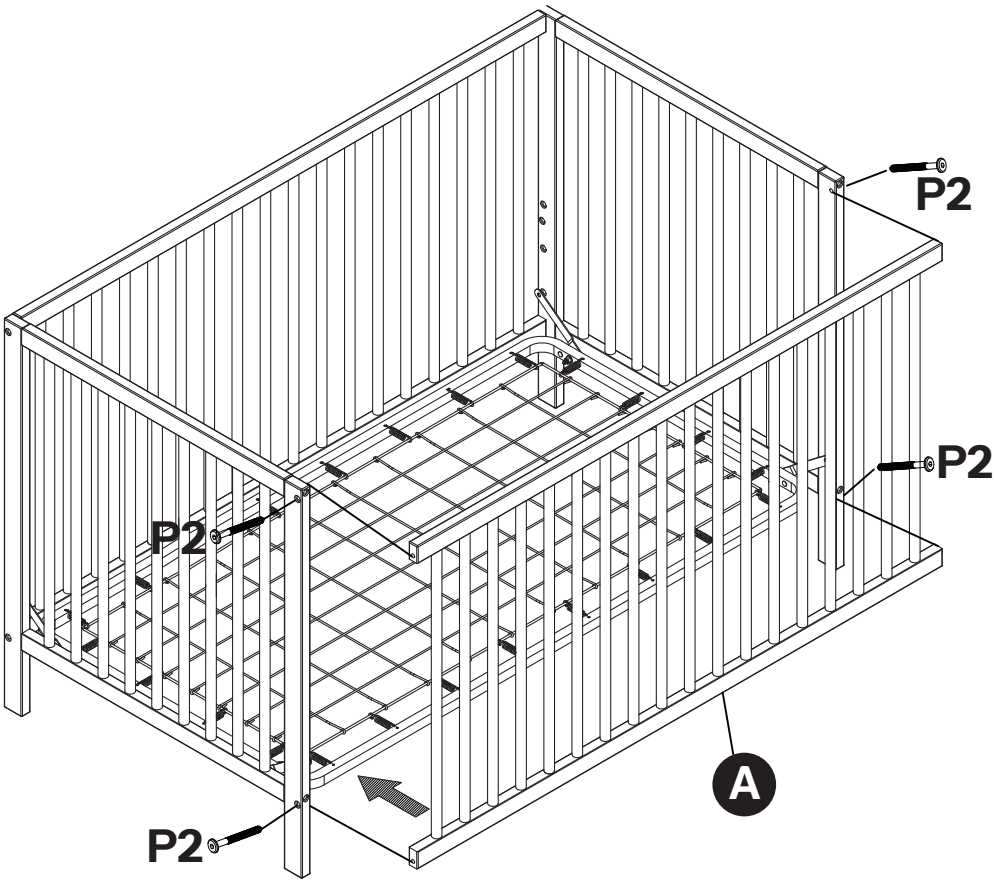



P2 × 4

Storage and Care

Do not remove any part that is fixed with wood screws. The fixed side rail and mattress base can be disassembled for storage. Simply review the assembly instructions for each part and reverse the operation to disassemble. Wipe all parts with a dampened clean cloth. Do not use abrasives. To convert to a toddler bed and a full size bed, please follow the instructions kit.(Accessories need to be purchased separately.)

Environment

For environmental reasons, when you have stopped using this product, we ask that you dispose of the product in the proper waste facilities in accordance with local legislation.

Questions

Please contact our customer service at care@harppababy.com or visit our website. When doing so please have the following information to hand:

- Order number
- Age (height) and weight of your child.

Warranty

Our 12 months warranty reflects our confidence in the high quality of our design, engineering, production and product performance. We confirm that this product was manufactured in accordance with the current American safety requirements and quality standards which are applicable to this product, and that this product is free from defects on materials and workmanship at the time of purchase. Under the conditions mentioned herein, this warranty may be invoked by consumers in the countries where this product has been sold by a subsidiary of HARPPA or by an authorized dealer or retailer.

Our 12 months warranty covers all manufacturing defects in materials and workmanship when used in normal conditions and in accordance with our user manual for a period of 12 months from the date of the original retail purchase by the first end-user customer. To request repairs or spare parts under our warranty for defects in materials and workmanship you must present your proof of purchase, made within the 12 months preceding the service request.

Our 12 months warranty does not apply to defects caused by normal wear and tear, damage caused by accidents, abusive use, negligence, fire, liquid contact or other external cause, damage which is the consequence of failing to comply with the user manual, damage caused by use with another product, damage caused by service by anyone who is not authorized by us, or if the product is stolen or if any label or identification number has been removed from the product or has been changed. Examples of normal wear and tear include wheels and fabric worn down by regular use and the natural breakdown of colors and materials due to normal aging of the product.

Thank You!

For Purchasing from us

care@harppababy.com

Despite our reinforced packaging, transit mishandling can sometimes occur. In the rare event that your product arrives damaged, we're here to assist you.**If your product is in perfect condition, you can disregard this message.**

If you discover any damage upon receipt of your package, please contact our after-sales mailbox immediately at **care@harppababy.com.**

Additionally, we kindly request your assistance in filing a claim against he shipping carrier for the mishandling of your package. Please help us by providing clear photos as follows:

- ★ Complete Shipping Label (Express Delivery Waybill): Take a clear image of the entire shipping label affixed to the package with visible and legible text and barcodes
- ★ Exterior Packaging Damage: Capture a comprehensive photo showing the damaged exterior of the shipping package.
- ★ Interior Item Damage: Provide images focusing on the damaged areas of product

Your cooperation is invaluable, and we assure you that we're committed to resolving this issue promptly. Your satisfaction remains our top priority.

Thank you for your understanding and assistance.

Best regards,
Harppa's Little Care Crew

care@harppababy.com

TEL: +1(888)636-9880

Scan to Customer Service Email

Join the HARPPA Family



www.harppababy.com

Harppa

MADE IN CHINA

HARPPA INC
1500 N GRANT ST, STE R,
DENVER, CO 80203

care@harppababy.com

TEL: +1(888)636-9880

The company website, email address and telephone number provided in this manual are for the convenience of handling customer after-sales inquiries and support.