Assembly Instruction for

Morgan - Console Table

Hardware List				
A		WASHER	Ø1/4" X Ø3/4"	8
B	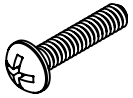	PAN HEAD PHILLIPS SCREW	1/4" X 1"	8

1

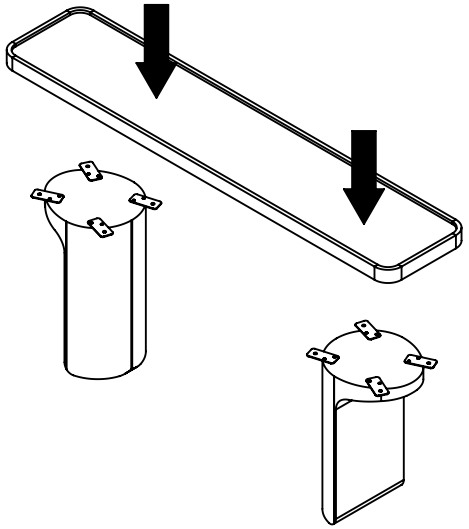

2

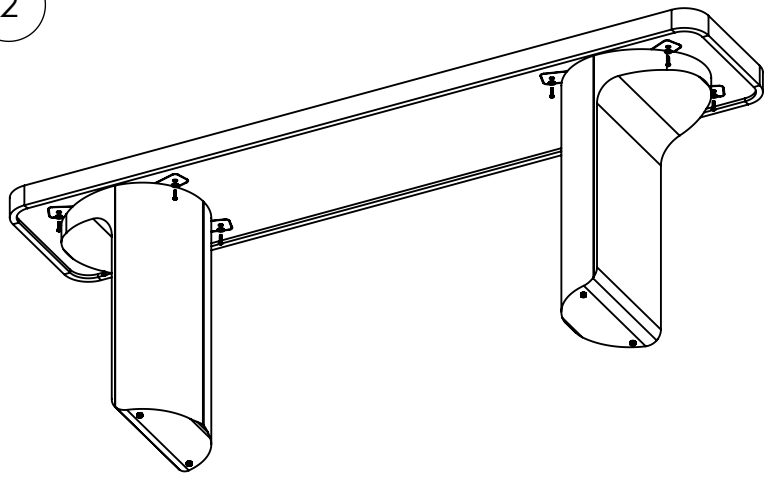

3

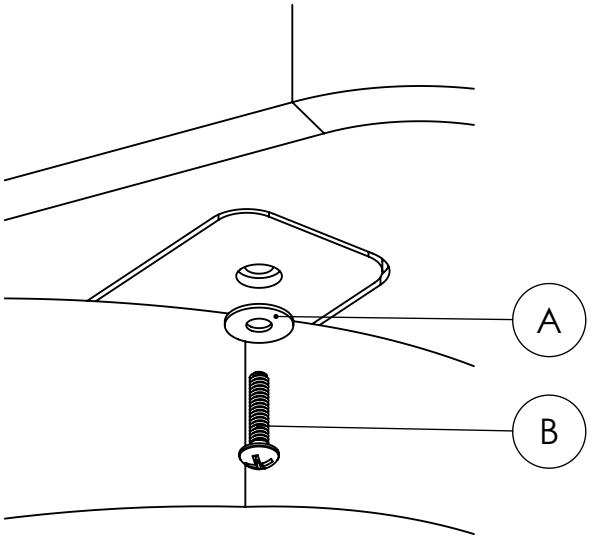

4

