ASSEMBLY INSTRUCTIONS

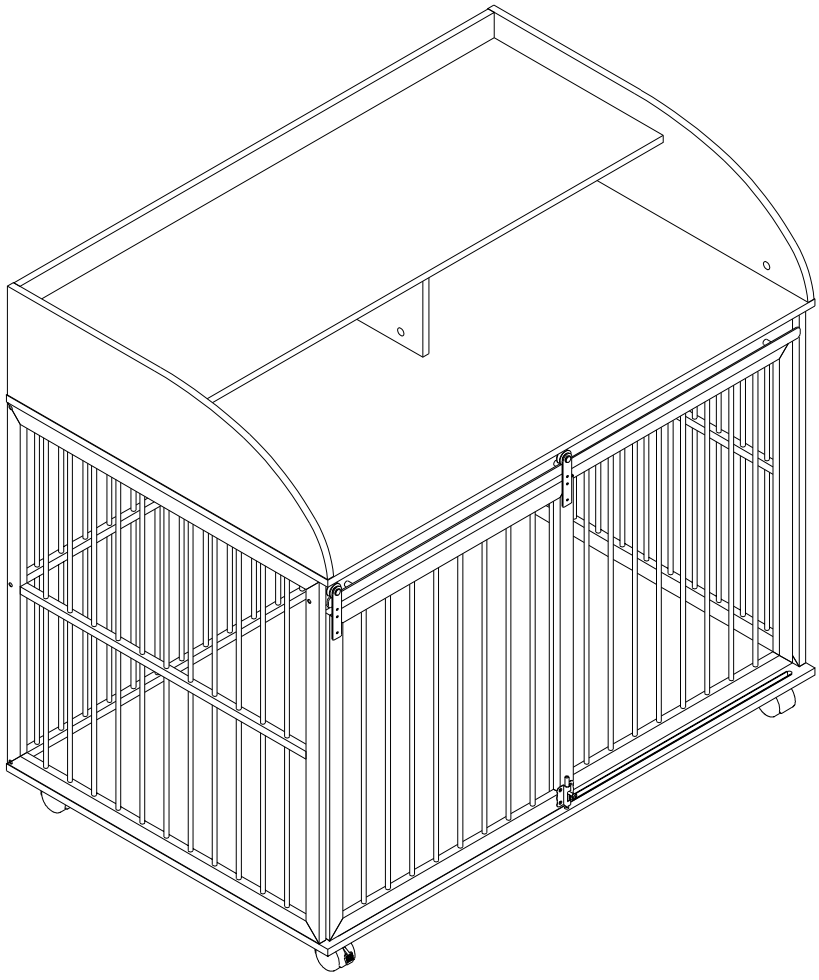

NOTE: 50% TIGHTEN BEFORE FIXING ALL BOLTS

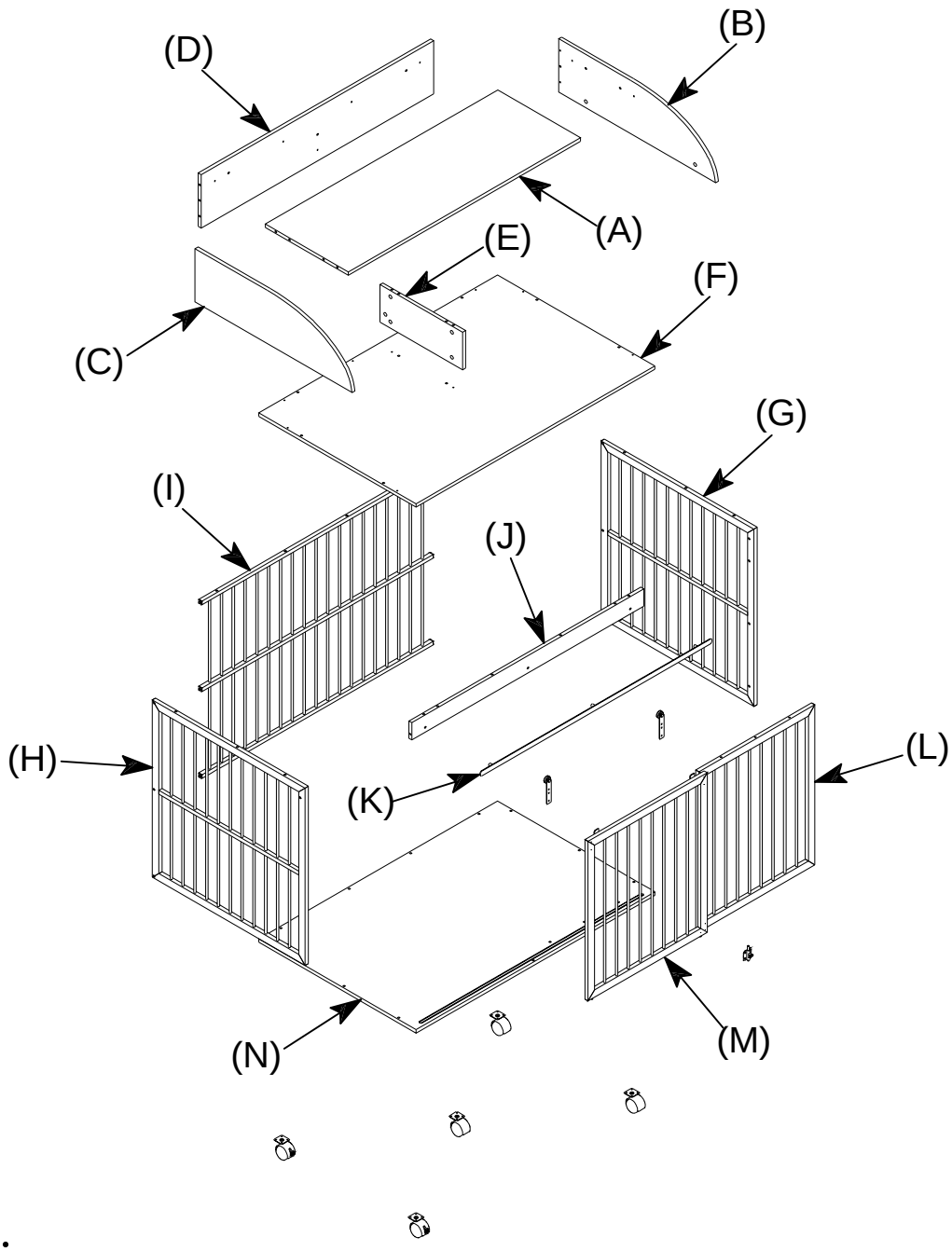

Notice:

1. 50% Tighten before fixing all screws, Allen wrench is recommended instead of an electric drill.
2. Place the item on a flat ground to adjust and make sure it remains stable.
3. Tighten up all screws with tools gradually.
4. If the screws are not aligned with holes during assembly, please loosen all the other screws to 50% and continue the assembly process.
5. If the item is not stable, please loosen all the screws, adjust it on a flat ground and tighten up all screws again.
6. Note : If one or some screws are fully tightened during assembly, chances are the others will not be aligned with holes. In addition, all the holes are designed to be relatively larger to provide more space for the adjustment of the screws.

PART LIST

A 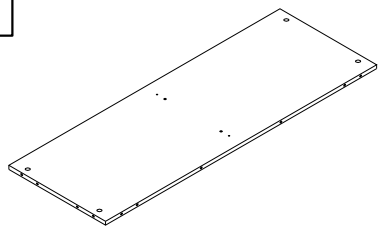 Top Shelf Panel (1PC)	B 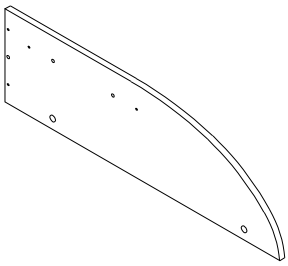 Right Panel (1PC)	C 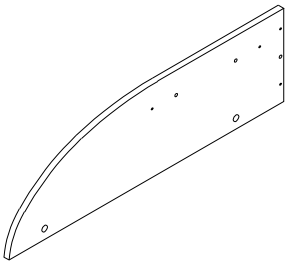 Left Panel (1PC)
D 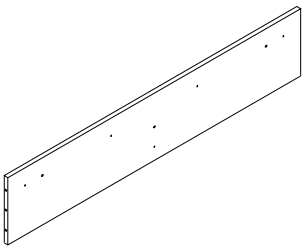 **Back Panel (1PC)**	E 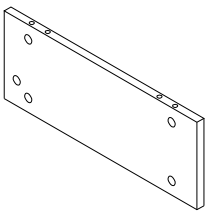 Center Panel (1PC)	F 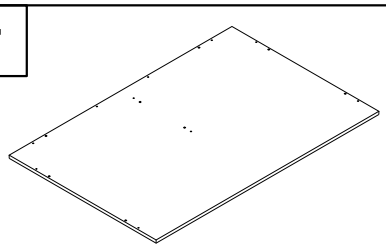 Top Panel (1PC)
G 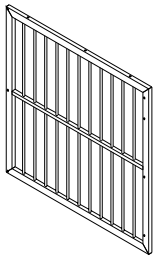 Right **Frame (1PC)**	H 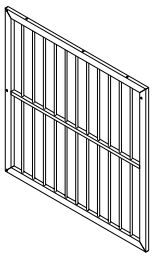 Left **Frame (1PC)**	I 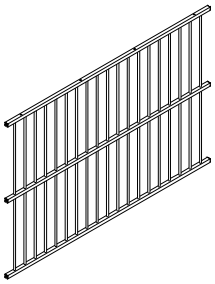 **Back Frame (1PC)**
J 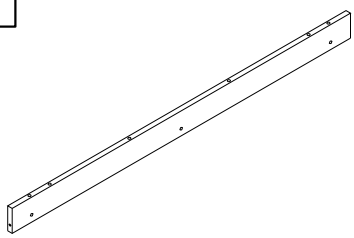 **Front Rail (1PC)**	K 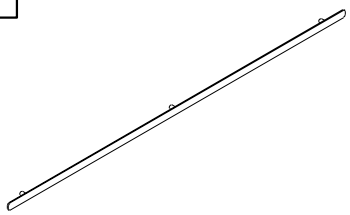 **Front upper stretcher (1PC)**	L 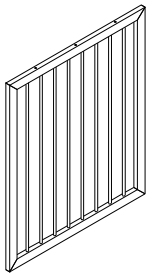 **Front** Right **Frame (1PC)**
M 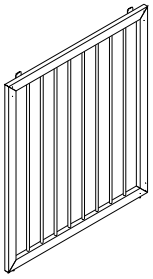 **Door Frame (1PC)**	N 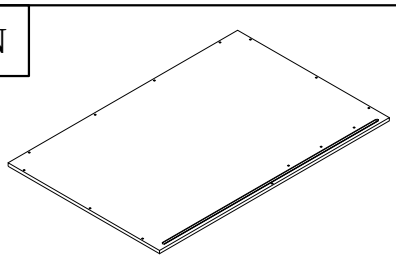 Bottom Panel (1PC)	

HARDWARE LIST

1  Big Cam Lock (32PCS) Extra (2pcs)	2  Cam Bolt (3PCS)	3 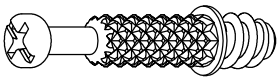 Cam Bolt (29PCS) Extra (2pcs)
4 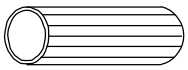 Ø8x30mm Wood Dowel (21PCS) Extra (2pcs)	5 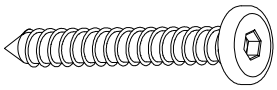 Ø1/4*45mm Bolt Screw (2PCS)	6 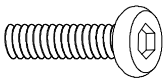 Bolt 1/4" x 25mm (29PCS)
7 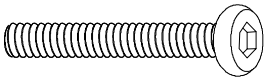 Bolt 1/4" x 38mm (6PCS)	8 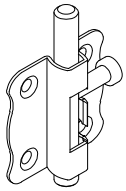 Lock The Door (1PC)	9 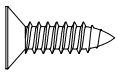 M3*12mm Flat Head Screw (3PCS)
10 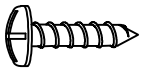 M3.5*12mmWood Screw (4PCS)	11 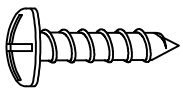 M4*15mmWood Screw (20PCS) Extra 2pcs	12 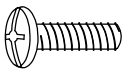 M4x15mm Bolt with Screw Head (2PCS)
13 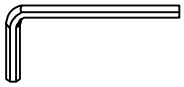 Allen Key 4mm (1PC)	14 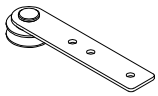 Bamn door roller (2PCS)	15 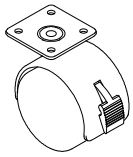 Locking Caster (2PCS)

HARDWARE LIST

16	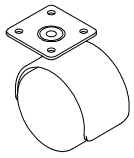 Swivel Caster (3PCS)	

CARTON CONTENT:

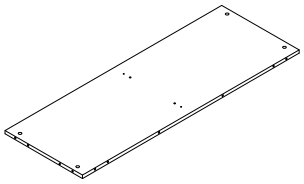

A Top Shelf Panel (1PC)

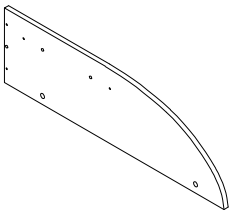

B Right Panel (1PC)

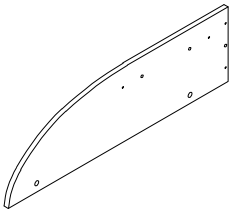

C Left Panel (1PC)

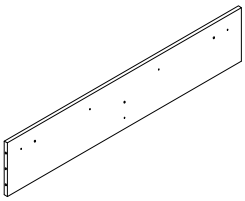

D **Back Panel (1PC)**

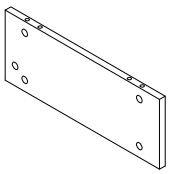

E Center Panel (1PC)

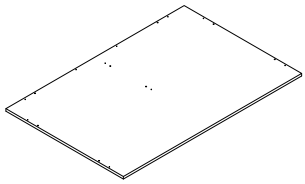

F Top Panel (1PC)

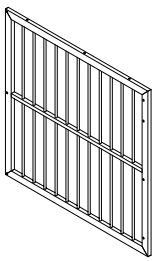

G Right **Frame (1PC)**

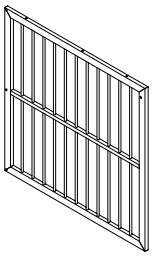

H Left **Frame (1PC)**

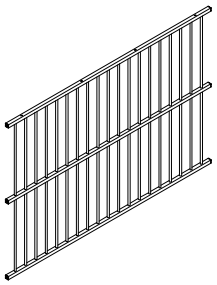

I **Back Frame (1PC)**

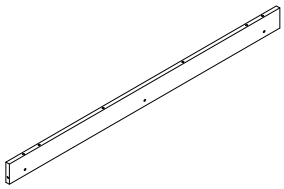

J **Front Rail (1PC)**

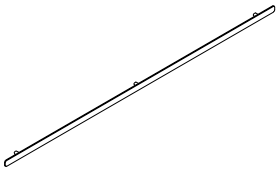

K **Front upper stretcher (1PC)**

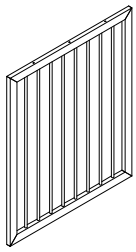

L **Front** Right **Frame (1PC)**

CARTON CONTENT:



M **Door Frame (1PC)**

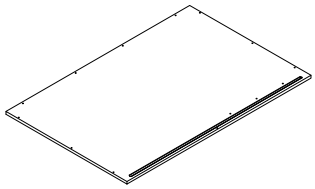

N Bottom Panel (1PC)

STEP 1

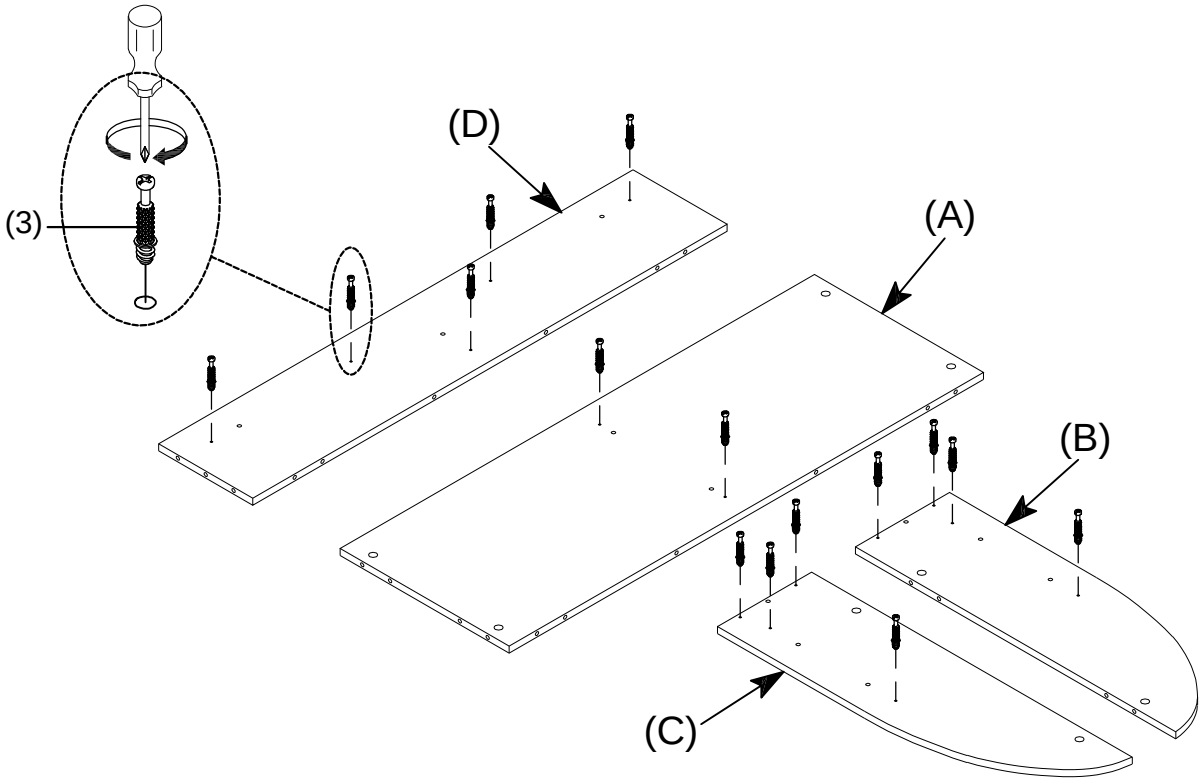

3	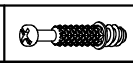	Cam Bolt	15 pcs

STEP 2

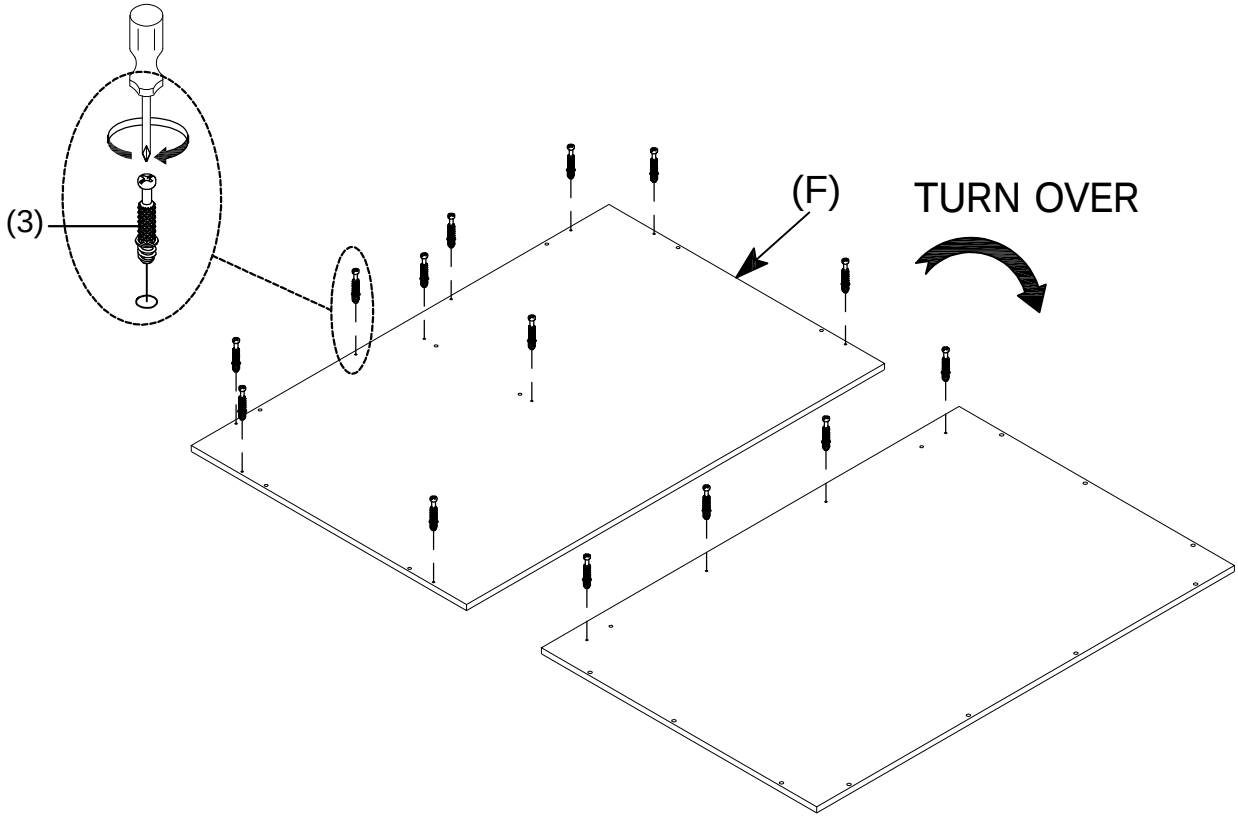

3	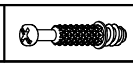	Cam Bolt	14 pcs

STEP 3

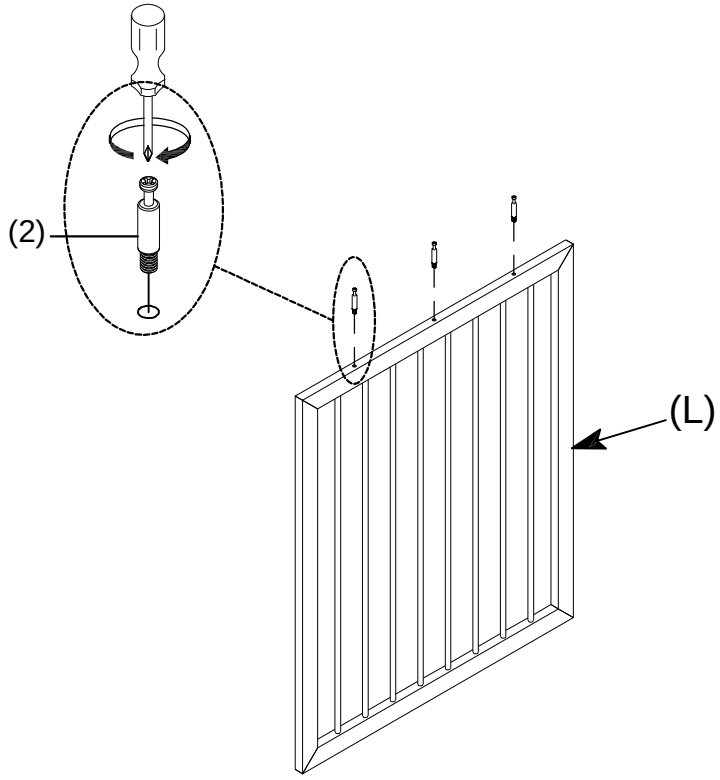

2	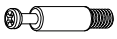	Cam Bolt	3 pcs

STEP 4

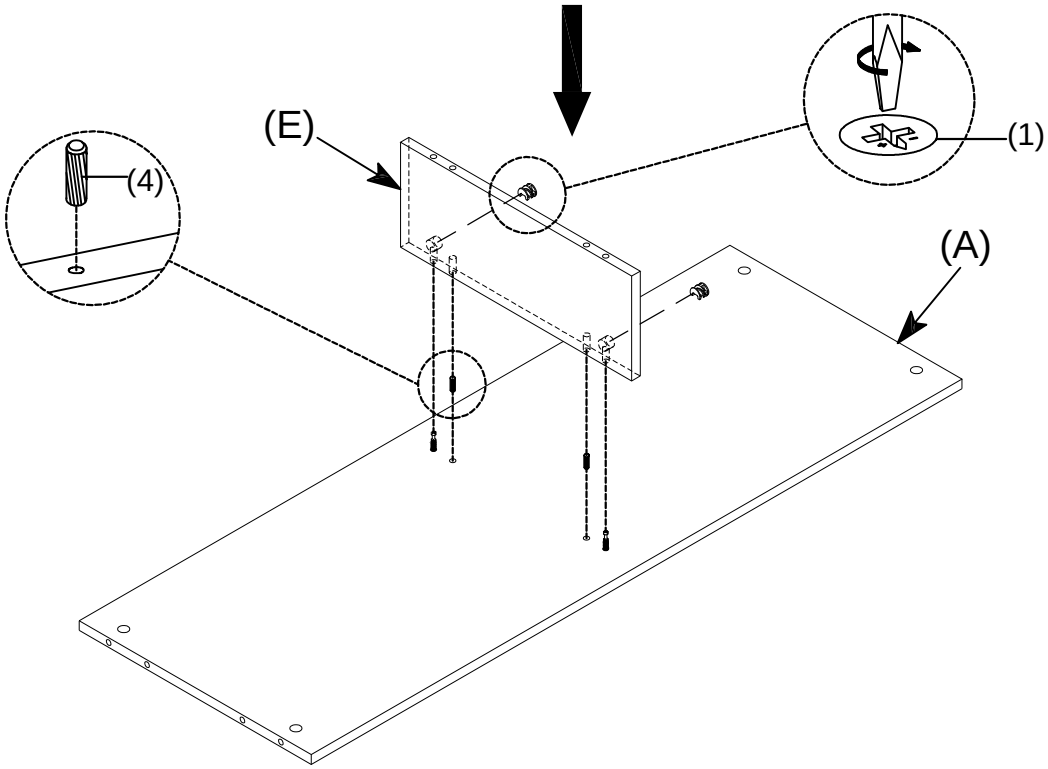

1		Cam Lock	2 pcs	4		Ø8x30mm Wood Dowel	2 pcs

STEP 5

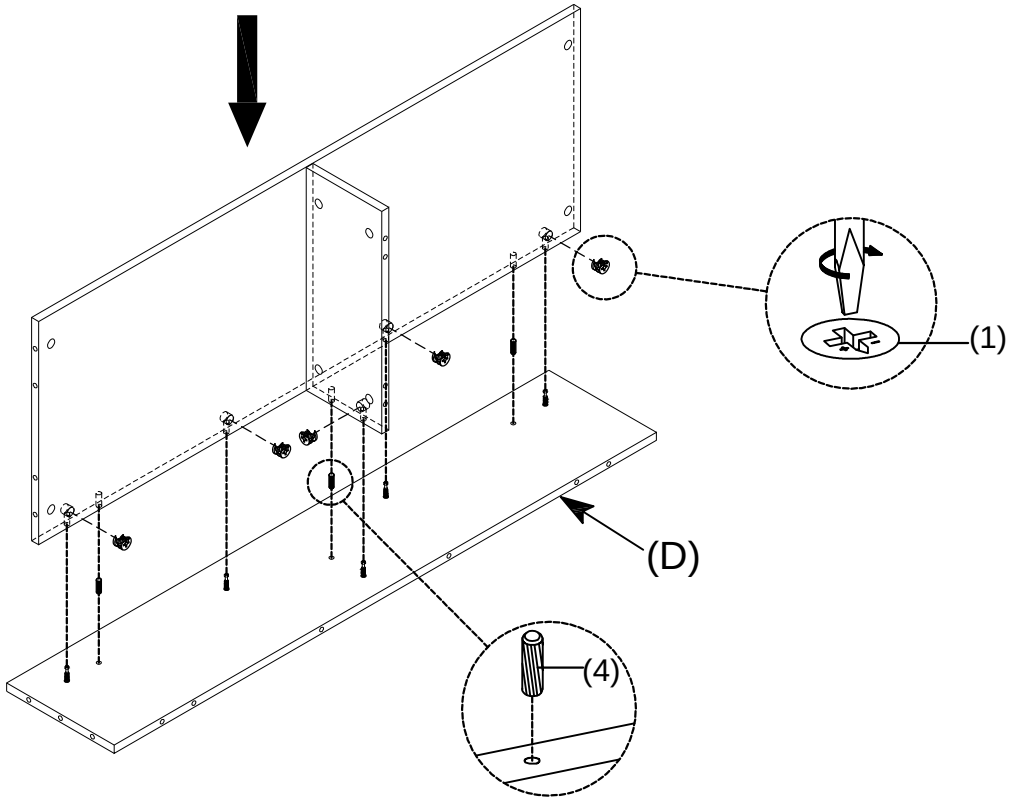

1		Cam Lock	5 pcs	4		Ø8x30mm Wood Dowel	3 pcs

STEP 6

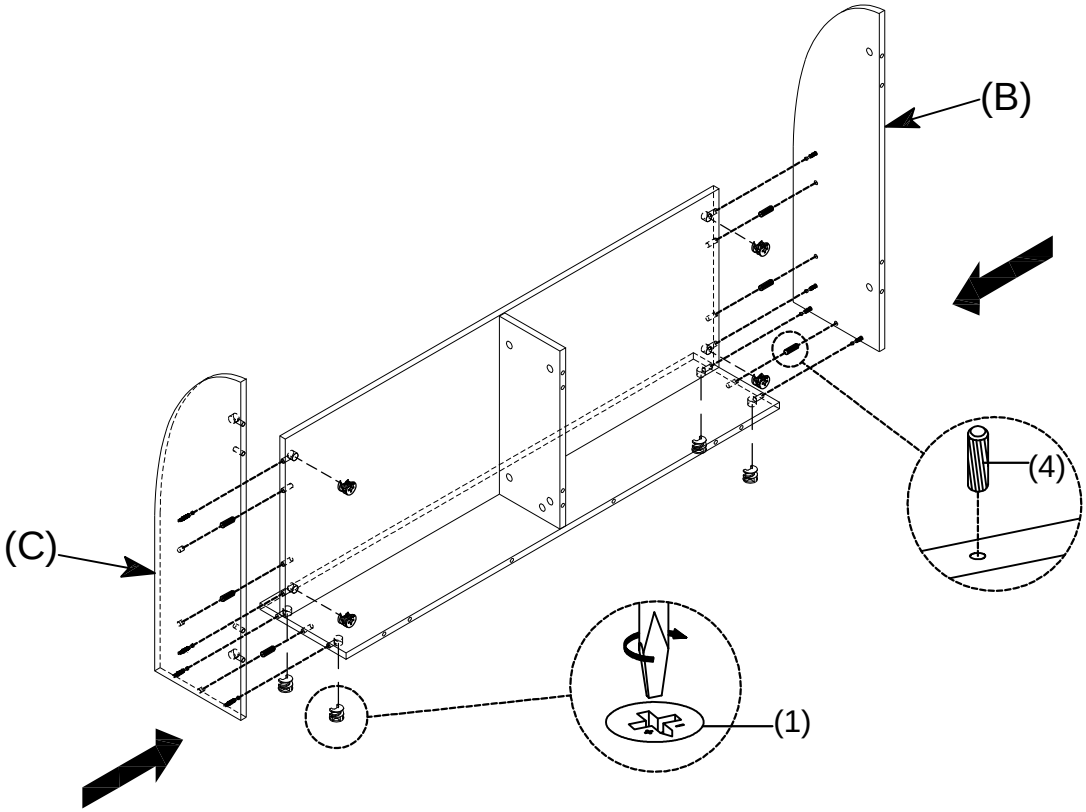

1		Cam Lock	8 pcs	4		Ø8x30mm Wood Dowel	6 pcs

STEP 7

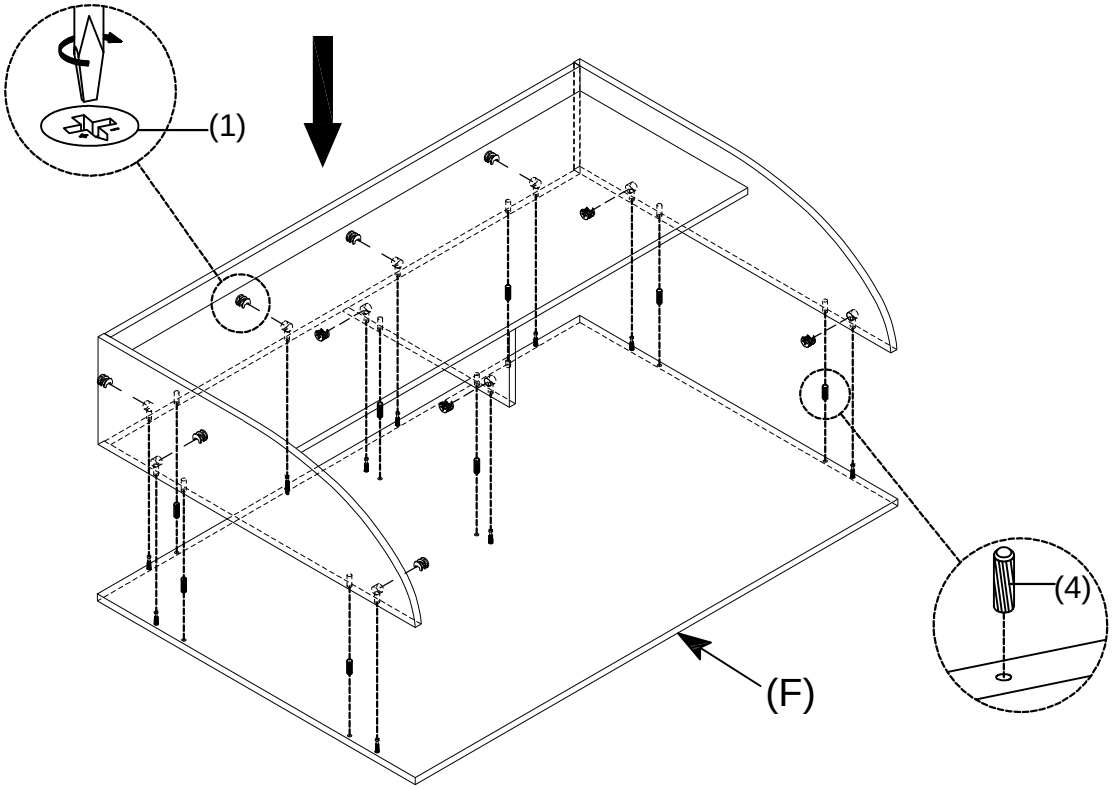

1		Cam Lock	10 pcs	4		Ø8x30mm Wood Dowel	8 pcs

STEP 8

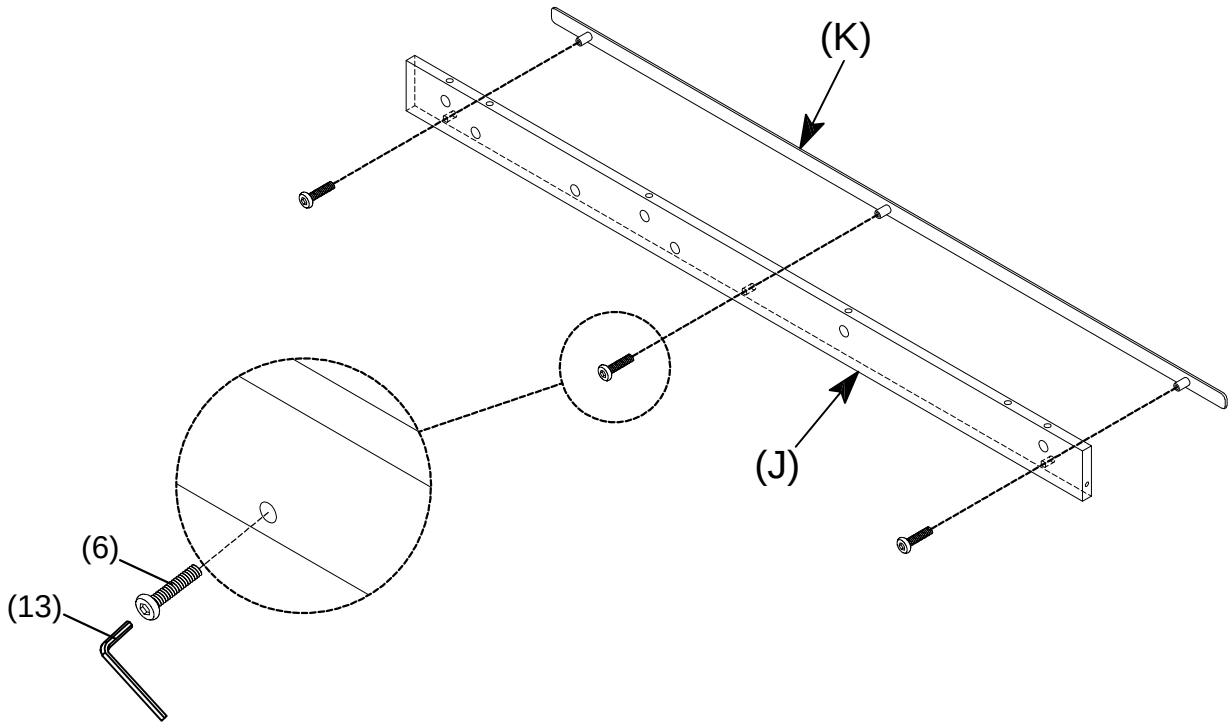

6		Bolt 1/4" x 25mm	3 pcs	13		Allen Key 4mm	1 pc

STEP 9

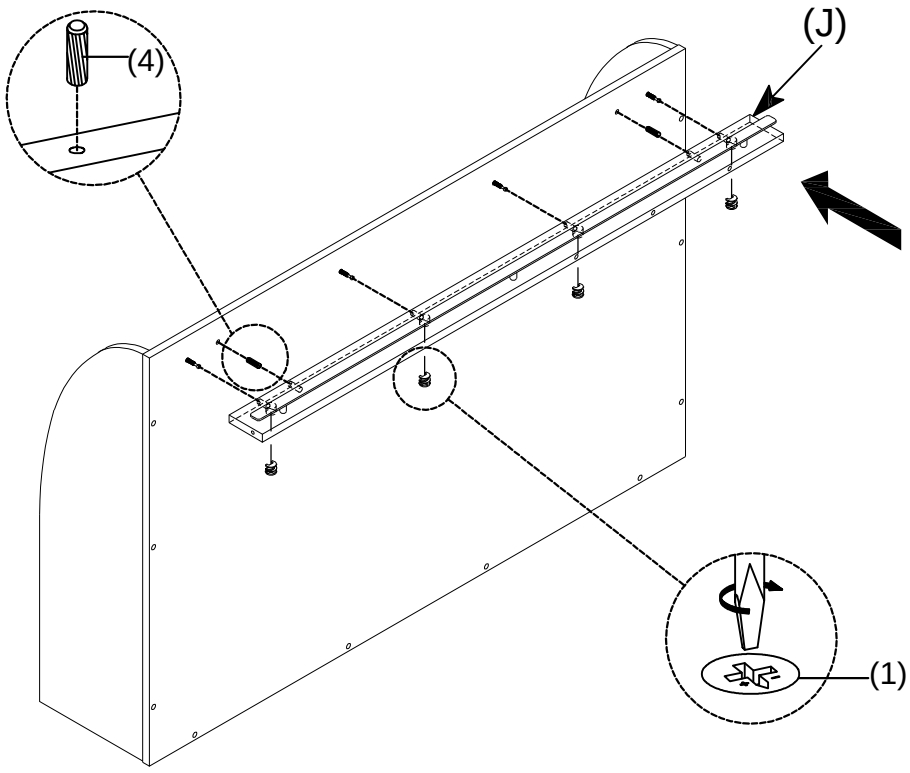

1		Cam Lock	4 pcs	4		Ø8x30mm Wood Dowel	2 pcs

STEP 10

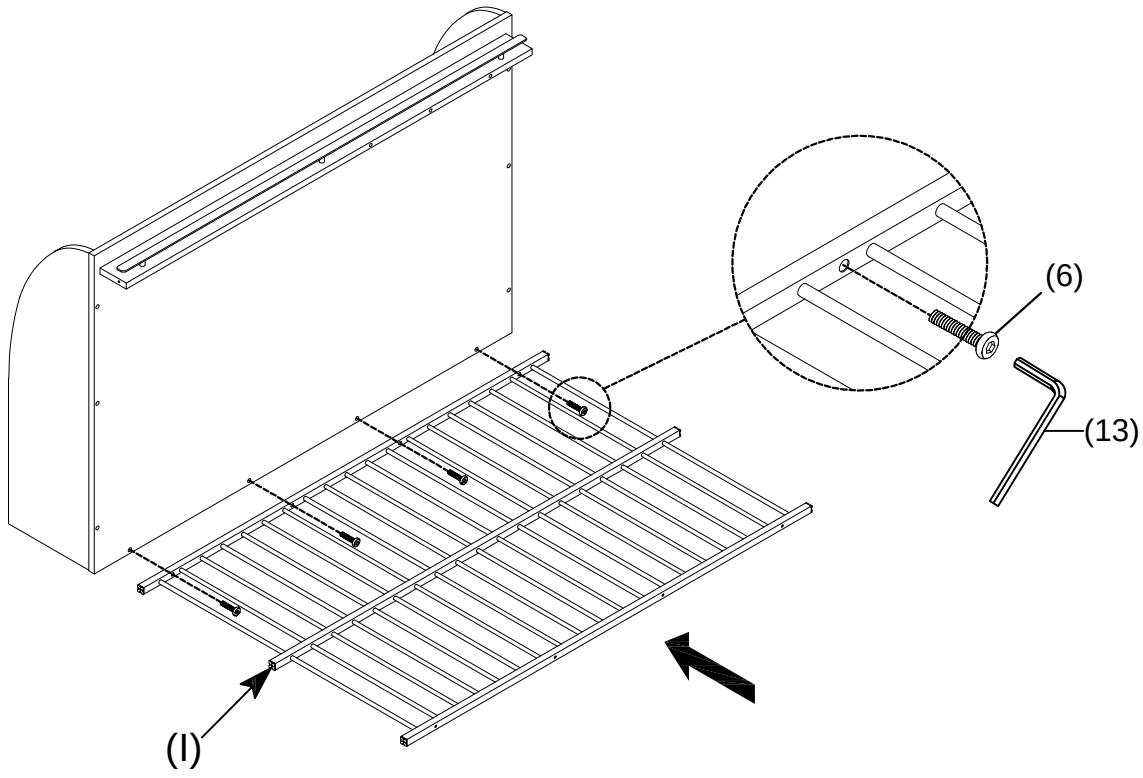

6		Bolt 1/4" x 25mm	4 pcs	13		Allen Key 4mm	1 pc

STEP 11

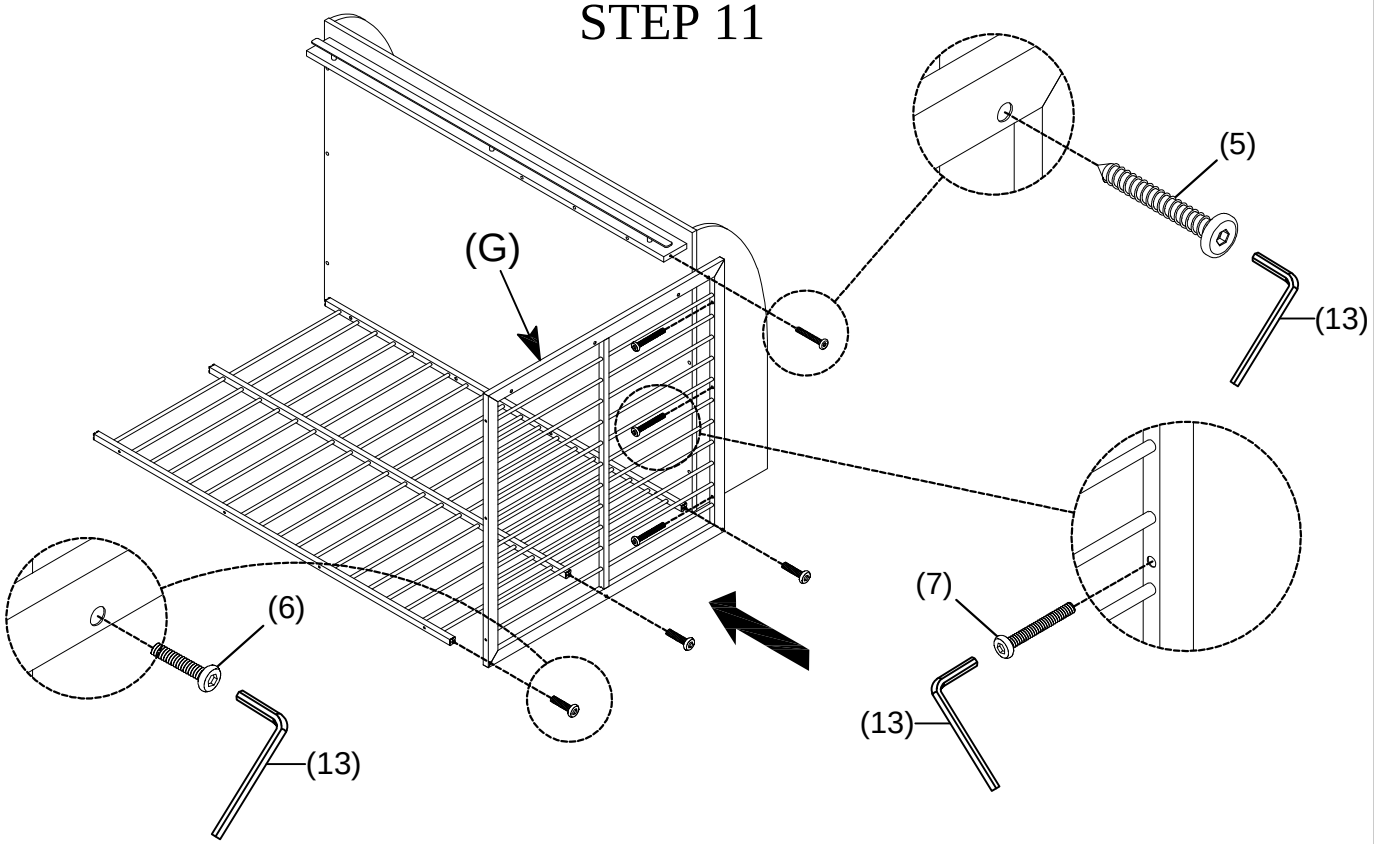

5		Ø1/4*45mm Bolt Screw	1 pcs	7		Bolt 1/4" x 38mm	3 pcs
6		Bolt 1/4" x 25mm	3 pcs	13		Allen Key 4mm	1 pc

STEP 12

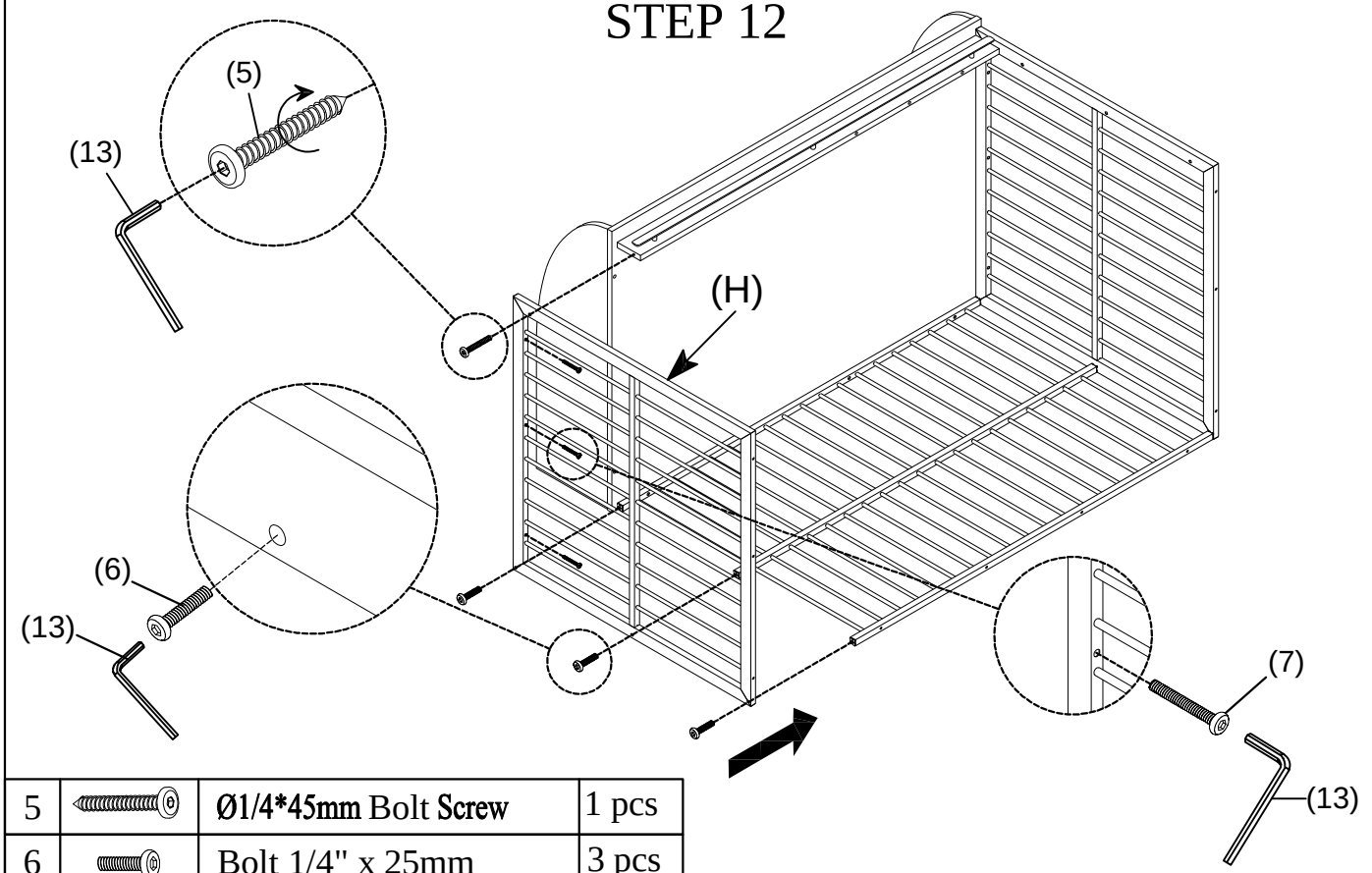

5		Ø1/4*45mm Bolt Screw	1 pcs	13		Allen Key 4mm	1 pc
6		Bolt 1/4" x 25mm	3 pcs				
7		Bolt 1/4" x 38mm	3 pcs				

STEP 13

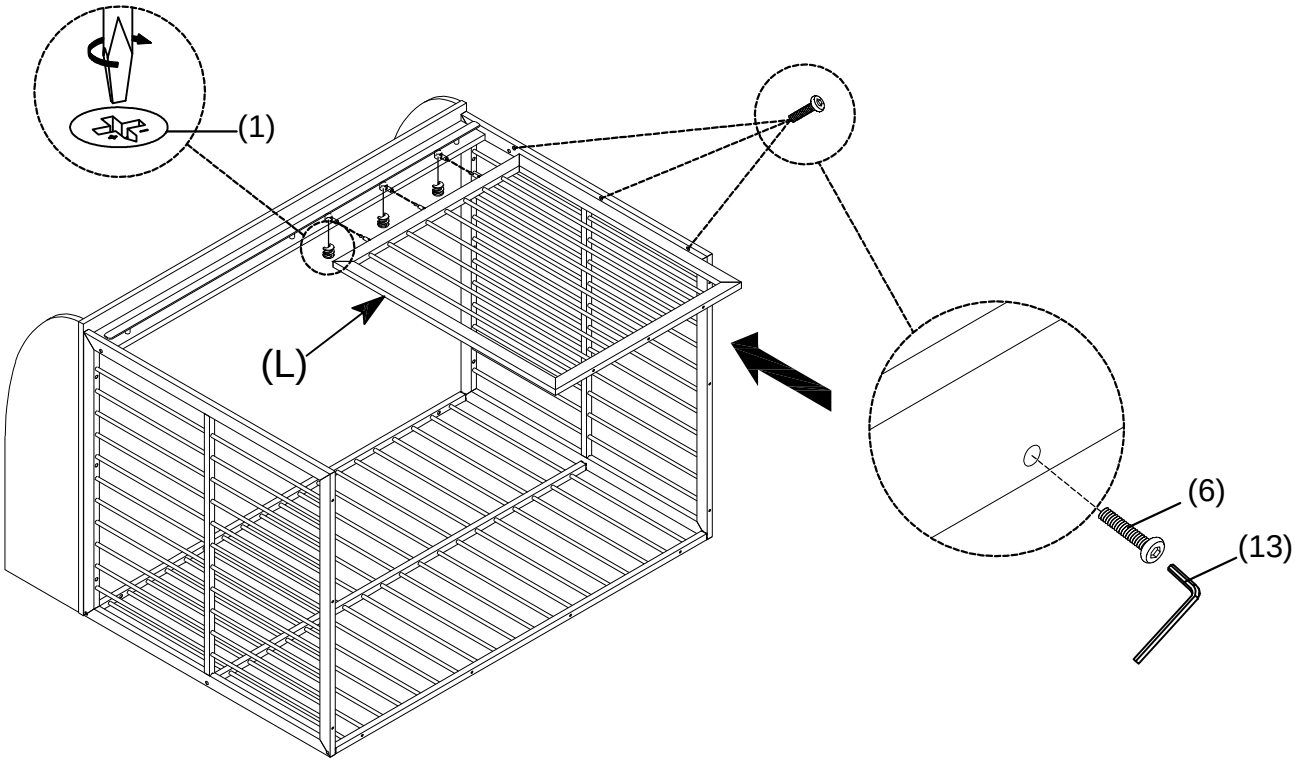

1		Cam Lock	3 pcs
6		Bolt 1/4" x 25mm	3 pcs

13		Allen Key 4mm	1 pc

STEP 14

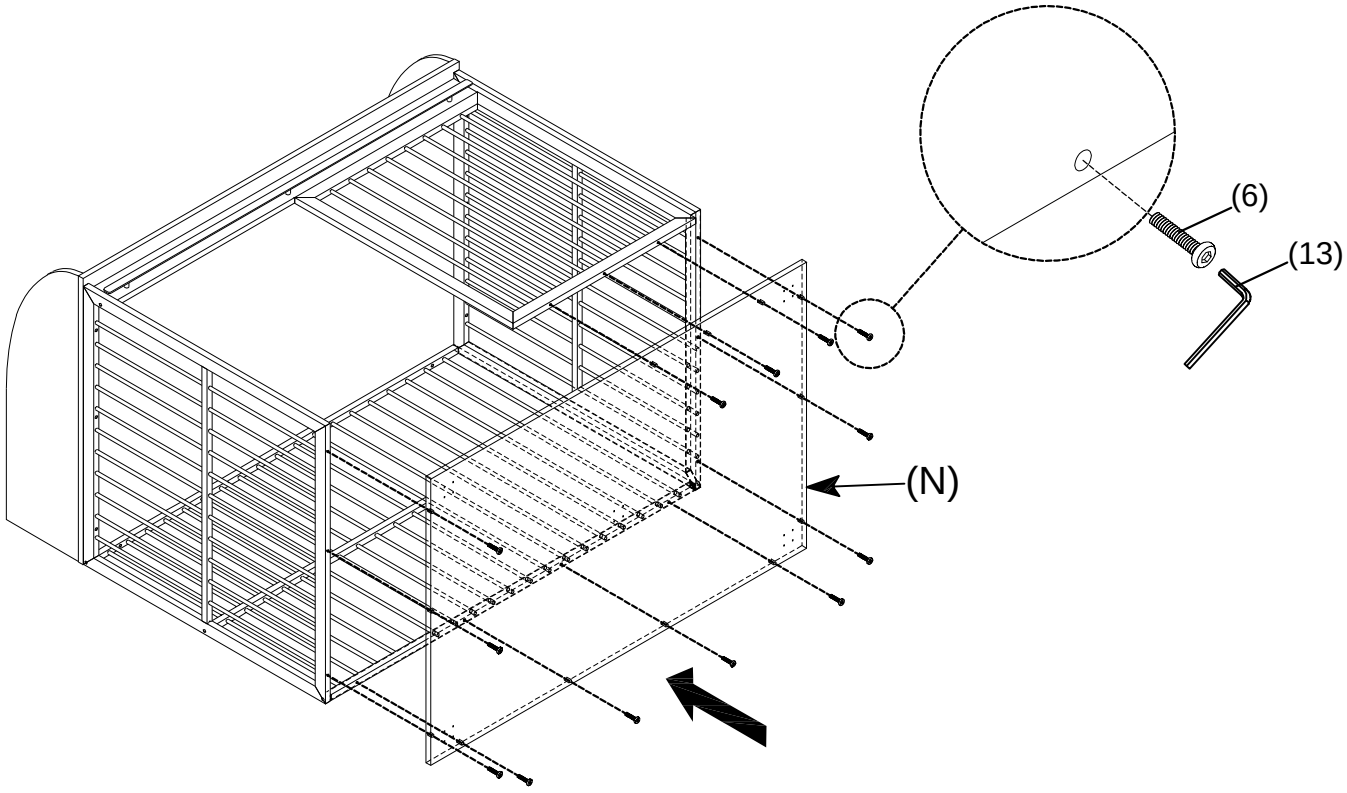

6		Bolt 1/4" x 25mm	13 pcs

13		Allen Key 4mm	1 pc

STEP 15

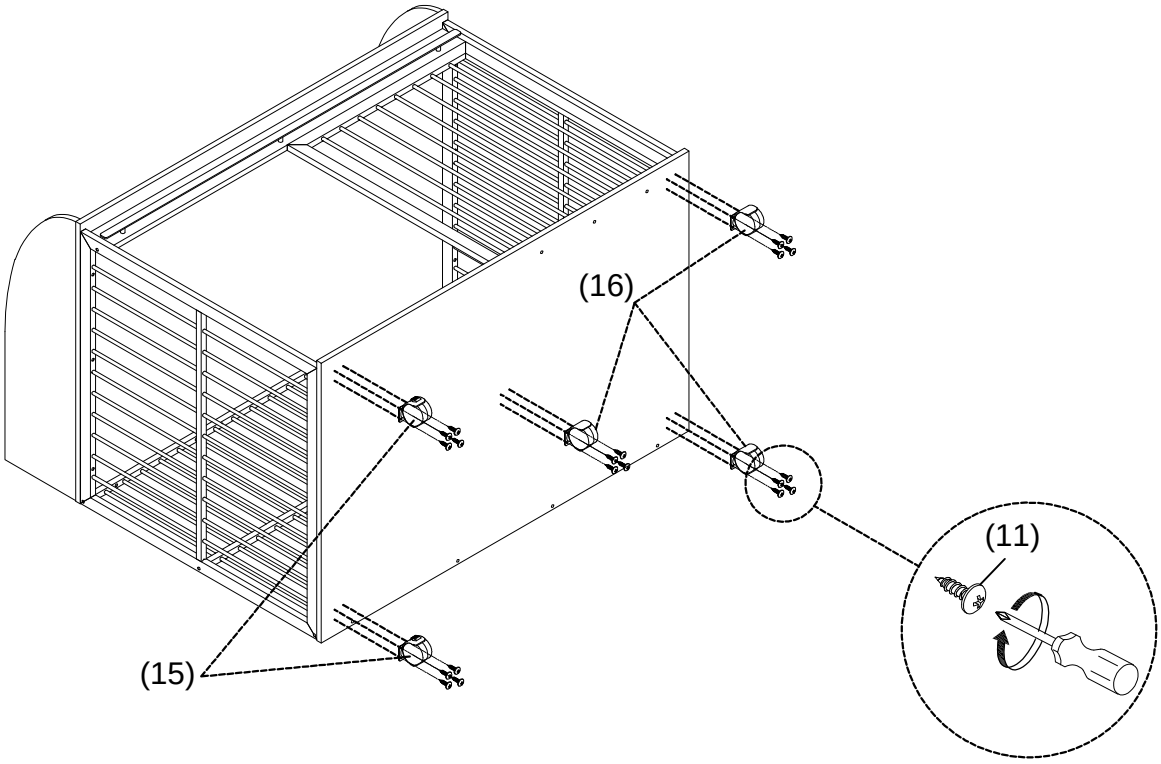

11		M4*15mmWood Screw	20 pcs

STEP 16

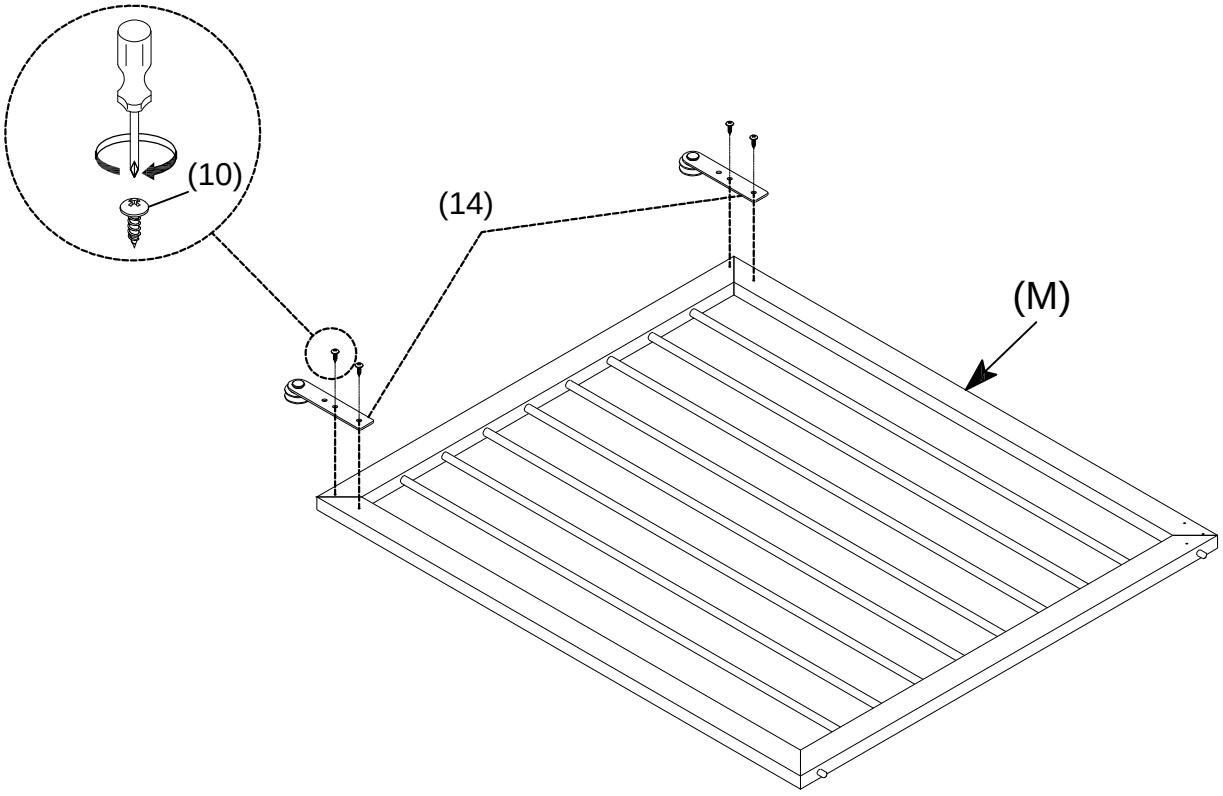

10		M3.5*12mmWood Screw	4 pcs

STEP 17

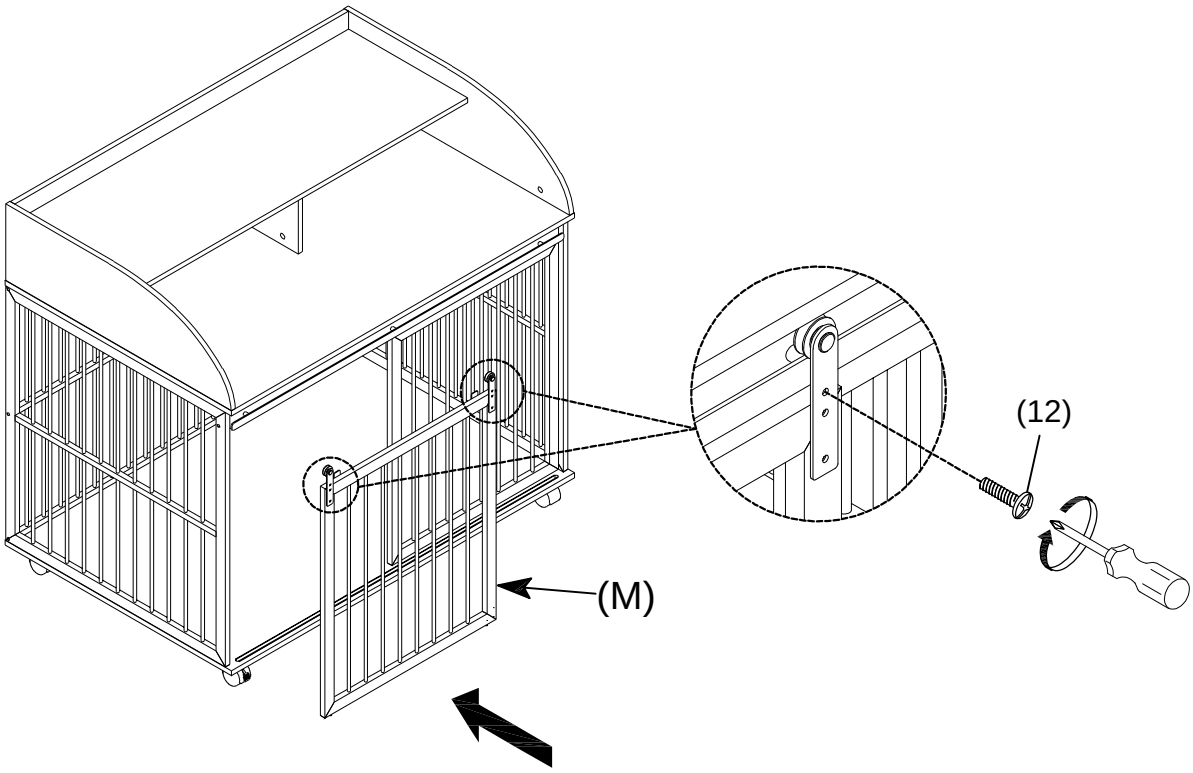

12	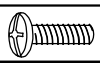	M4x15mm Bolt with Screw Head	2 pcs

STEP 18

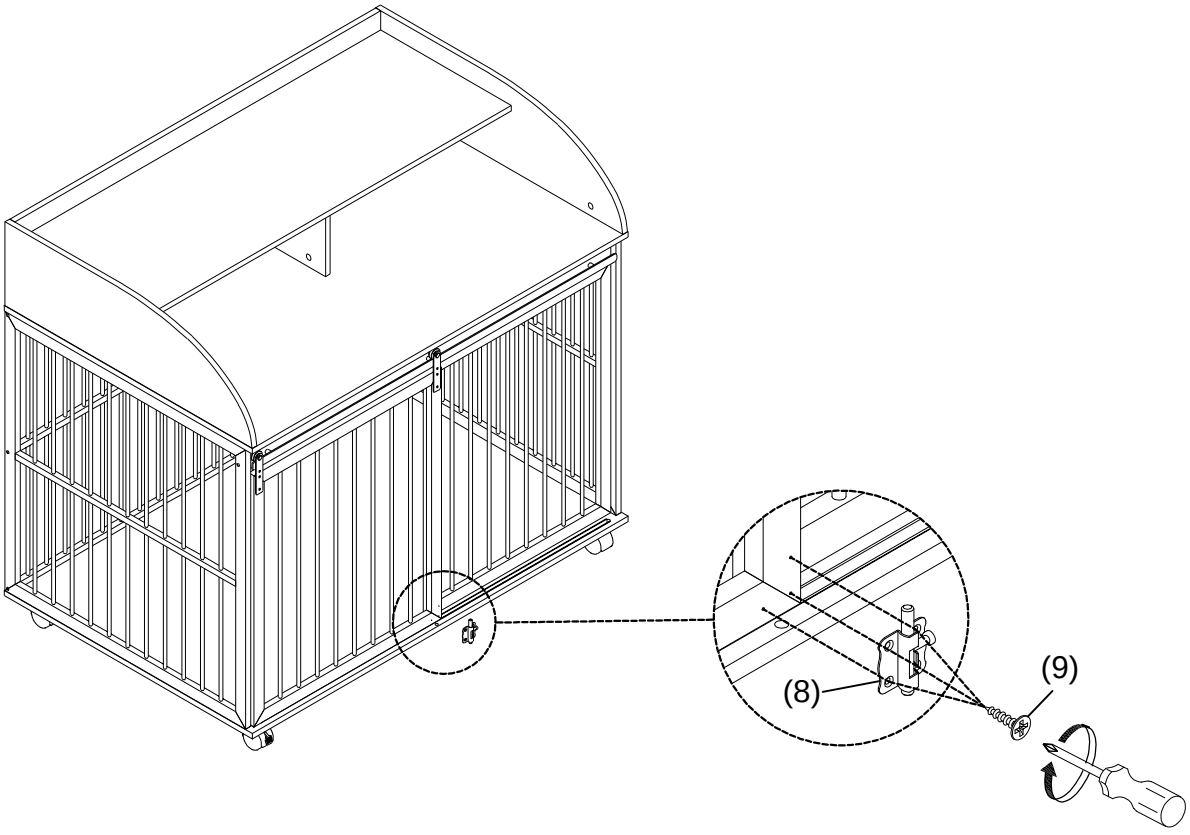

9		M3*12mm Flat Head Screw	3 pcs

COMPLETE

