Ethnicraft

WALNUT SPINDLE bench

General

Function	: Bench
Range	: Spindle
Designer	: Nathan Yong

Specifications

Ref	: 45180
Wood	: Solid walnut
Finishing	: Tinted walnut, oil finish
Assembly required	: Yes
FSC	: No
Made in	: Indonesia

Measurements

Dimension	:150 cm / 35 cm / 60 cm
Weight	:12,5 kg

Packaging

Box 1	:154 cm / 39 cm / 63 cm
Weight Box 1	: 23 kg
Volume	: 0,378 cbm
# PC / Box	: 1

Technical Drawing

FRONT VIEW

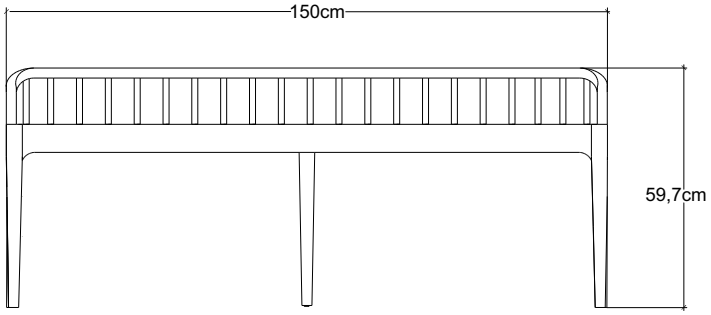

SIDE VIEW

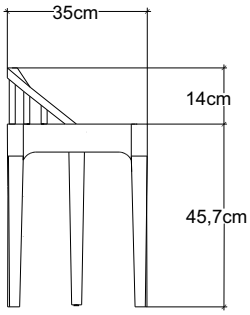

Ethnicraft

Maintenance

All walnut furniture is first tinted with coloured oil and then finished with natural oil. This finish forms a natural coating, protecting it against most substances and fluids, but is no complete guarantee against stains.

For daily care

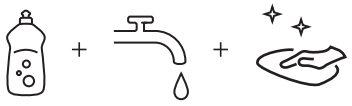

- For regular dusting, use a dry, non-fluffy cloth.
- For cleaning, use a damp sponge or cloth (not too wet!) with a mild solution of water and natural soap (no detergent).

Cleaning & refreshing the surface

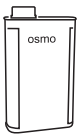

- For refreshing the surface of the furniture when the wood starts to feel dry or for removing stains, Ethnicraft recommends Osmo Liquid Wax Cleaner (3029). Do not use this product daily. The Liquid Wax Cleaner is no guarantee against stains.

Stubborn stains & repairs

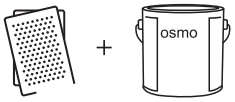

- Through time and depending on wear, the original hardwax coating on the furniture may need to be renewed. Make sure the surface is clean and dry. Use extra fine sand paper (minimum 320 grit) and work in the direction of the wood grain, then apply the Osmo Hardwax Oil Natural (5063). The oil protection is no guarantee against stains.

Lifestyle images

add picture