INSTALLATION INSTRUCTIONS

PARTS LIST

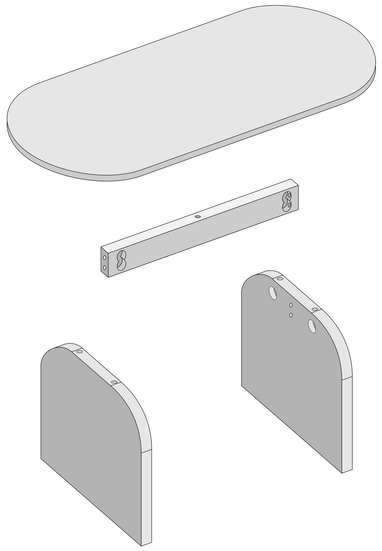

Table top

Connecting board

Table leg x2

Double head screw x8

Nut x8

Long screw x1

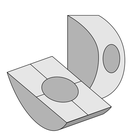

Semicircular connector x8

The extra parts are for spare

MARBLE CLEANING. MAINTENANCE. PRECAUTIONS

· REGULAR CLEANING:

The marble should be cleaned with special cleaning agents to avoid damaging the surface structure. In general, a neutral cleaner, such as alcohol or warm water, should be used and then wiped with a clean cloth to maximize the cleaning of the surface

· DECONTAMINATION:

To remove dirt on the marble, you can use a one-time wet, and then rinse it off with water. If there is oil, you can use dish soap, but be careful not to use too much, So as not to break the internal structure of the marble.

· MAINTENANCE:

The marble should be regularly maintained with paraffin wax to increase the surface light, and to effectively protect the surface from pollution erosion. In addition, it is also important to polish the marble regularly to maintain the finish and water resistance.

· NOTE:

When cleaning, note: do not use detergent containing acid components, do not use metal or other hard objects to clean the marble, so as not to wear the surface.

STEP 1

Install the table legs and connecting board together and connect them with double-headed screws

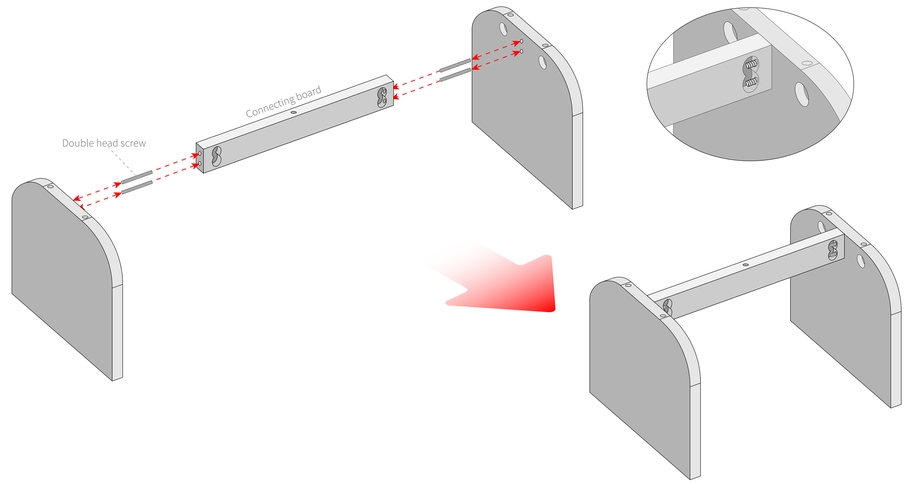

STEP 2

Secure with a Semicircular connector and nut

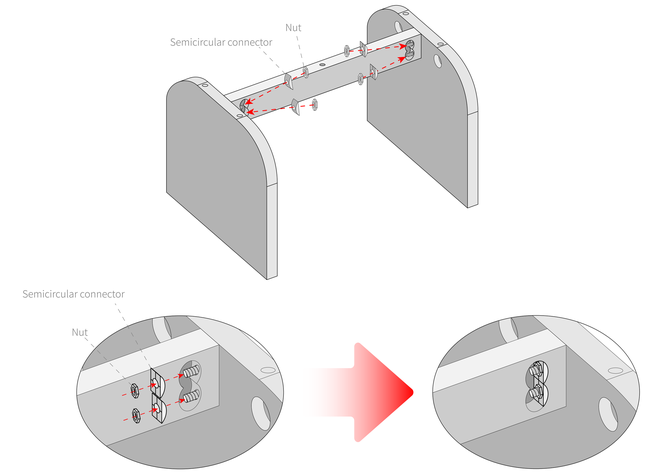

STEP 3

Turn the "Table leg" and "Table top" upside down and place them on the ground.
Attach the legs to the back of the table top using double-headed screws.
Install a long screw into the hole of the connecting board

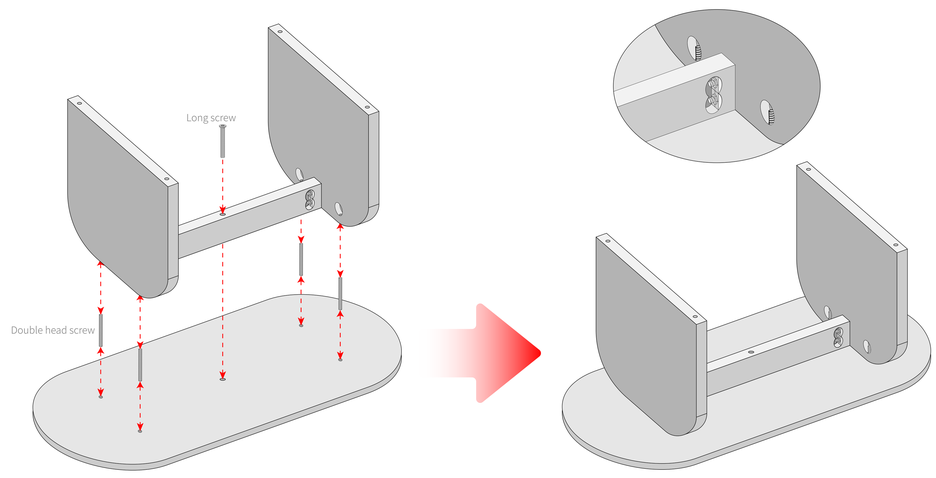

STEP 4

Secure with a Semicircular connector and nut

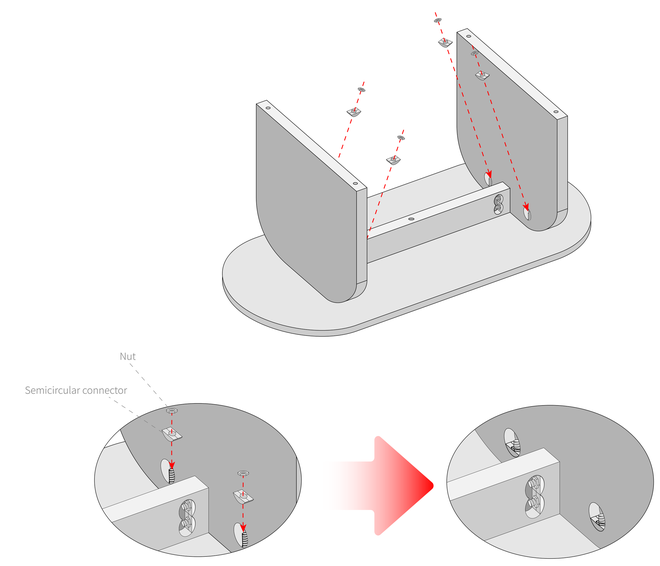
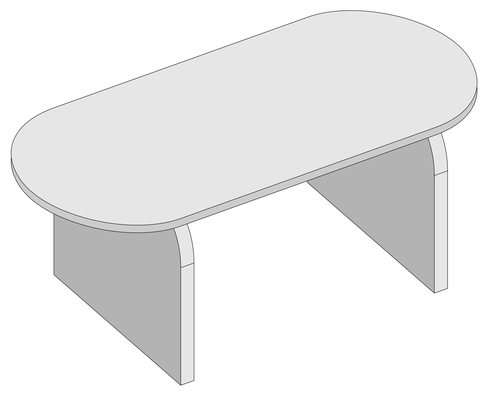
INSTALLATION COMPLETE