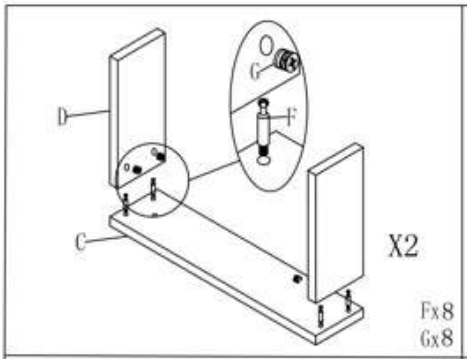

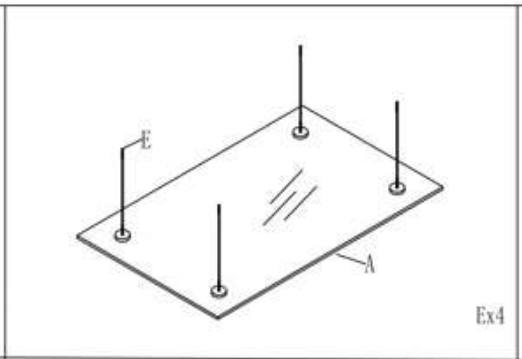

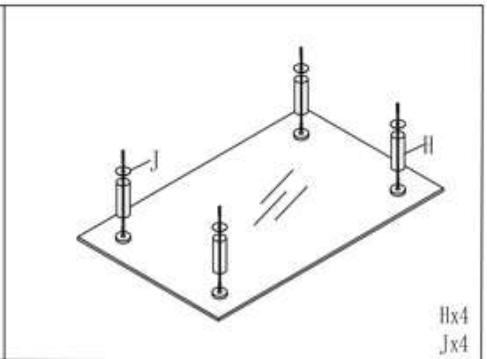

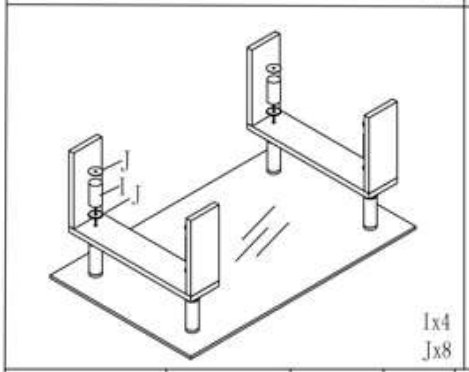

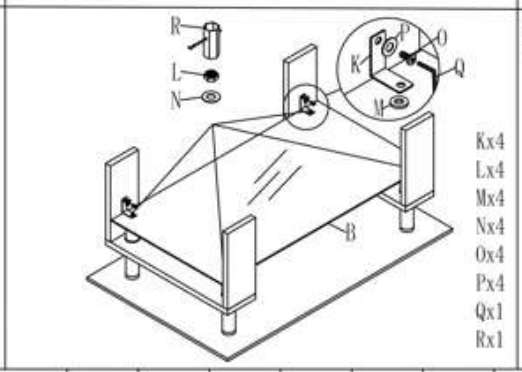

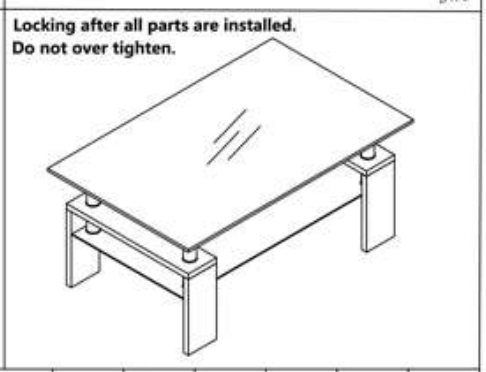

A	B	C	D	E	F	G	H	I	J	K	L	M	N	O	P	Q	R
1000*600*6mm	800*460*5mm	502*120*18 mm	284*120 *18mm	Ø8*245 mm			Ø38*130 mm	Ø38*70 mm	Ø38mm		Ø8mm	Plastic Ø8*22mm	Metal Ø8*22mm	Ø6*16mm	Metal Ø6*16mm		
1	1	2	4	4	8	8	4	4	12	4	4	4	4	4	4	1	1