# Extendable Dining Table Production

## Overall: 84.25″ - 120.25″ x 44″ x 30.25″

Width With One Table Leaf: 102″

Width Without Table Leaves: 84.25″
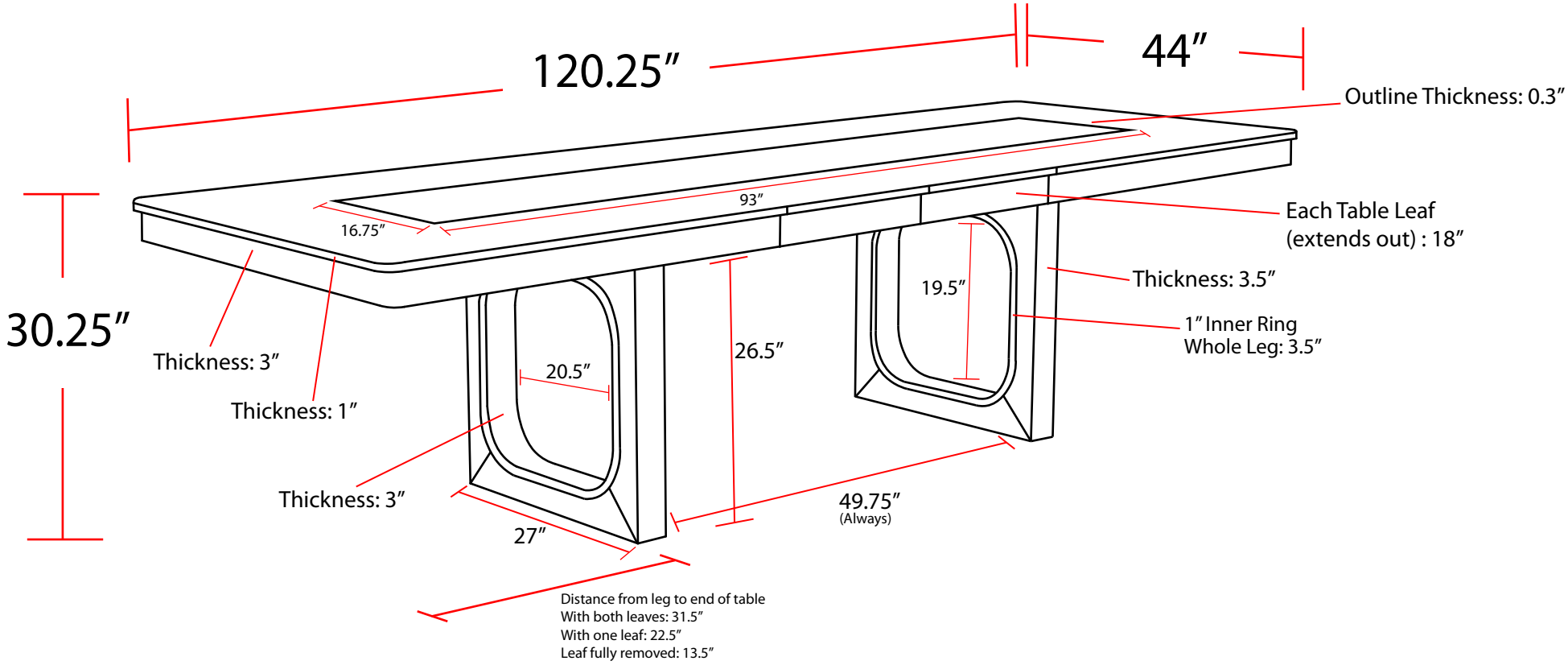
Table Overhangs: 1″