ASSEMBLY INSTRUCTIONS
ITEM:MJYJ01

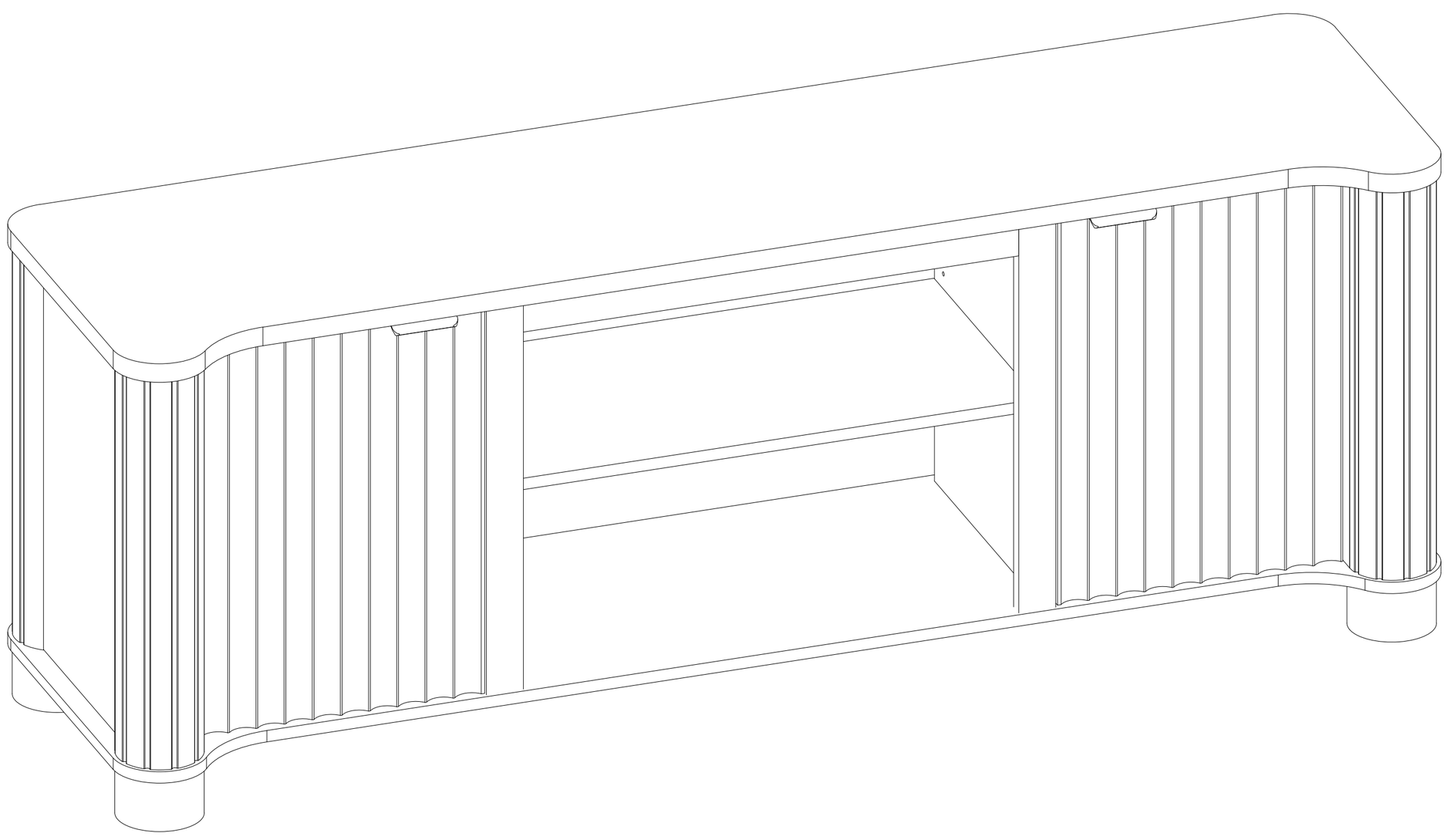

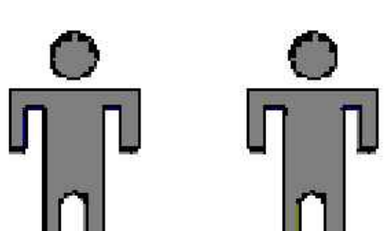

support@solacefurniture.com

PARTS INCLUDED

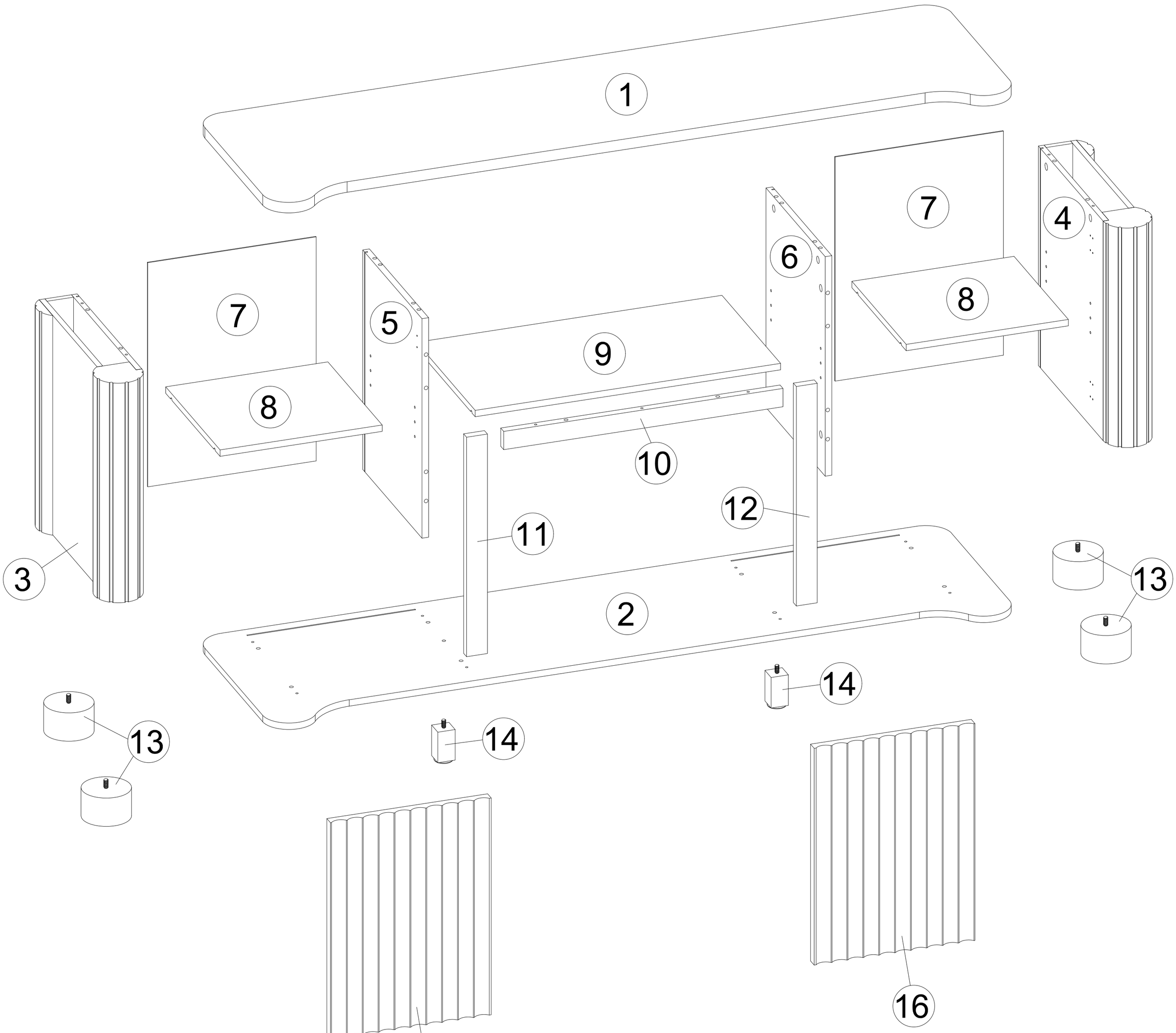

HARDWARE INCLUDED

ϕ5.8X30MM 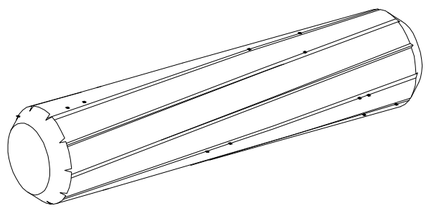 A 22X+1	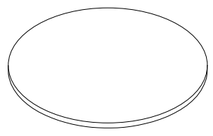 B 12X+1	ϕ6X34MM 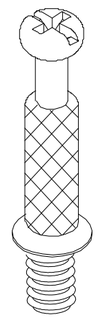 C 12X+1	ϕ15X10MM 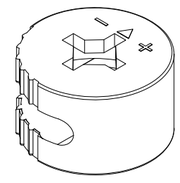 D 12X+1
ϕ3X12MM 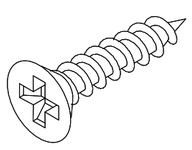 E 8X+1	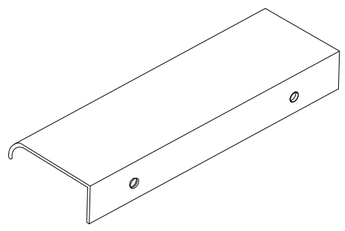 F 2X	ϕ4X50MM 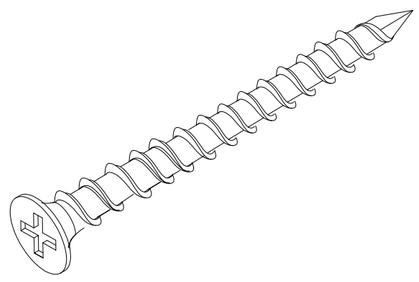 G 11X+1	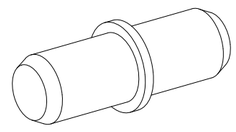 H 12X
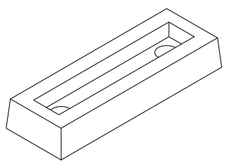 I 2X	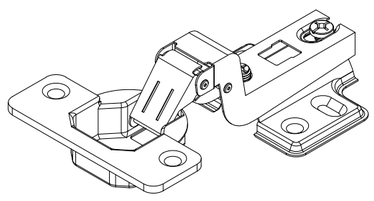 J 4X	ϕ4X14MM 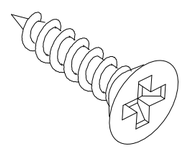 K 24X+1	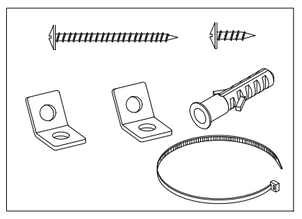 L 2X

HOW TO USE THE CAM LOCK SYSTEM

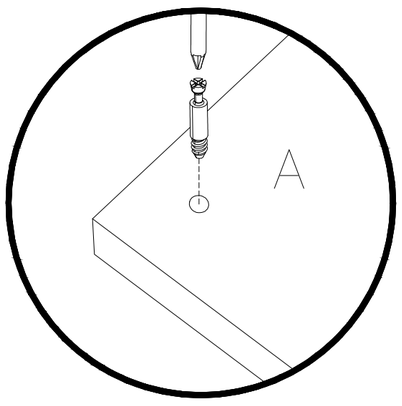

1. Screw the cam bolt into the panel.

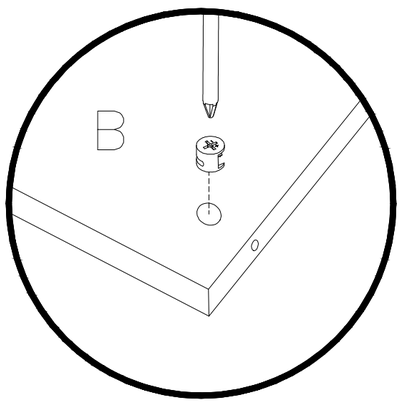

2. Insert the cam lock with the arrow pointing toward the panel edge.

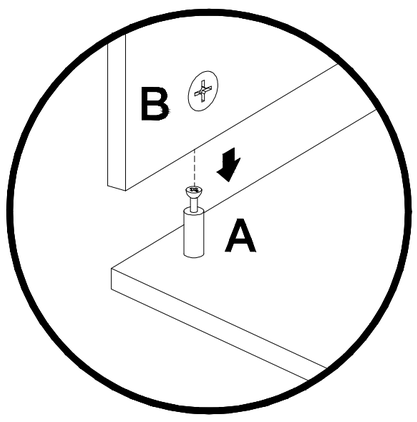

3. Align the cam bolt with the cam lock and fully insert it into the cross-bored hole.

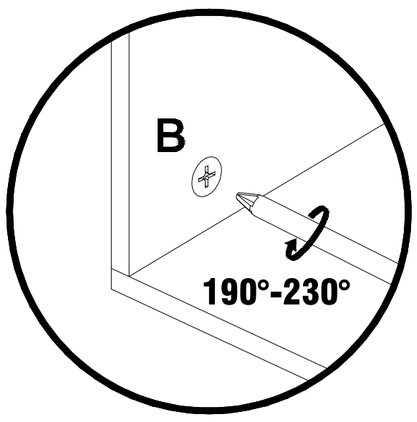

4. Turn the cam lock clockwise 190-230 degrees to secure the panels.

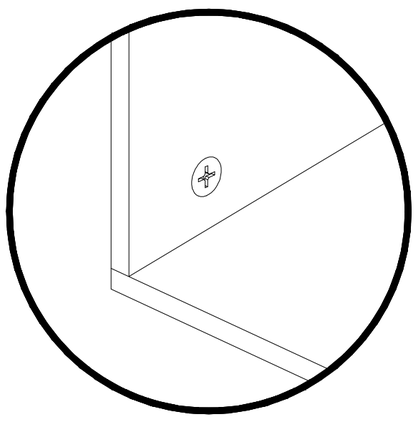

5. Confirm the panels are tight and the joint is rigid.

Insert wood dowel (A) at least halfway. Tap lightly with a rubber mallet only if necessary.

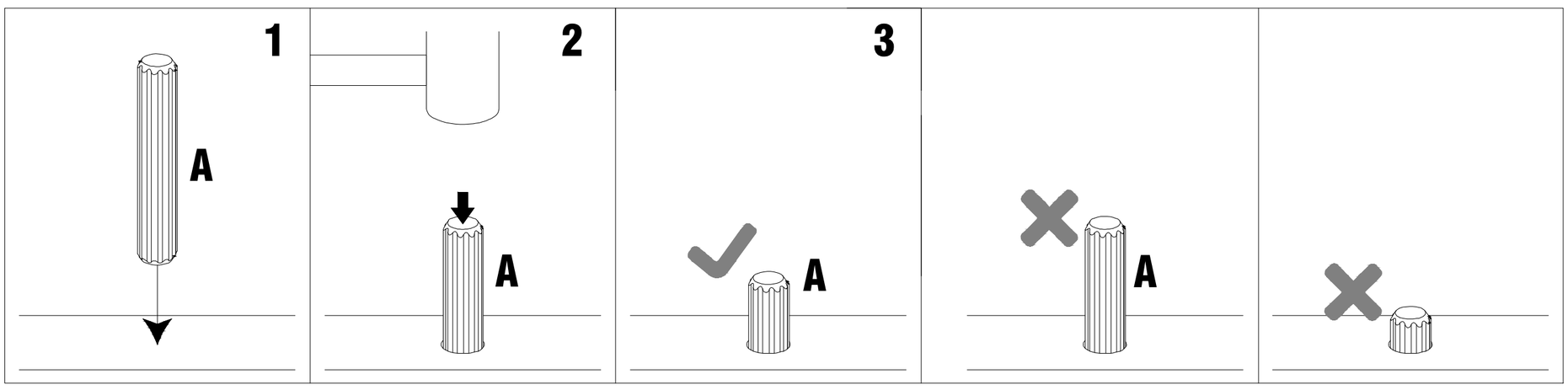

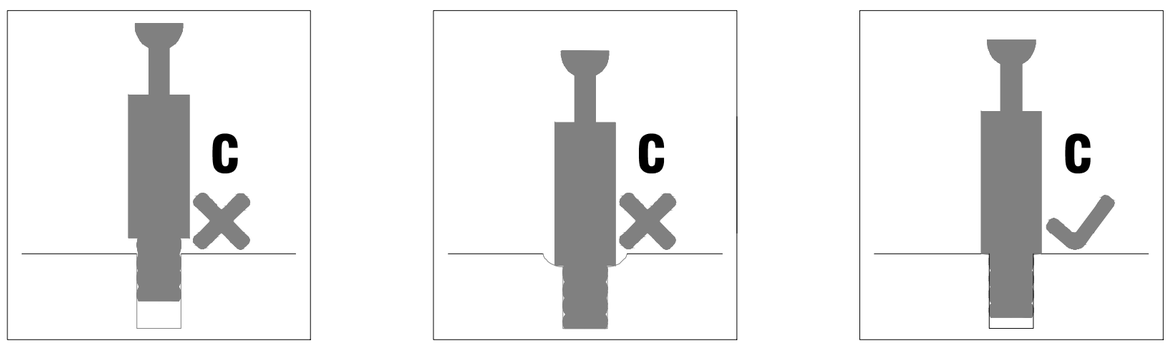

⚠ WARNING

- Place the unit on a level surface; use the included levelers when applicable.
- Do not sit or stand on the unit, and do not allow children to climb on it.
- Install the anti-tip restraint and secure the unit to the wall before use.
- A tipping unit can cause serious injury or death.
- Do not exceed the stated weight limits.
- Distribute weight evenly and place heavier items on lower shelves.
- Before drilling, verify the locations of electrical wiring, plumbing, and gas lines.

ASSEMBLY OVERVIEW

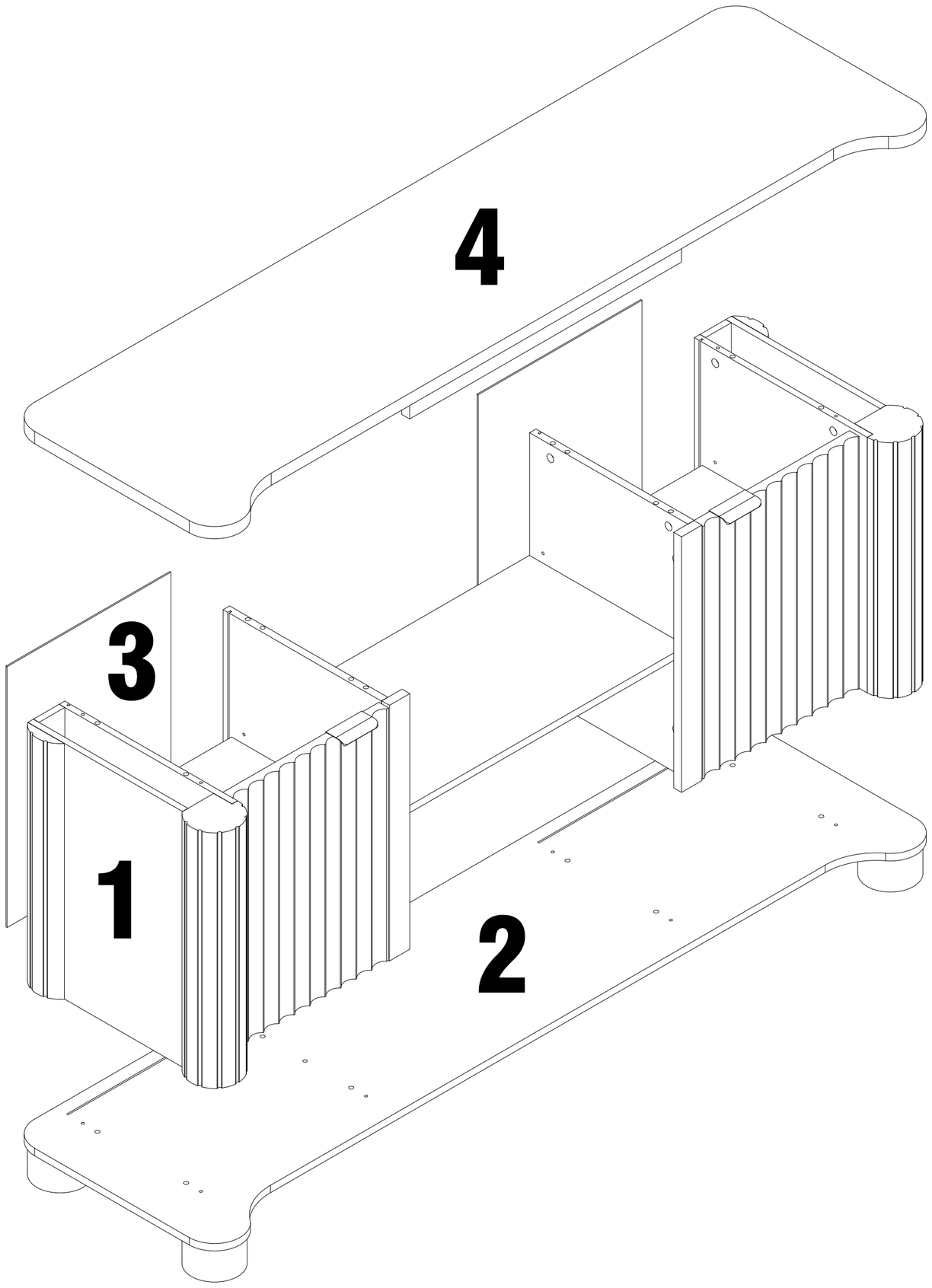

ASSEMBLY SEQUENCE

1. Assemble the cabinet body.

2. Assemble the base frames.

3. Attach the back panel.

4. Attach the top panel.

BEFORE YOU BEGIN

- Two adults are required for safe assembly.

- Use a Phillips screwdriver.
  A low-torque electric screwdriver is optional.

- Assemble on a clean, soft surface.

- Check all parts and hardware before starting.

- Secure the completed unit to the wall before use.

STEP 1

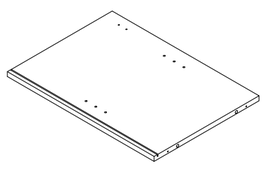 5 X1	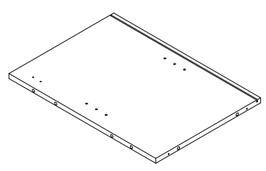 6 X1
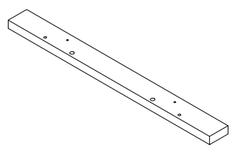 11 X1	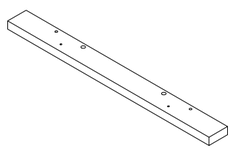 12 X1
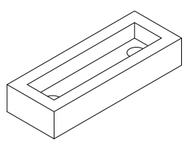 I X2	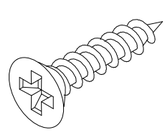 E X4
 C X4	

ACTION

- Place panels 5 and 6 with the red Front arrows facing the same direction. Fasten one bracket I to each panel with two screws E.
- Thread two cam bolts C into each rail 11 and 12. Keep each bolt straight and stop when its shoulder is close to the surface.
- Do not overtighten the small screws or cam bolts.

STEP 2

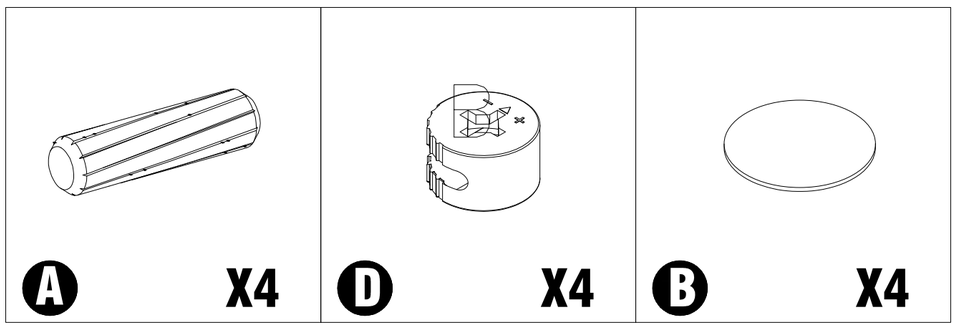

ACTION

- Join rail 11 to panel 5 and rail 12 to panel 6. Insert dowels A first and keep the two assemblies as mirror images.
- Aim each cam lock D toward its bolt, press the joint fully together, and turn the lock clockwise until snug.
- Press caps B into the cam-lock holes only after both joints are tight.

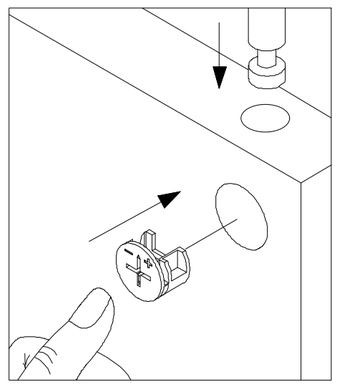

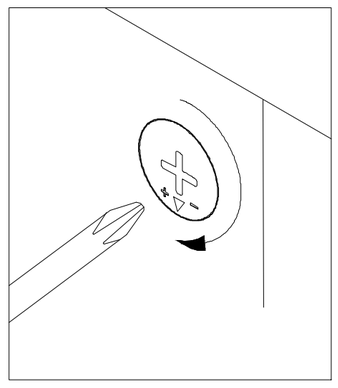

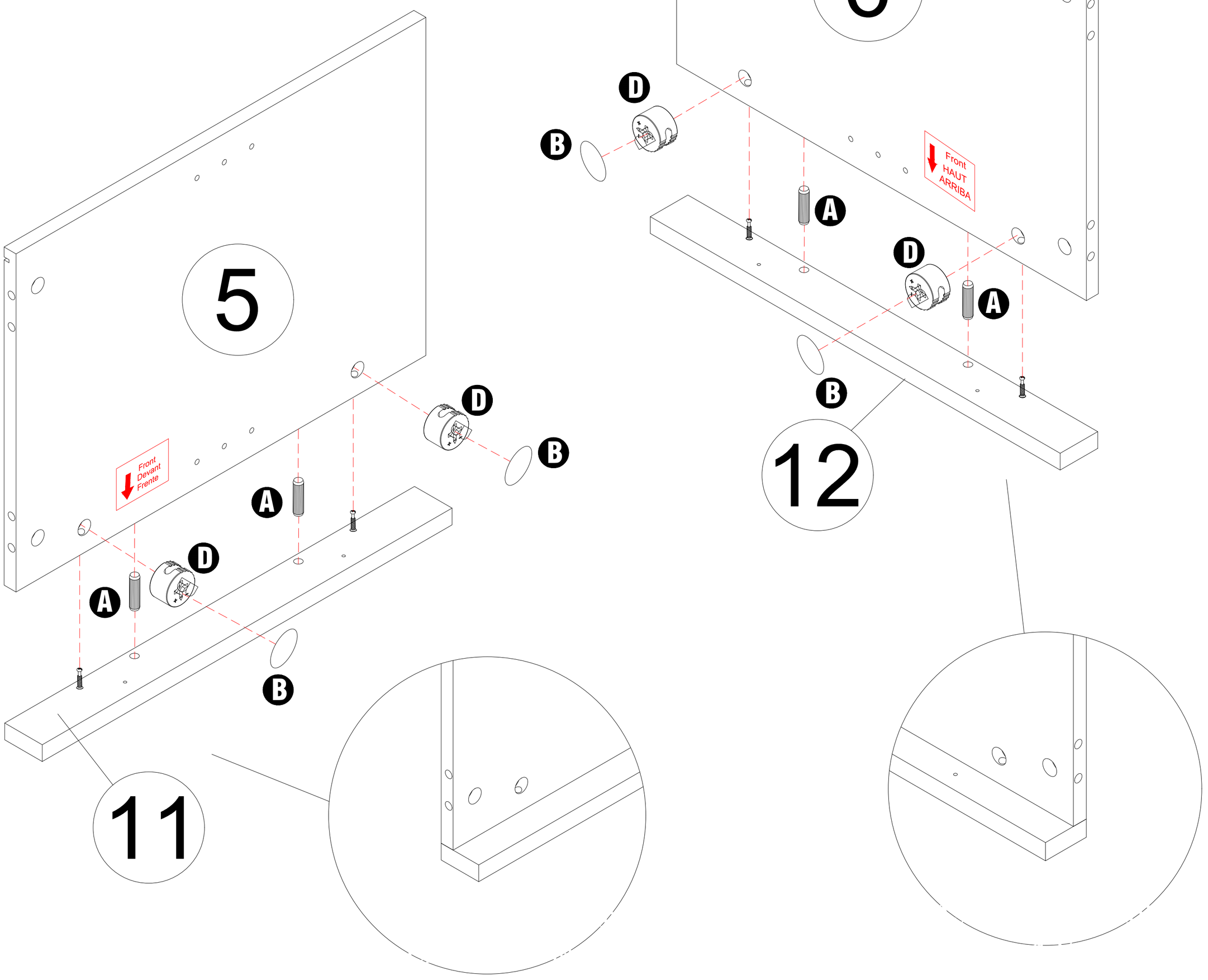

STEP 3

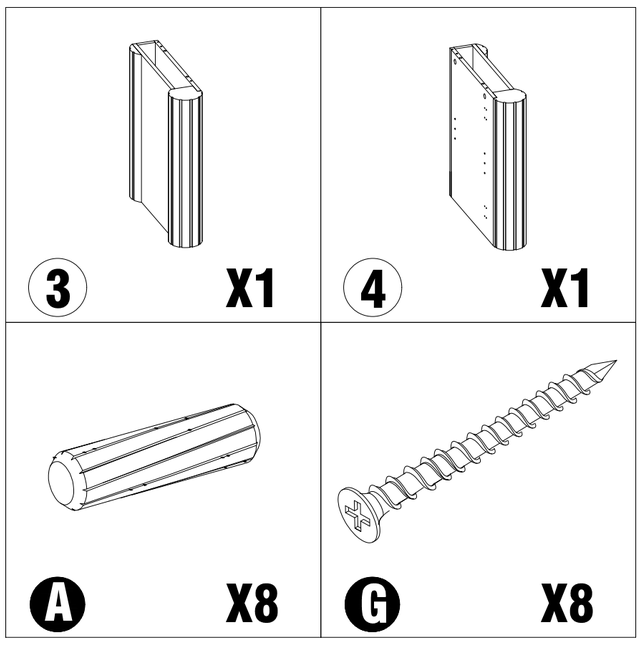

ACTION

- Join panel 3 to panel 5 and panel 4 to panel 6 with the eight dowels A, keeping the finished faces and Front arrows oriented as shown.
- Place both assemblies on bottom panel 2. Start all eight screws G from the underside, then tighten gradually from side to side.
- Keep every upright panel square to the bottom while tightening.

STEP 4

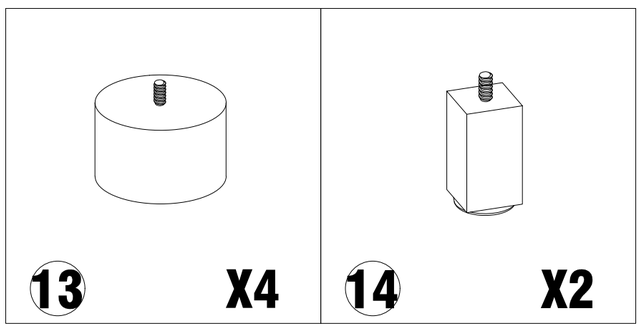

ACTION

- Turn the cabinet carefully onto its side or back on a padded surface.
- Thread the four round feet 13 into the outside holes and the two center supports 14 into the middle holes shown.
- Hand-tighten each support until seated; do not cross-thread.

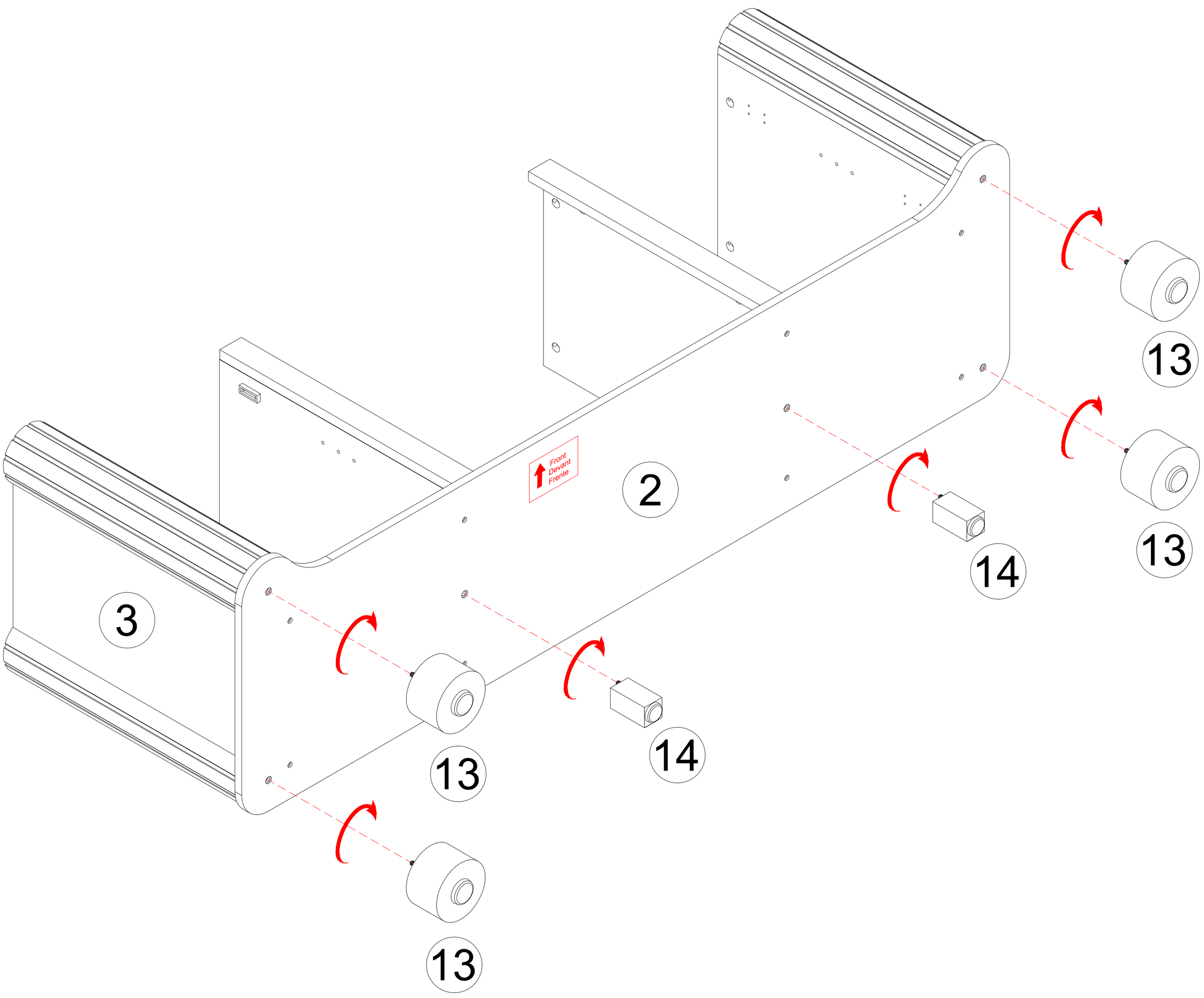

STEP 5

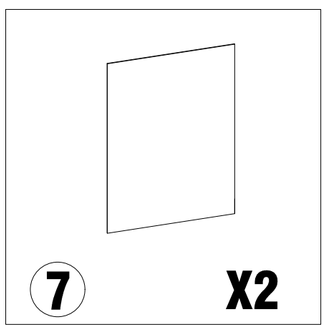

ACTION

- Slide one back panel 7 downward into the rear grooves of each side section.
- Keep the panels vertical and fully seat both lower edges in the grooves. Do not force or bow the panels.

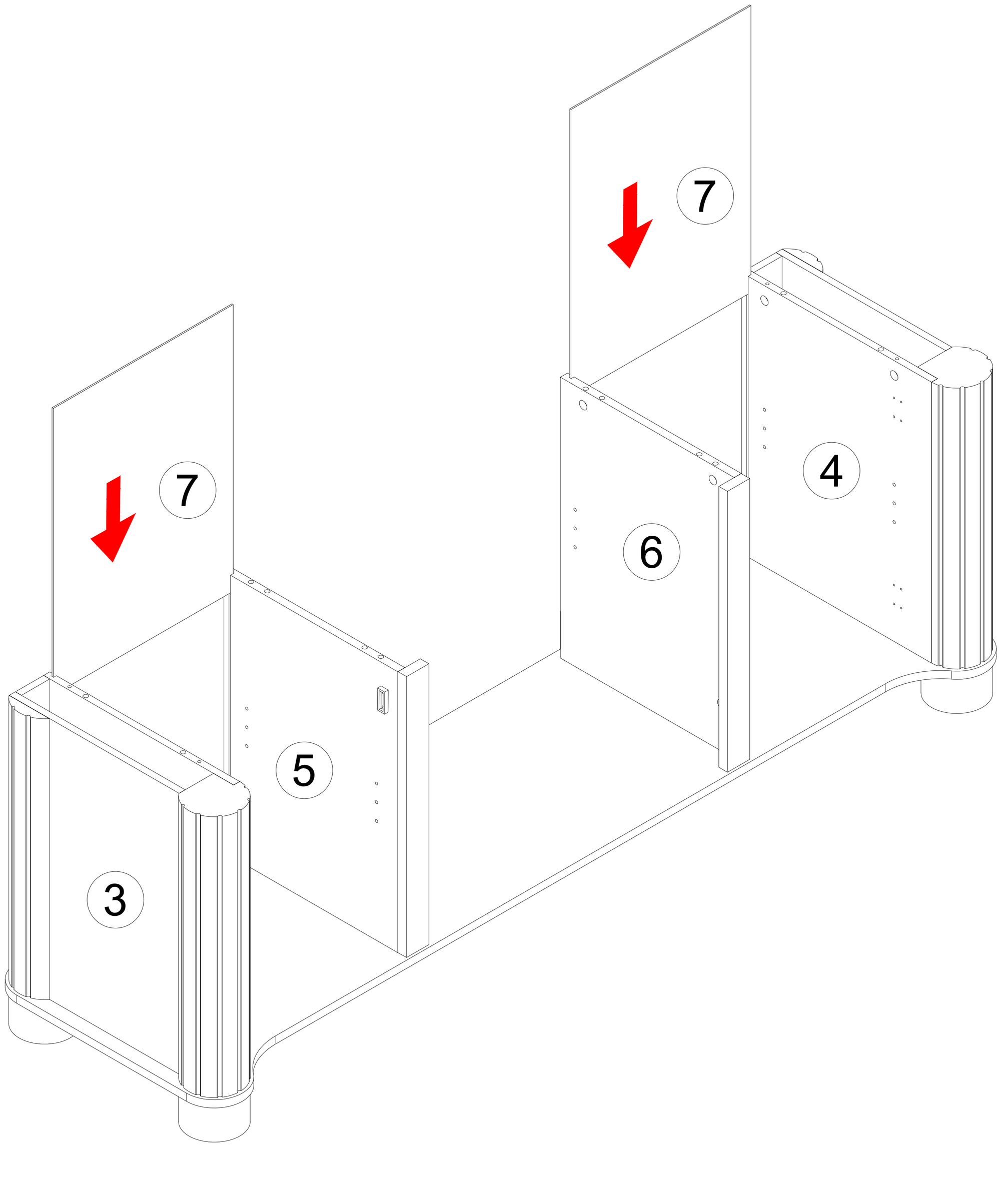

STEP 6

ACTION

- Place top panel 1 face down on a padded surface. Thread eight cam bolts C into the indicated pilot holes.
- Insert two dowels A into rail 10, align it with the center pilot holes, and secure it with three screws G.
- Keep rail 10 straight and centered before tightening.

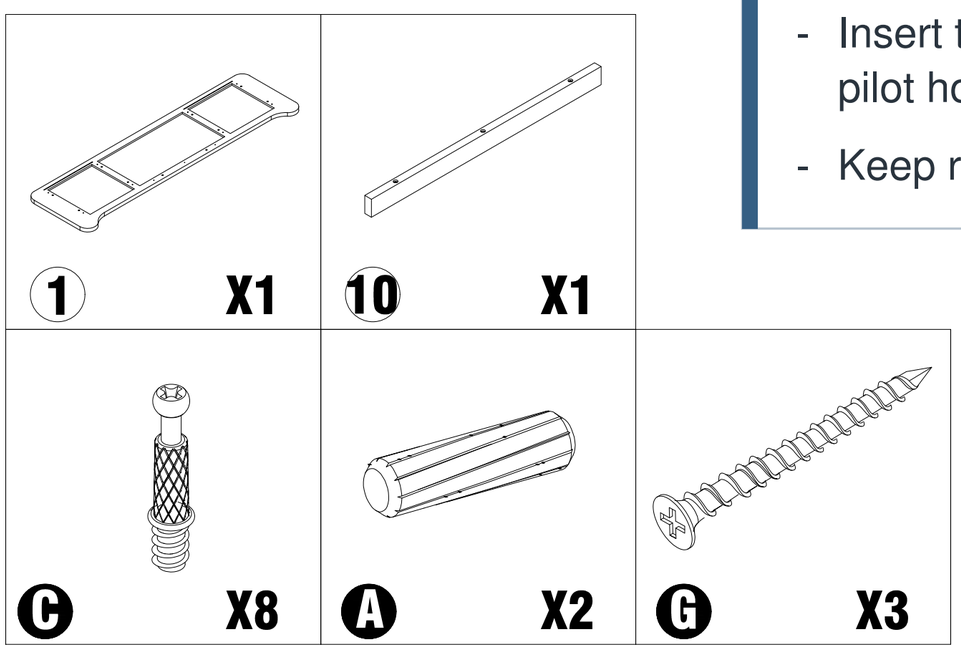

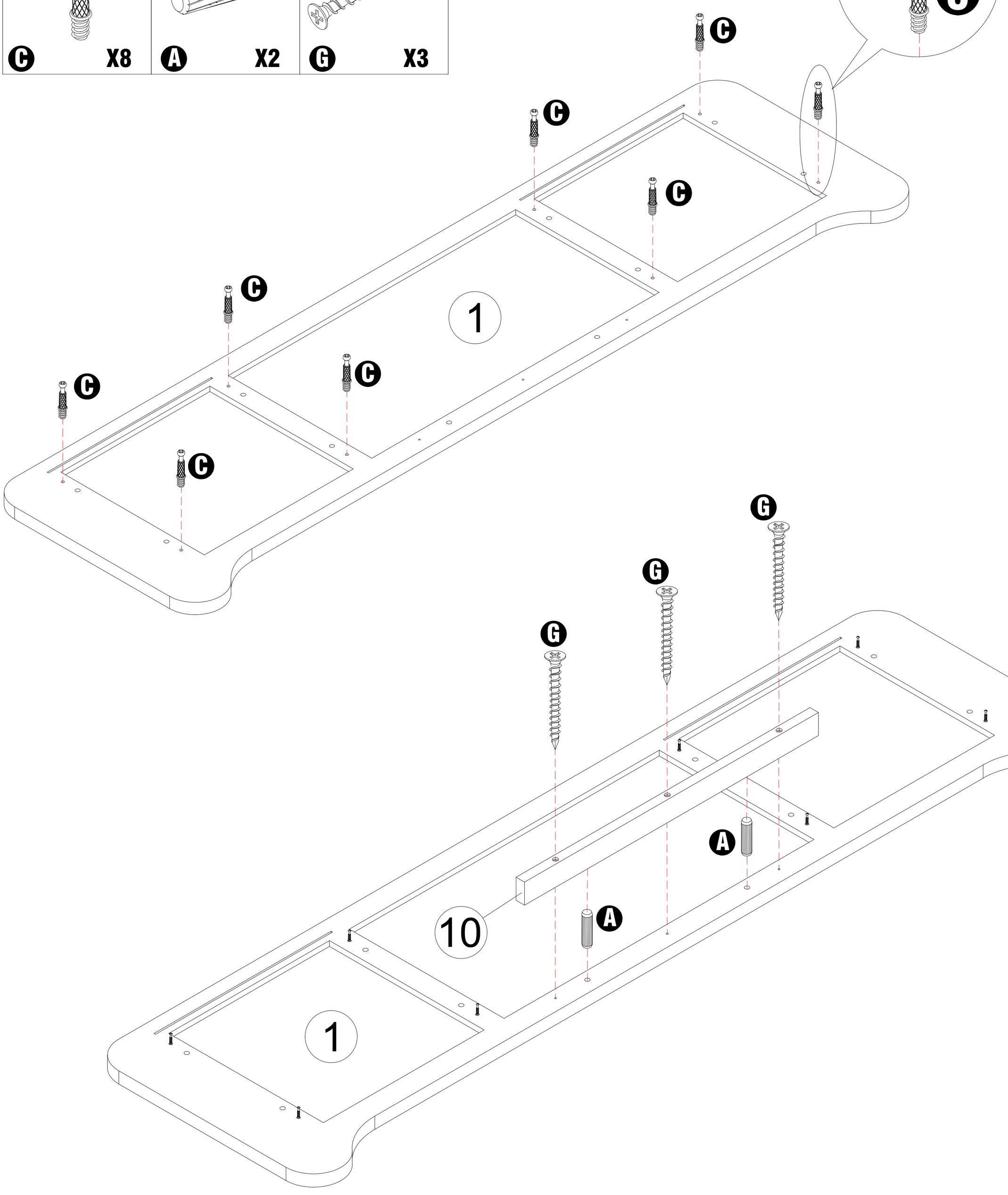

STEP 7

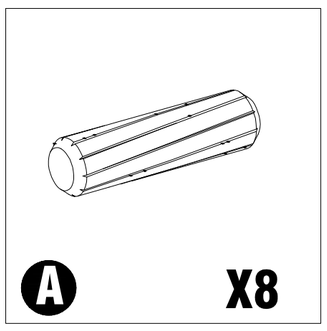

ACTION

- Insert eight dowels A into the top-edge holes of panels 3-6 at the locations shown.
- Seat each dowel at least halfway and keep it perpendicular to the panel.

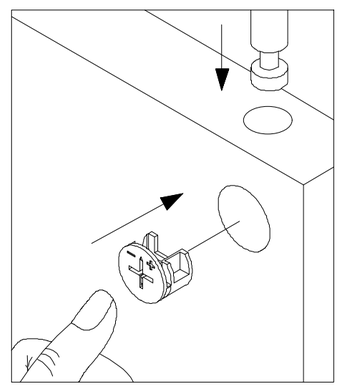

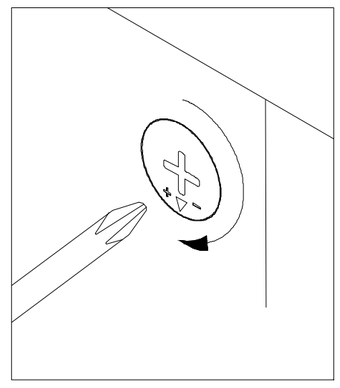

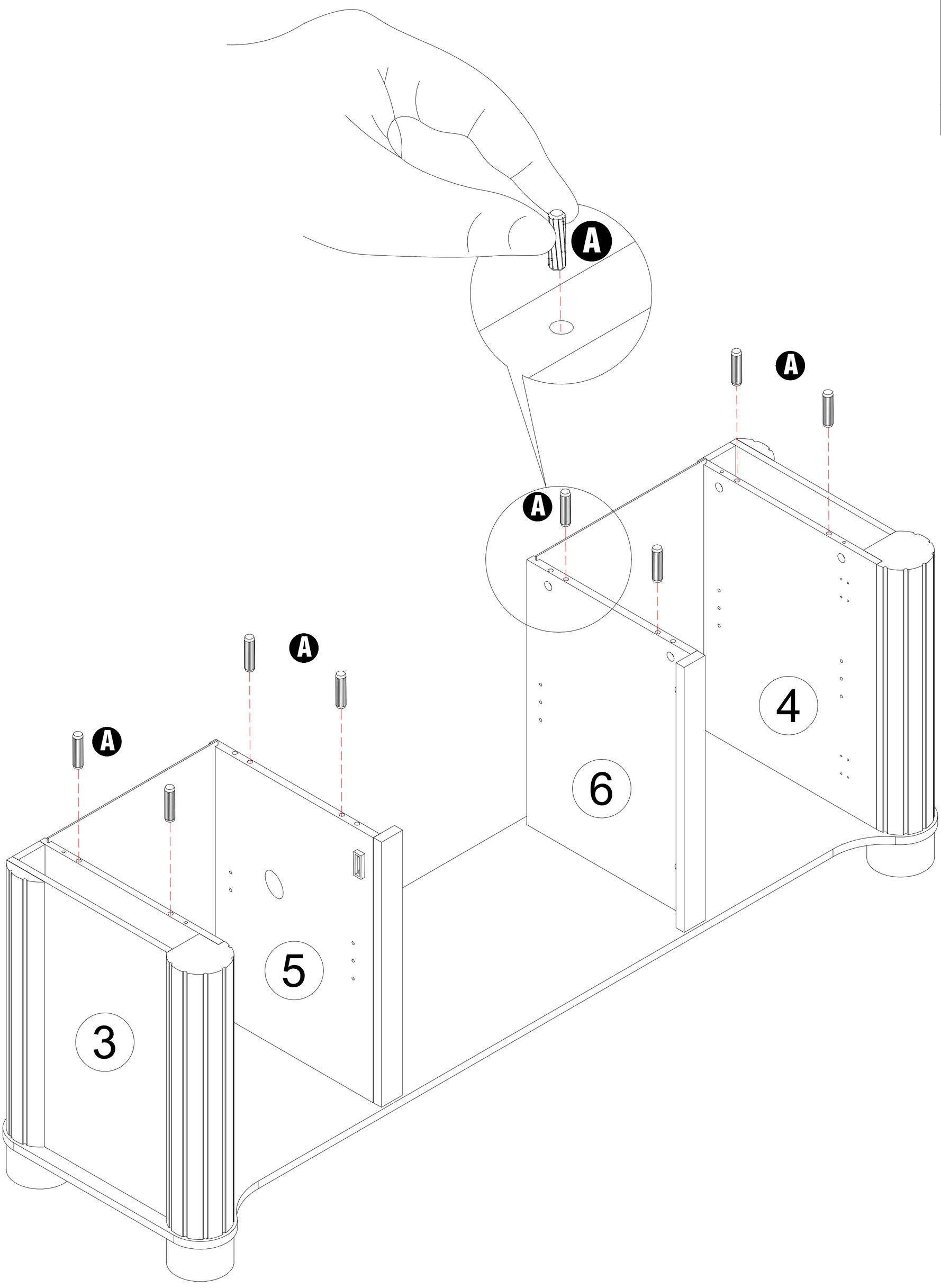

STEP 8

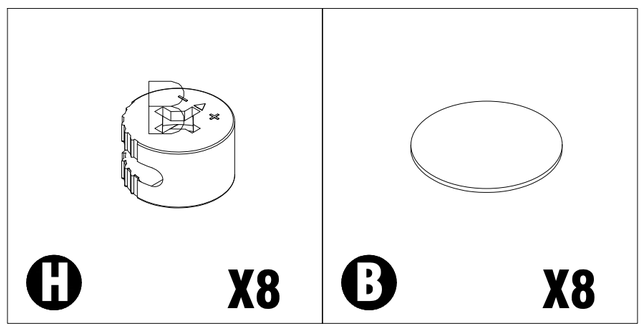

ACTION

- With one adult at each end, align top panel 1 with all dowels and cam bolts, then lower it straight down.
- Insert the eight cam locks D from inside the cabinet with each arrow facing its bolt. Tighten only after the top is fully seated.
- Press caps B into the cam-lock holes after every joint is secure.

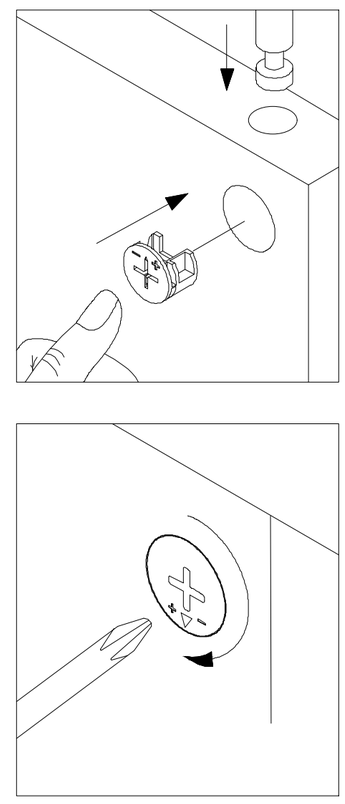

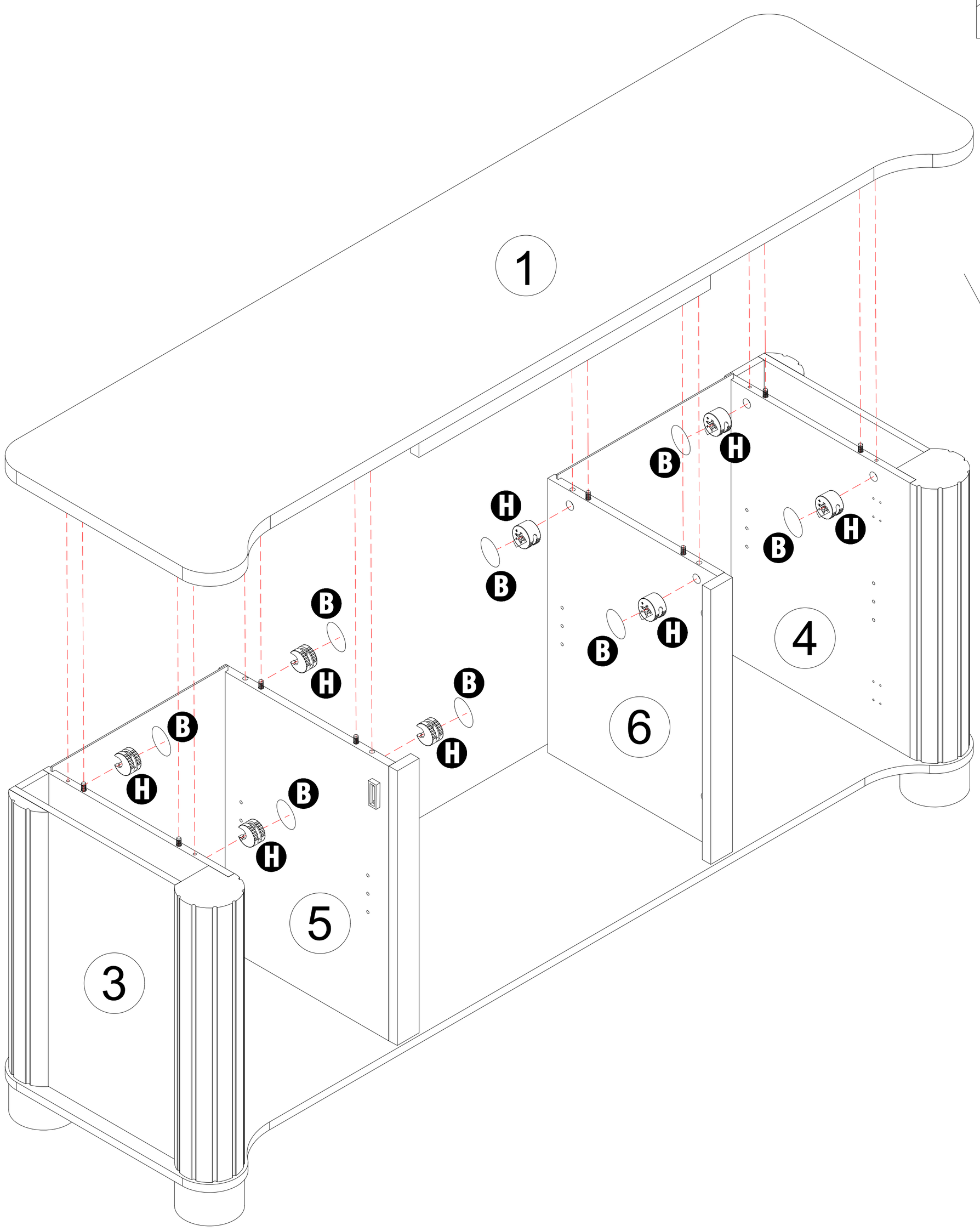

STEP 9

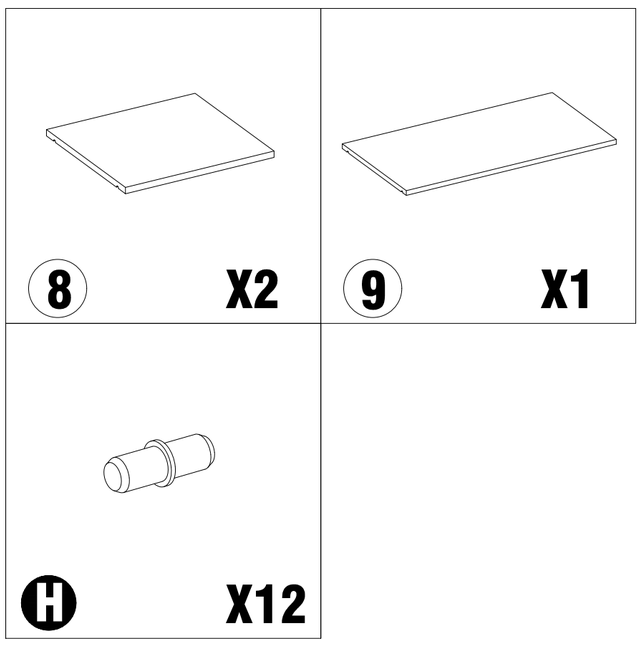

ACTION

- Insert the twelve shelf supports H at matching heights, with four supports for each shelf position.
- Slide shelves 8 into the side compartments and shelf 9 into the center compartment with the finished edges facing forward.
- Confirm every shelf rests on all four supports and is level.

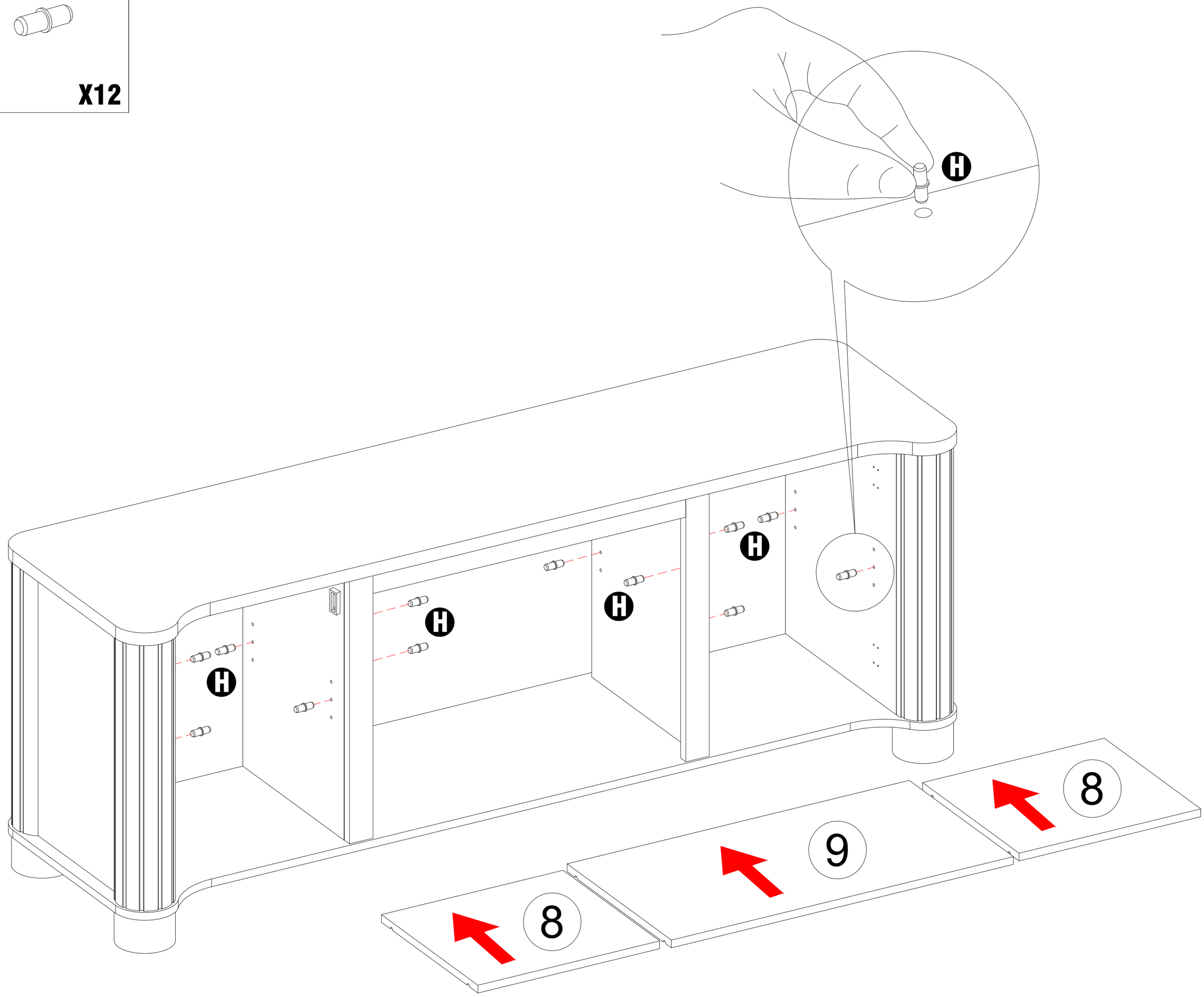

STEP 10

ACTION

- Place doors 15 and 16 face down on a padded surface. Attach two hinges J to each door using screws K.
- Fasten one handle F to each door with two screws E.
- Keep the doors as mirror images so both handles will meet at the center.

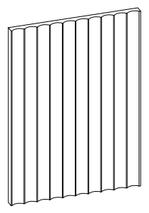 15 X1	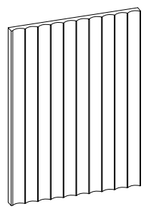 16 X1
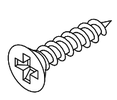 E X4	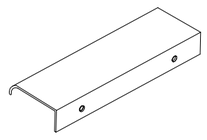 F X2
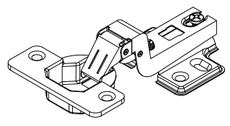 J X4	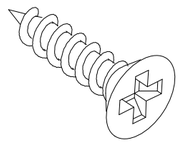 K X8

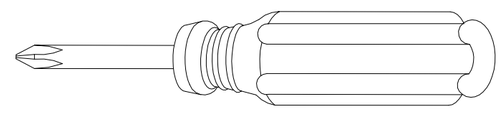

Philips Screwdriver (Not Included)

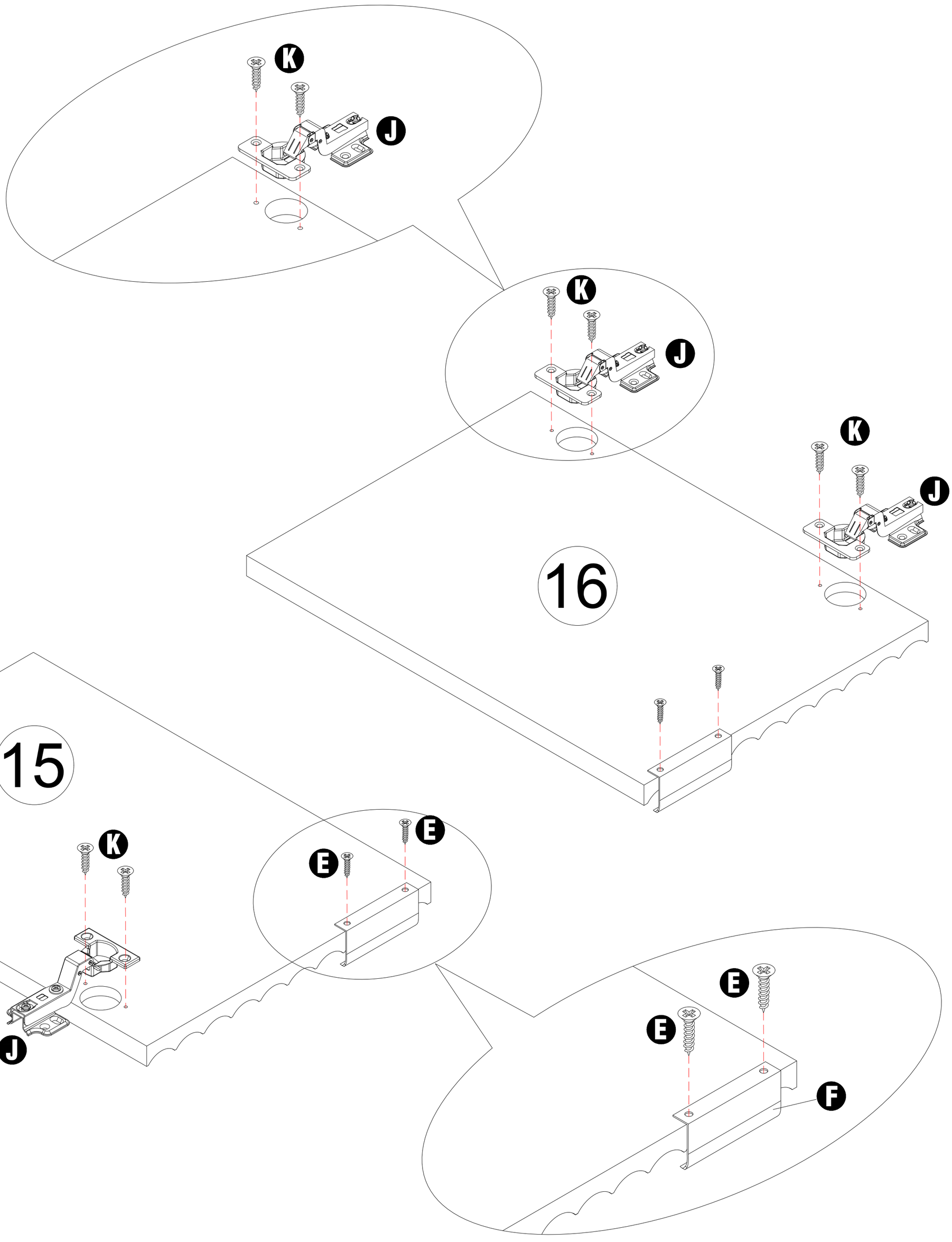

STEP 11

ACTION

- Two adults should support the doors. Start a screw L in each elongated hinge slot first to set the door height, then install the remaining screws.
- Close the doors and adjust the hinge screws in small increments for even gaps and flush fronts.
- Tighten all hinge screws after the doors are aligned.

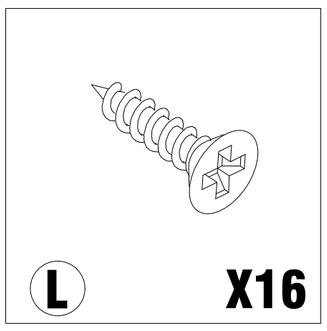

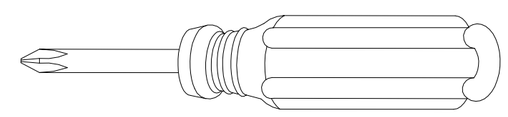

Philips Screwdriver (Not Included)

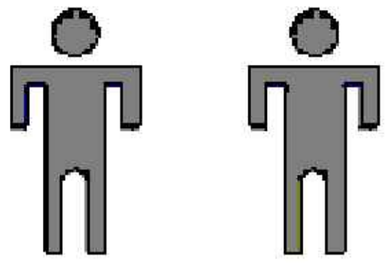

2 people for assembly

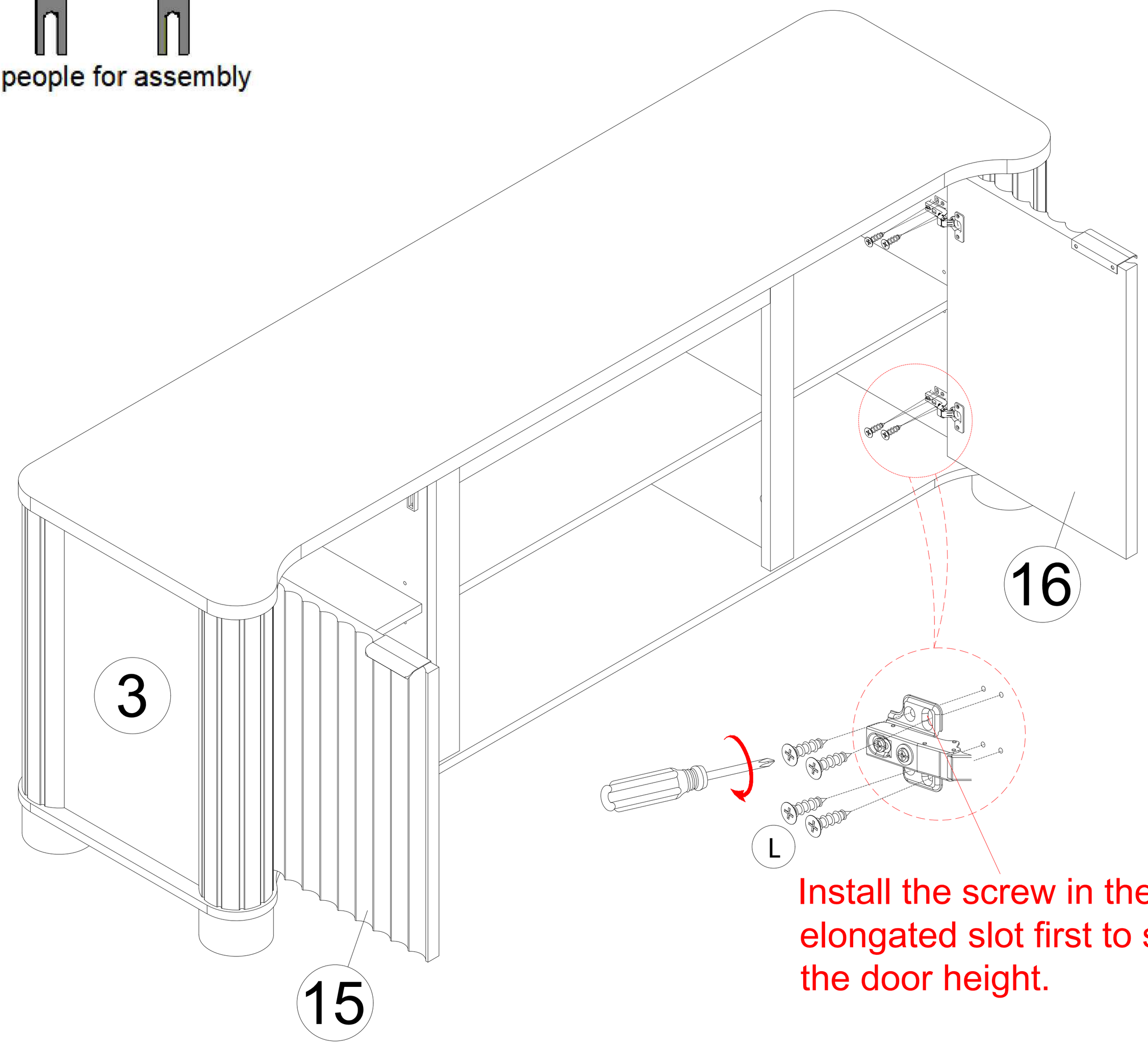

HOW TO ADJUST THE CONCEALED DOOR HINGES

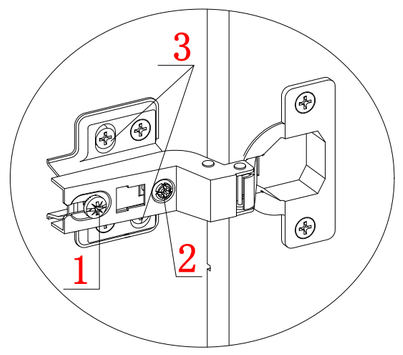

Shipping can cause minor door misalignment. Use the screws shown to make small adjustments:

1. Move the door forward or backward.

2. Move the door left or right.

STEP 12

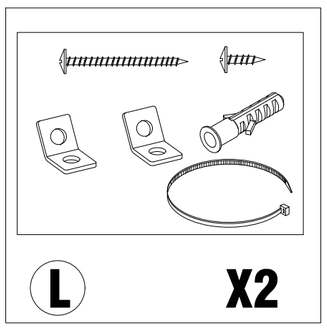

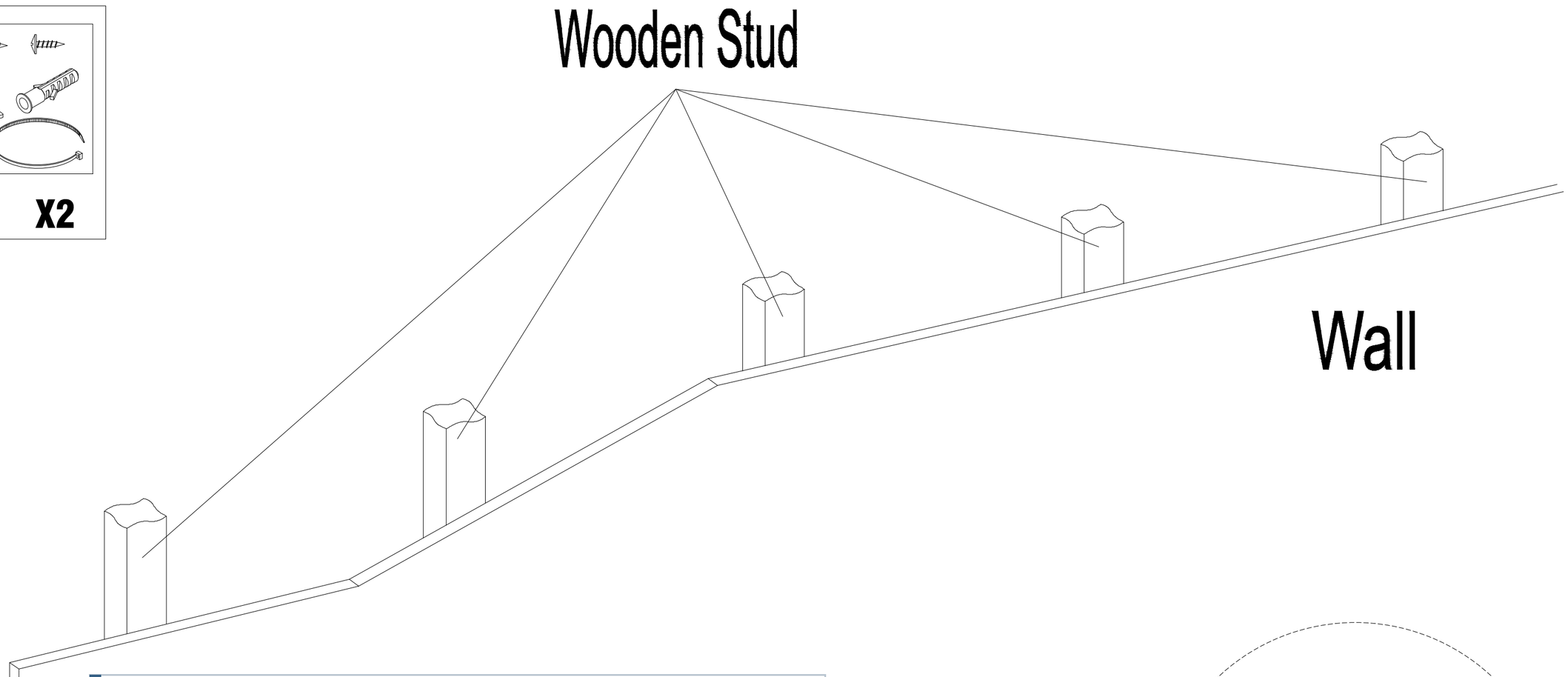

ACTION

- Move the cabinet close to its final position and locate two solid wood studs.
- Fasten the wall brackets to the studs and the cabinet brackets to the two reserved holes in top panel 1.
- Check for wiring, plumbing, and gas lines before drilling; then connect and tighten both restraints.

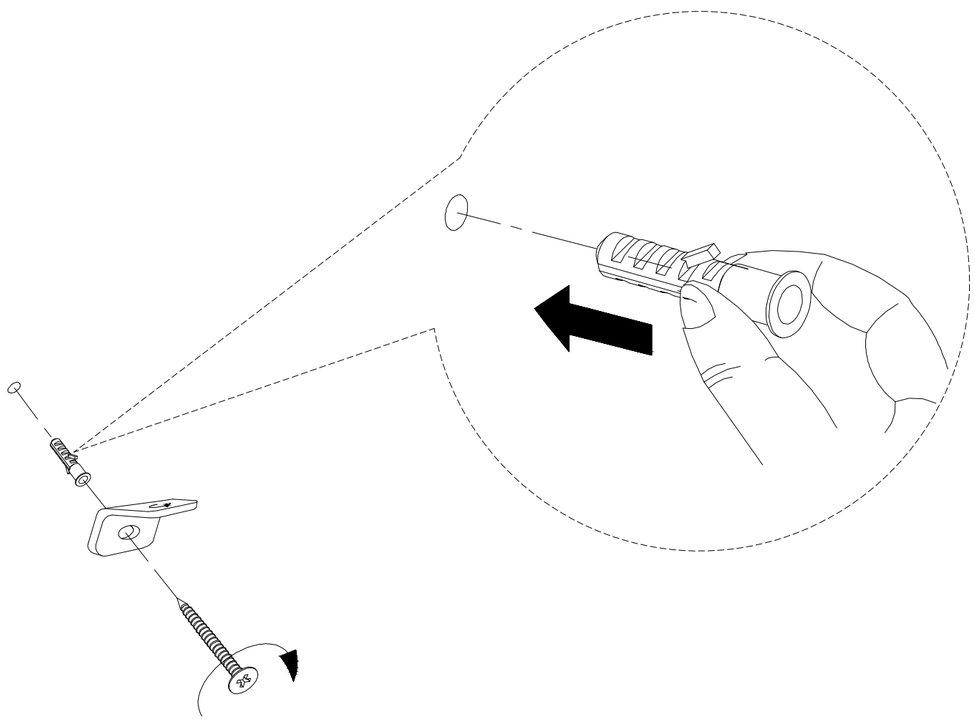

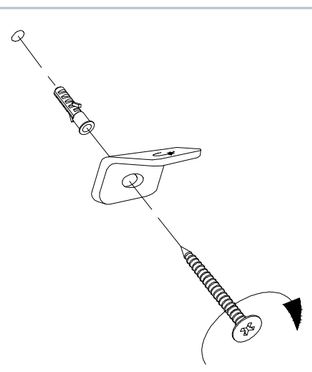

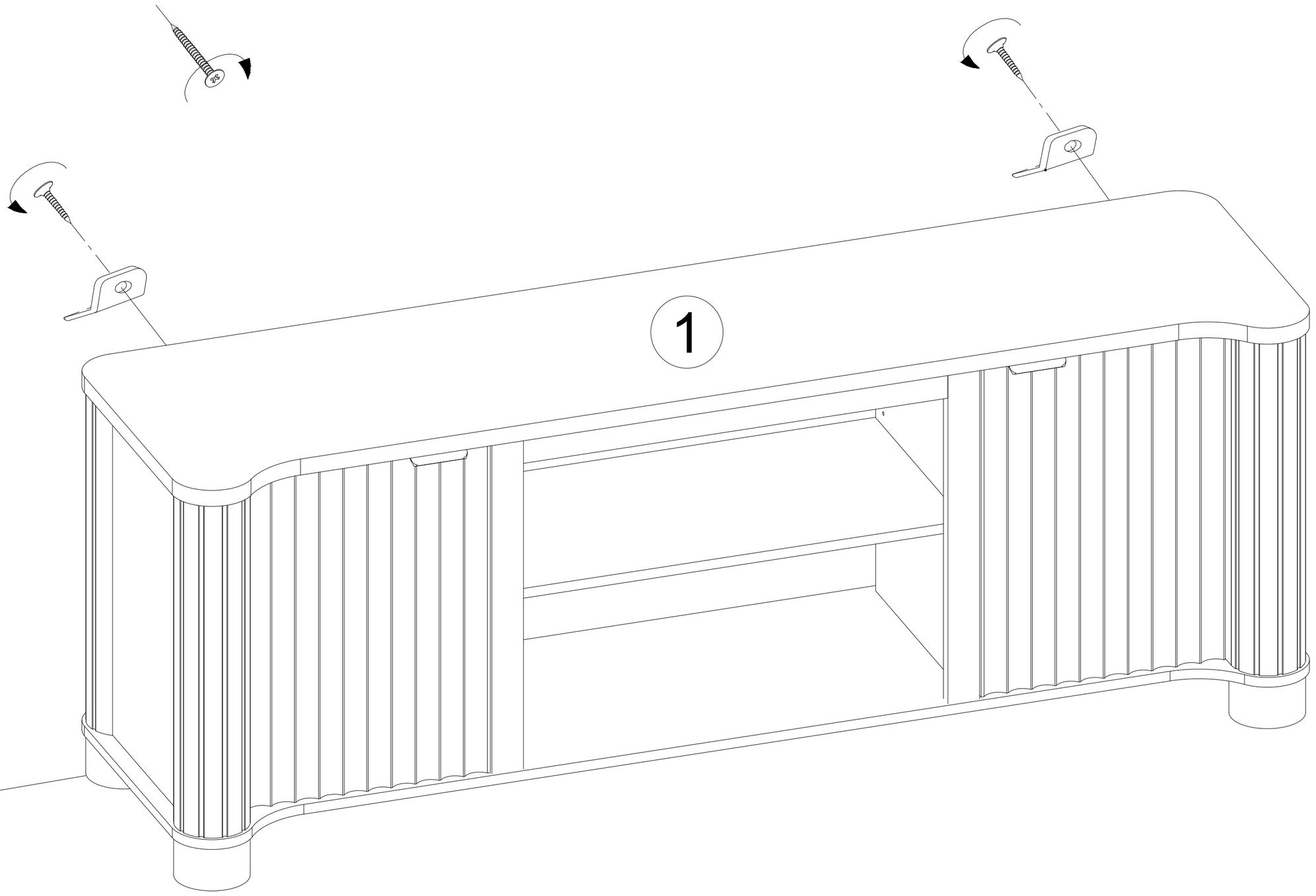

STEP 13

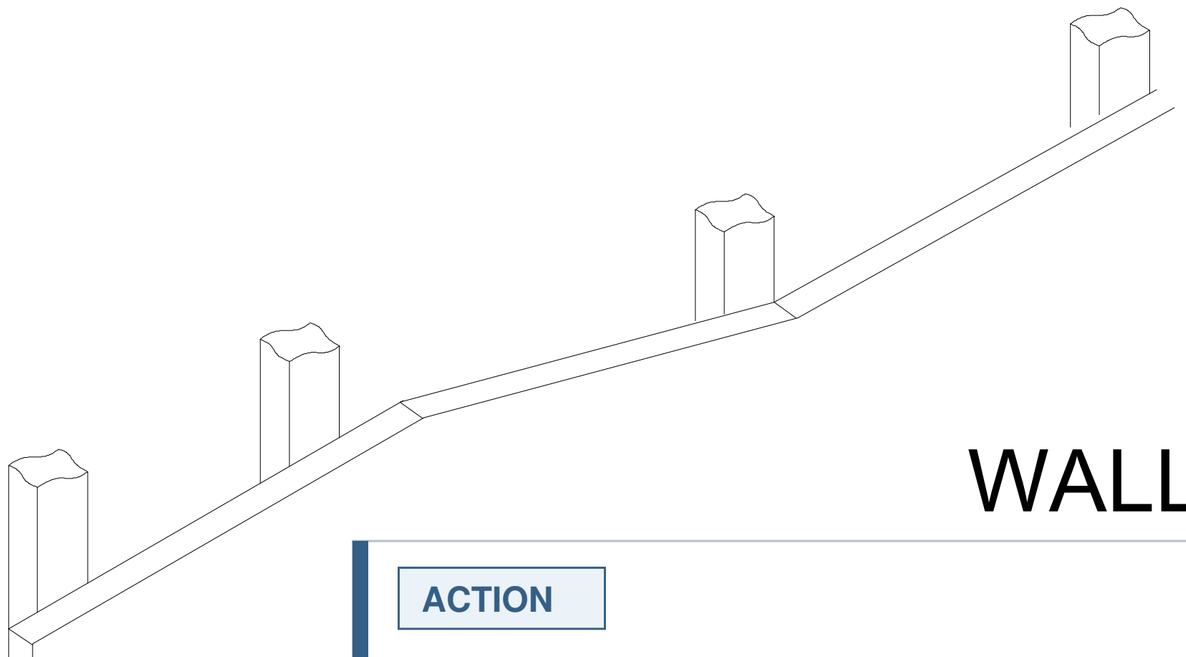

WALL

ACTION

- Set the cabinet upright in its final location.
- Turn the adjustable levelers until all feet contact the floor and the top is level from side to side and front to back.
- Recheck the anti-tip restraints after leveling.

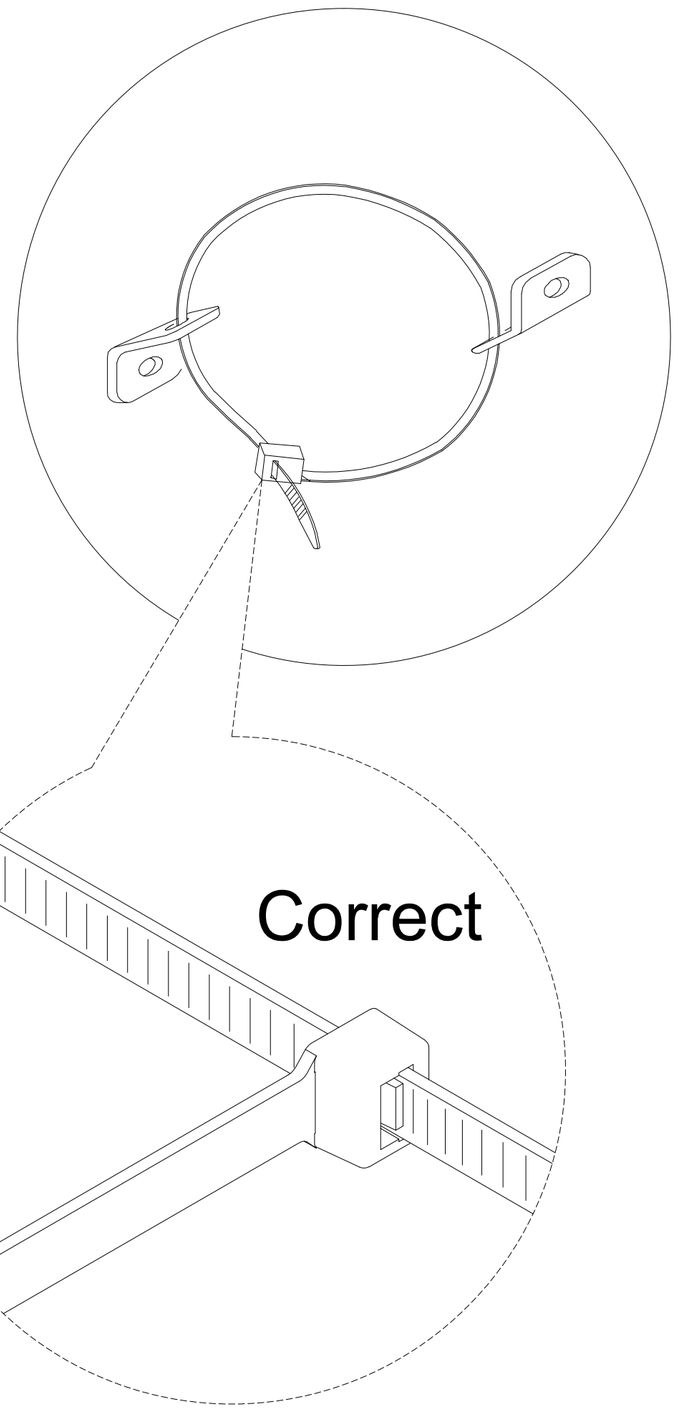

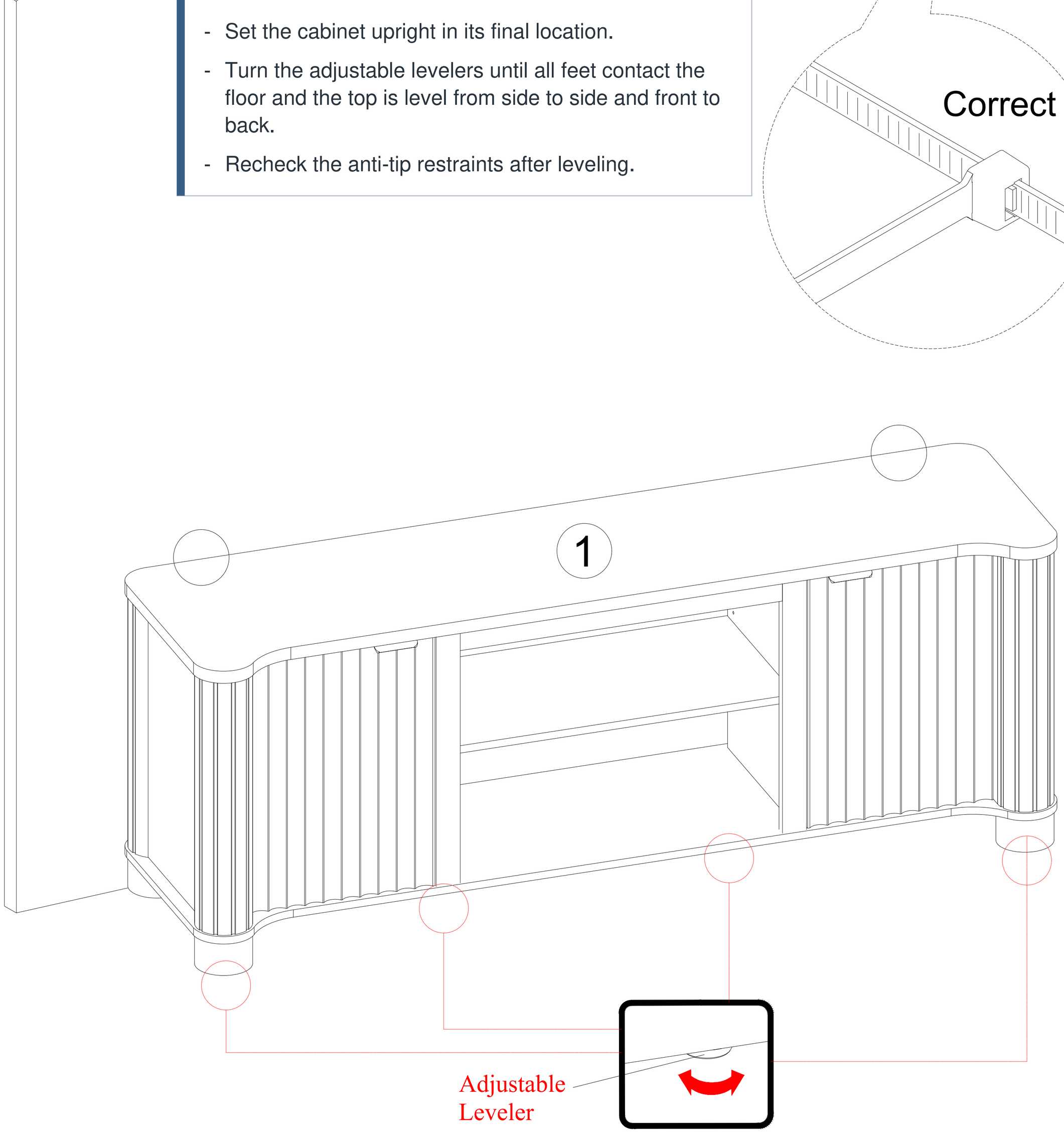

STEP 14

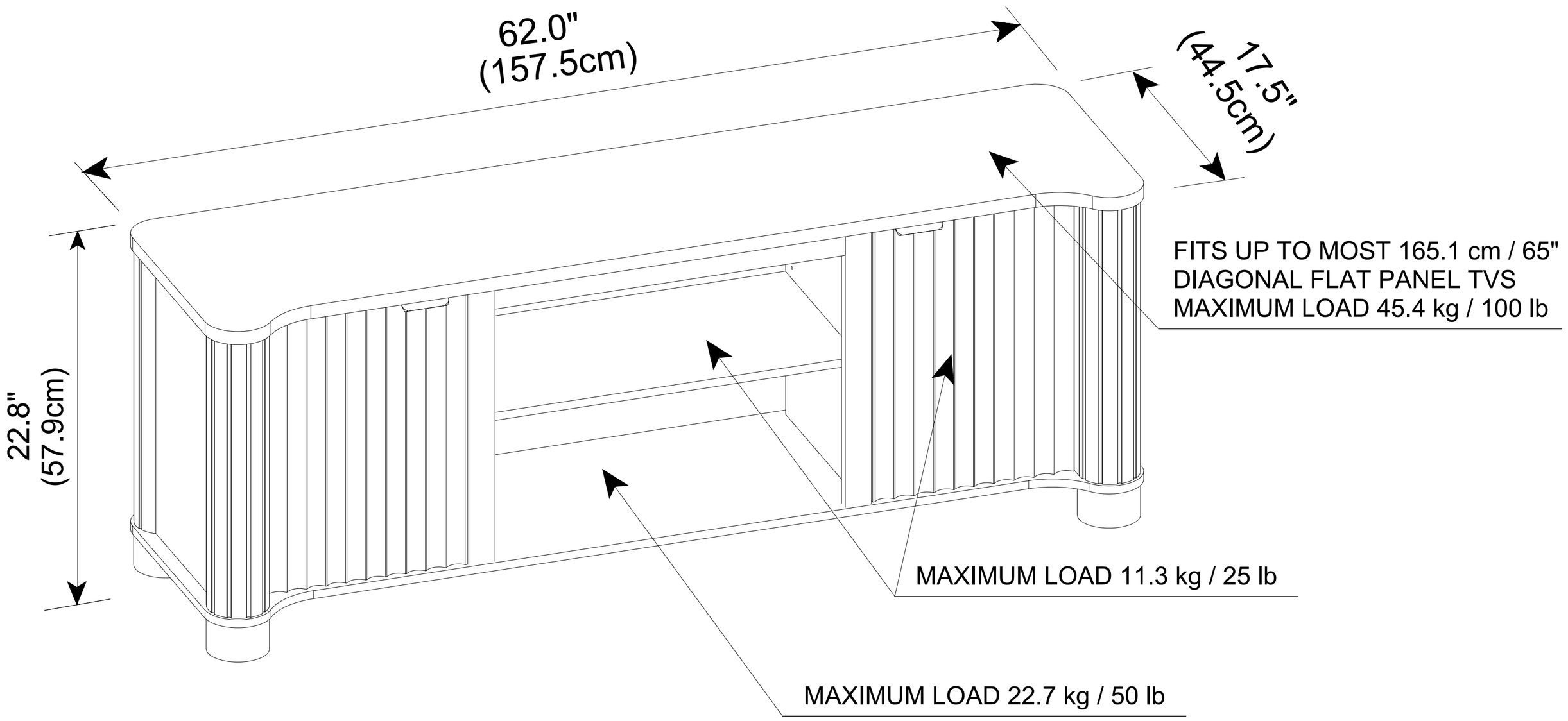

Note: The installation of the TV cabinet is now complete; if you also need to install a built-in fireplace, please continue reading below.

SPECIFICATIONS

ASSEMBLED DIMENSIONS(W x D x H)	62.0 x 17.5 x 22.8 in 157.5 x 44.5 x 57.9 cm
MAXIMUM TOP LOAD	100 lb (45.4 kg)

STEP 15

OPTION 2: ELECTRIC FIREPLACE INSERT

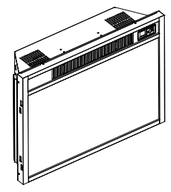

X1

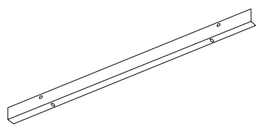

X1

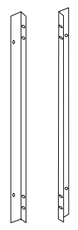

X1

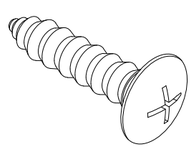

X6

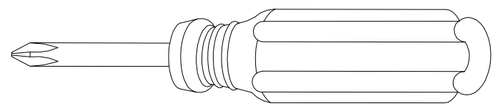

Philips Screwdriver (Not Included)

ACTION

- Keep the fireplace insert unplugged. Attach the top trim and both side brackets with the six screws supplied with the insert.
- Keep the trim centered and flush, and do not block any ventilation openings.

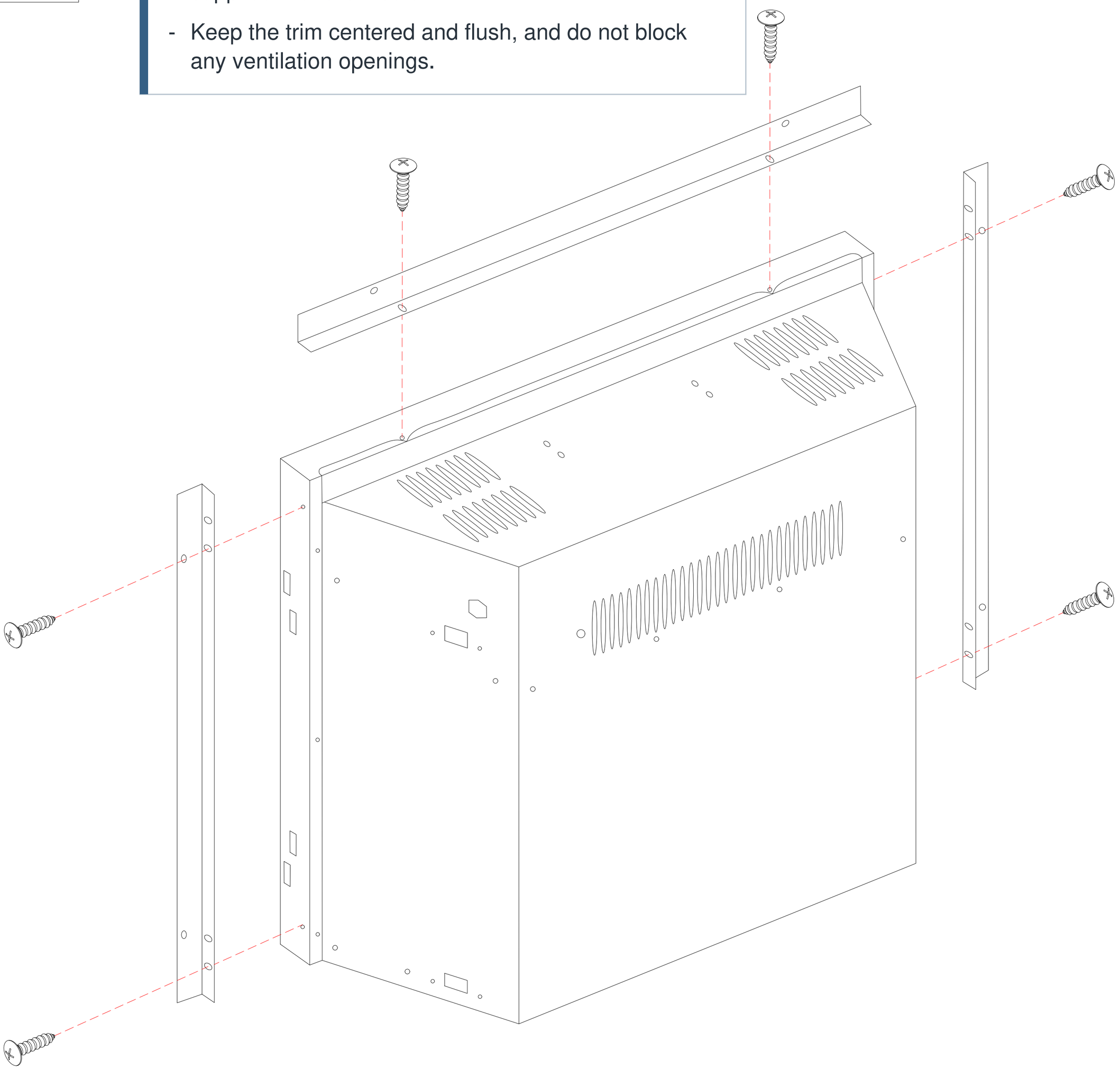

STEP 16

OPTION 2: ELECTRIC FIREPLACE INSERT

ACTION

- From the back of the cabinet, lift and remove adjustable shelf 9 from the center compartment.
- Store the shelf and supports for future use, and clear the entire insert opening.

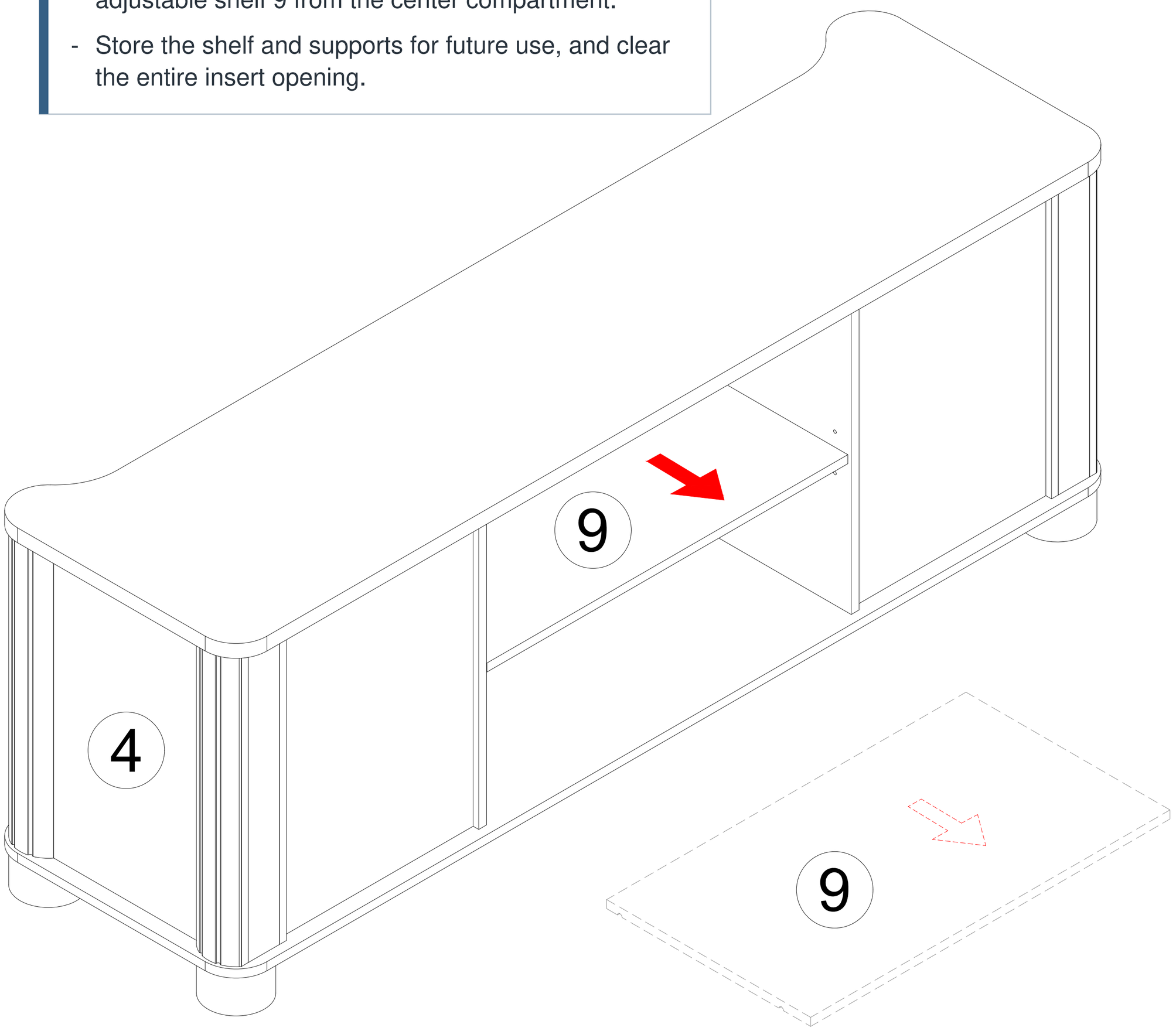

BACK SIDE

Remove the middle adjustable shelf (9).

STEP 17

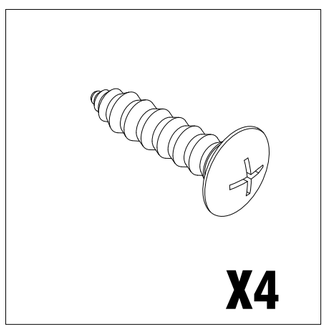

ACTION

- With a helper, tilt the unplugged heater into the rear opening and rest it on bottom panel 2.
- Push it forward gently until the front trim is centered and flush.
- Secure the insert with the four wood screws shown. Do not reconnect power until the insert is stable.

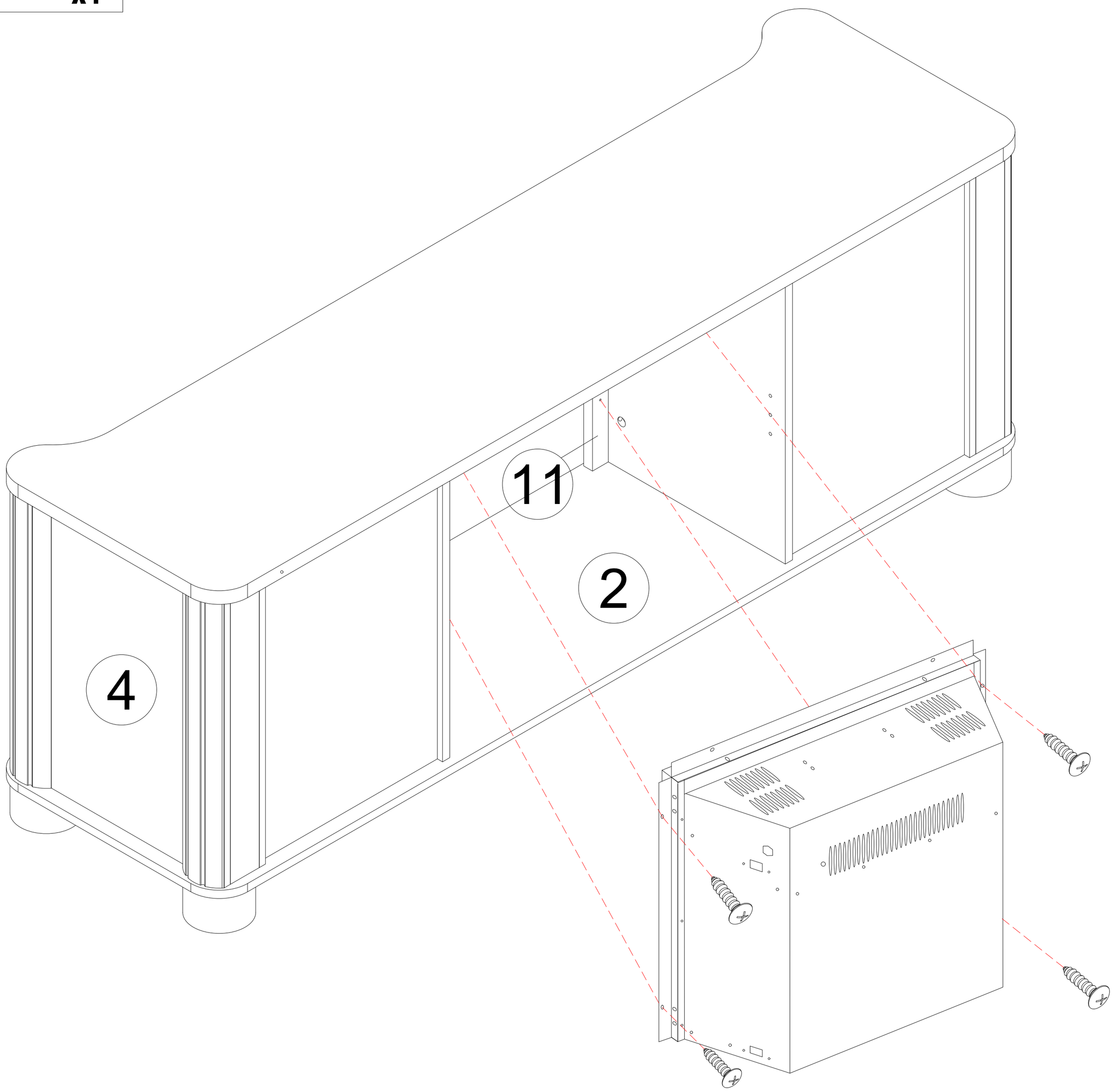

BACK SIDE

Tilt the heater insert and rest it on Bottom Panel (2). Gently push it into position, then secure it with the four wood screws shown.