ASSEMBLY INSTRUCTION

This instruction booklet contains important safety information.
please read and keep for future reference.

This sofa collection work as modular sofa function,it can be a single sofa ,2 seater sofas,3 seater sofas,4 seater sofas,L shape sofas, ottoman,sofa sets with buying different sections of the sofas and combine them together.
You can decide to buy more components according to your living room size.

To ensure safe and satisfactory use of this product,please carefully read the below instructions beforehand.

1.This sofa ships in several boxes,we recommend unpacking and starting assembly only after all cartons have been delivered.
2.Our cushions are vacuum packed for convenient shipping. Please allow 2-3 days for them to fully expand to their original shape and for any wrinkles to disappear.
3.In the event that a part is damaged or missing,no need to return the product,we will gladly help and ship your replacement parts free of charge.

Below are some guidelines for you how you can do combination&assembly.

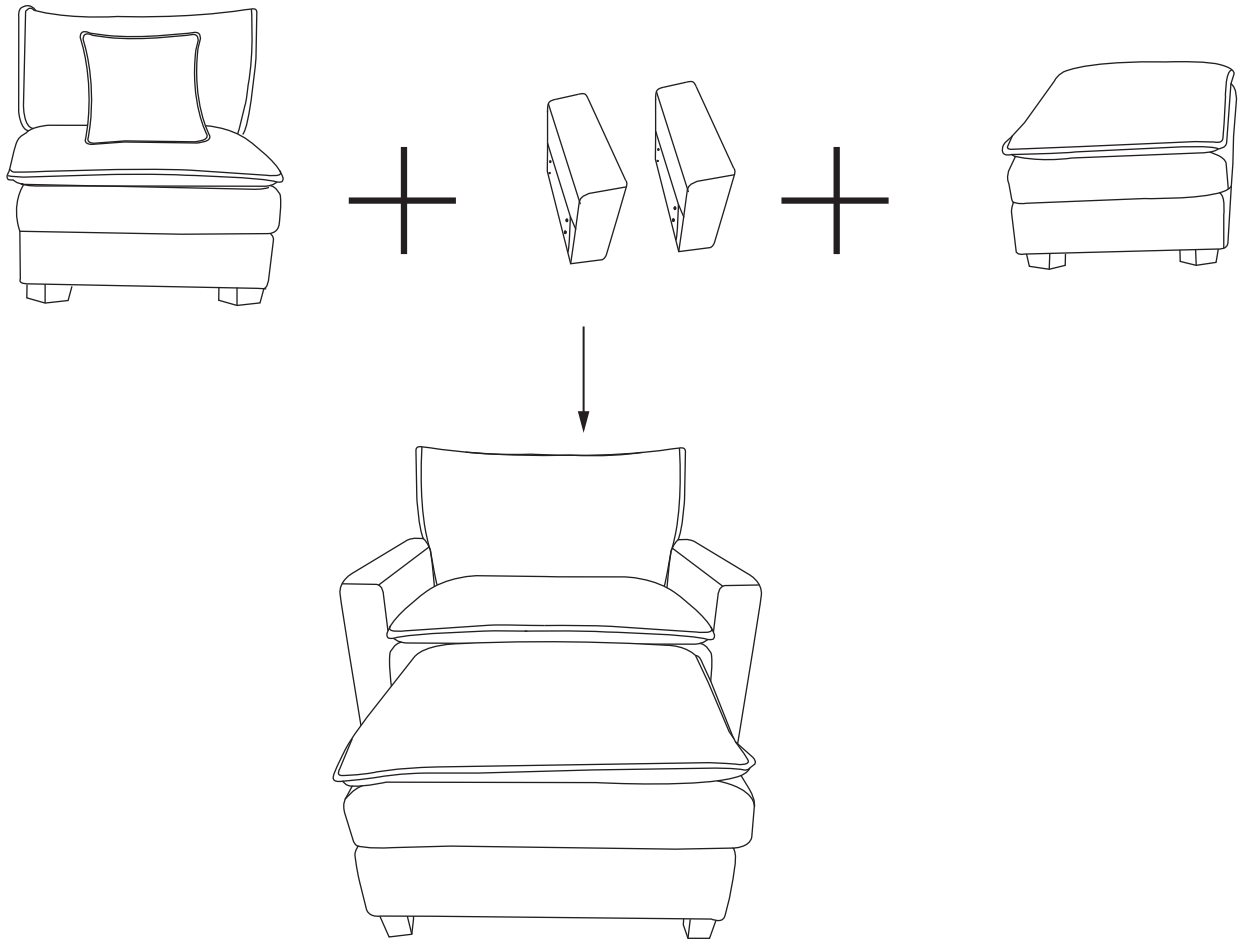

If you have any questions, please contact our professional support team.

We will respond within 24 hours.

WARM REMINDER

Need help with your item?

If your item arrives damaged, has missing parts, is difficult to assemble or install, or if you have any other concerns, please contact us before starting a return.

- Our support team can help review the issue and provide the best available solution.
- We will do our best to assist you promptly and make the process easier for you.

Thank you for choosing our product. We truly appreciate your trust and support.

We are here to help.

A 5° scientific tilt. This isn't a flaw—it's a clever ergonomic design refined through countless tests.

IF YOU BUY A SINGLE SOFA

please follow below assembly instruction

Parts included

Parts List(BOX F)

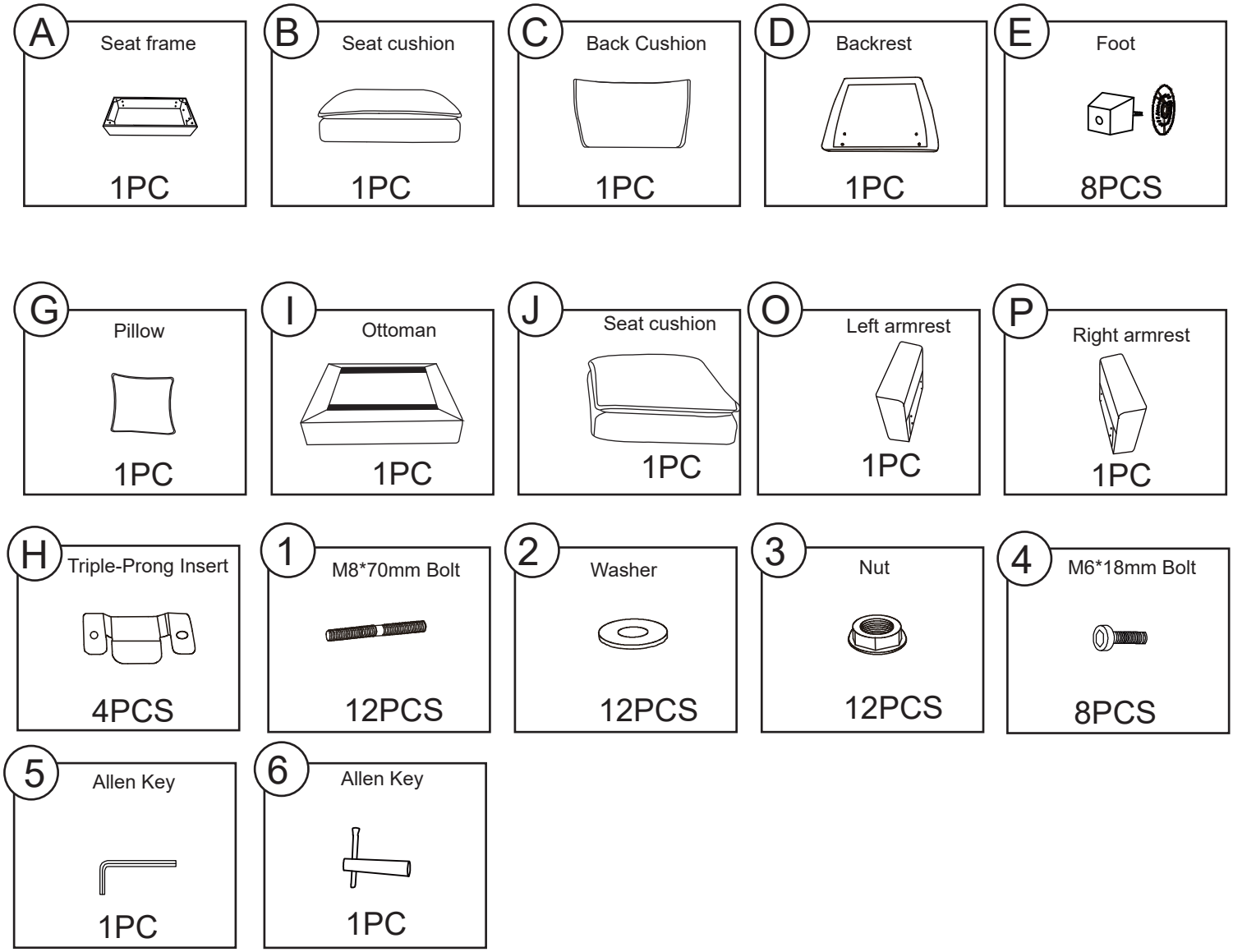

Note: Please retain all boxes until you are certain that your product isn't damaged and that you do not wish to return it. Disposal of boxes may prevent our ability to resolve your request.

ASSEMBLY STEPS

STEP 1:Assemble the Leg (E) to the seat frame (A).

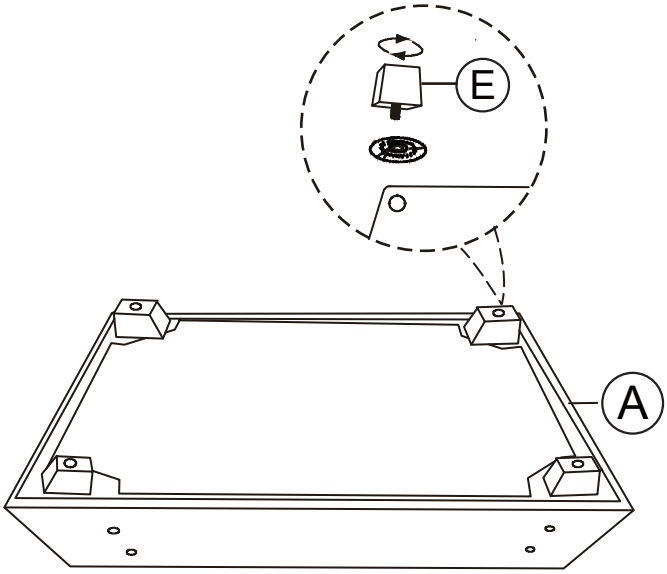

STEP 2:Pre-assemble the Backrest (D) with Bolts (1).

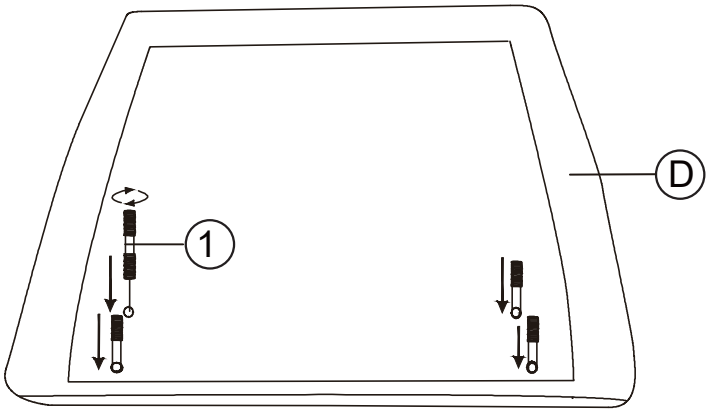

Tighten fully until no thread is exposed.

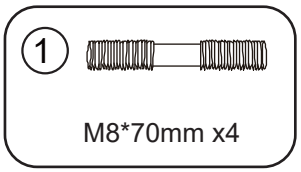

STEP 3:Assemble the Backrest (D) to the seat frame(A) with Bolts (1) and Nuts (3)and Washers (2).

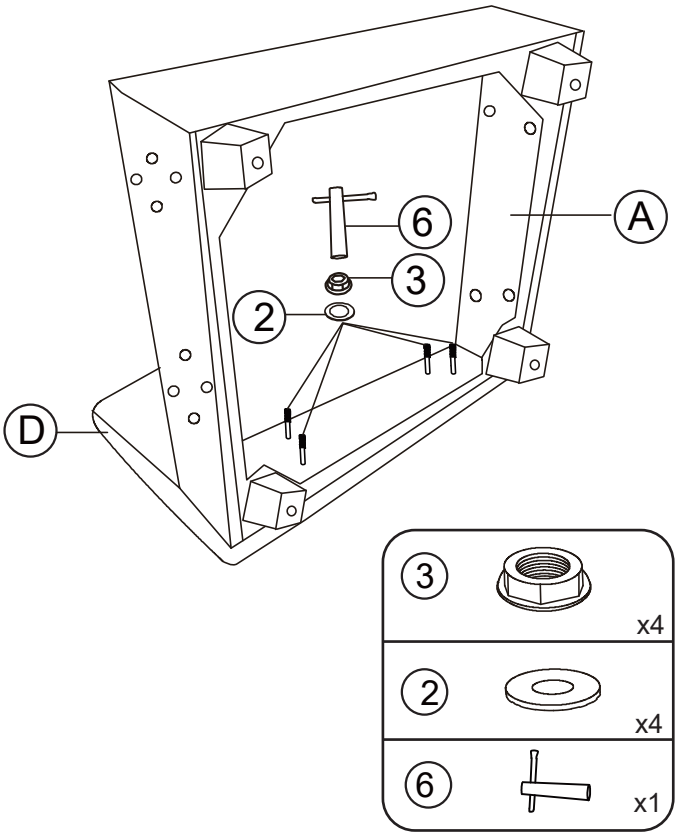

STEP 4:Pre-assemble the Left armrest (O)with Bolts (1).

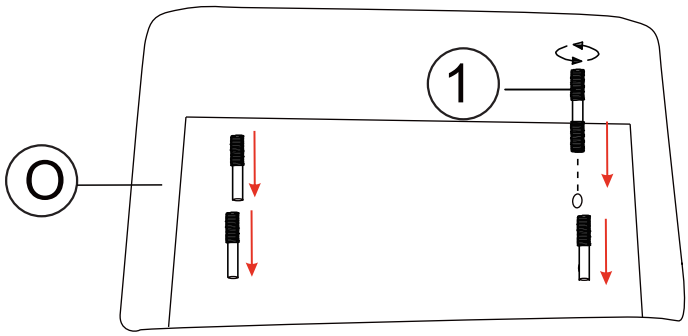

Tighten fully until no thread is exposed.

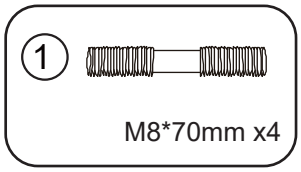

STEP 5:Pre-assemble the Right armrest (P)with Bolts (1).

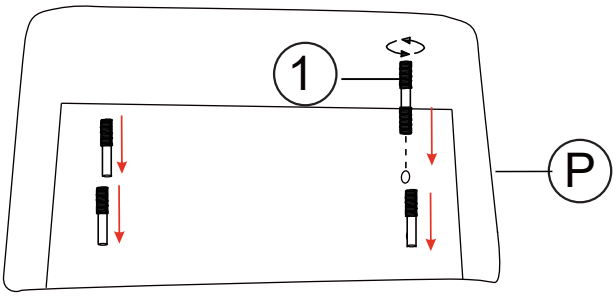

Tighten fully until no thread is exposed.

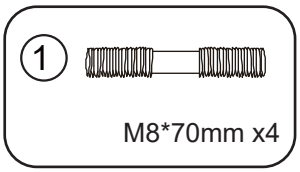

STEP 6:Assemble the Right armrest (P) to the seat frame(A) with Bolts (1) and Nuts (3)and Washers (2).

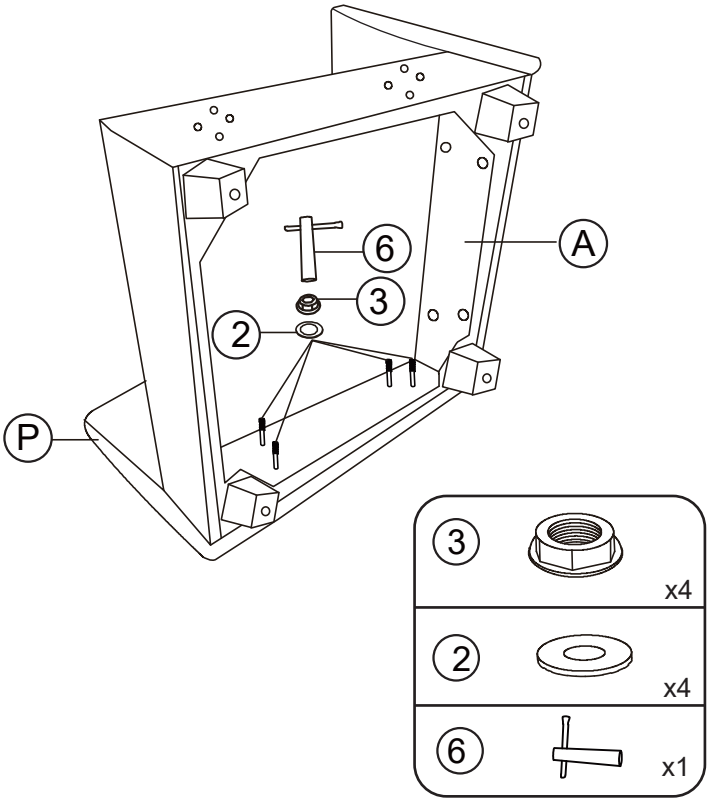

STEP 7:Assemble the Left armrest (P)to the seat frame(A) with Bolts (1) and Nuts (3)and Washers (2).

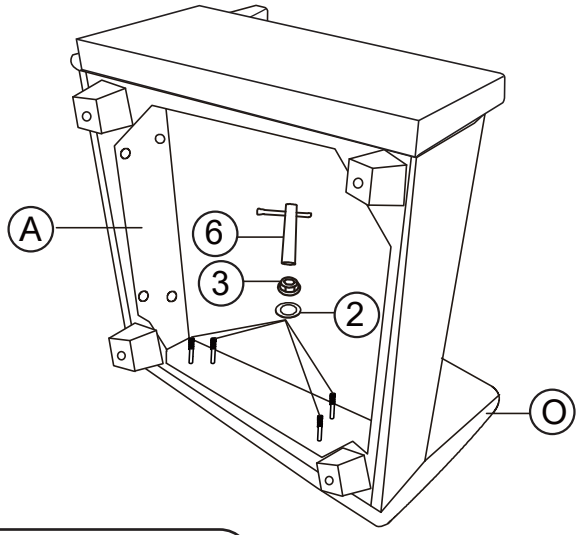

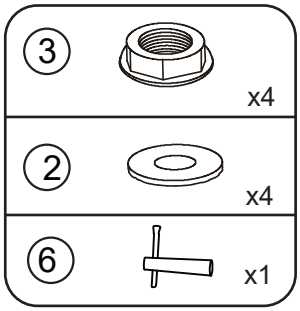

STEP 8:Assemble the Leg (E) to the seat frame (I).

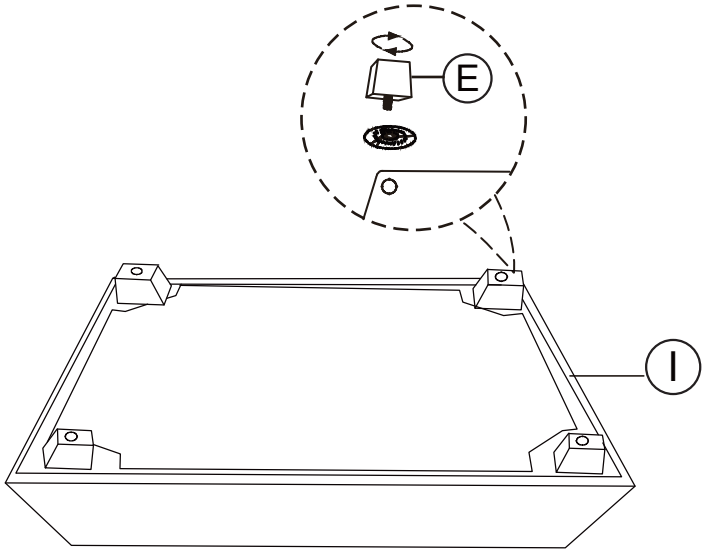

STEP 9: Put Seat cushion (J) to the Ottoman (I).

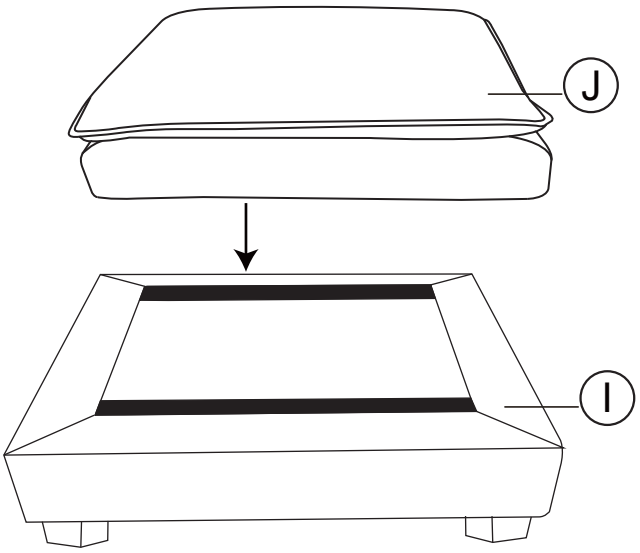

STEP 10:Put the Back cushion (C)and Seat cushion (B) and Pillow (G) to the Sofa.

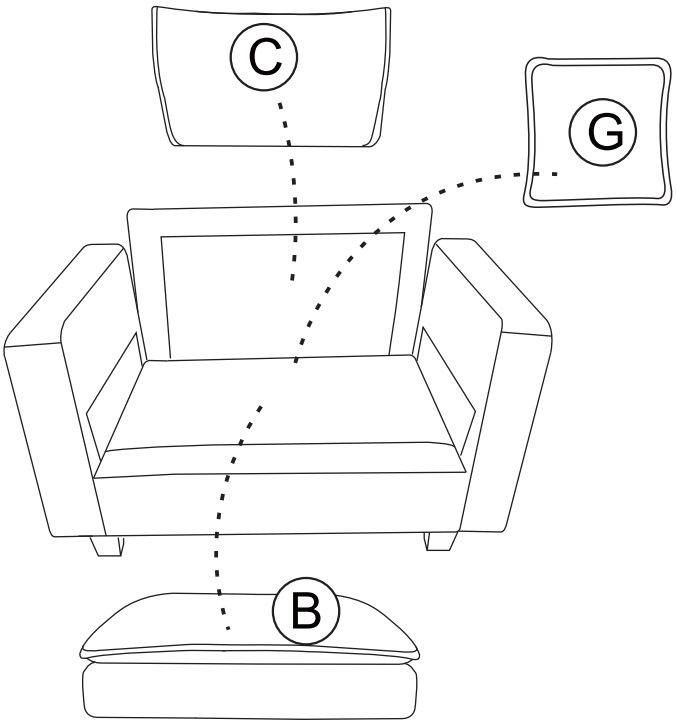

COMPLETED.

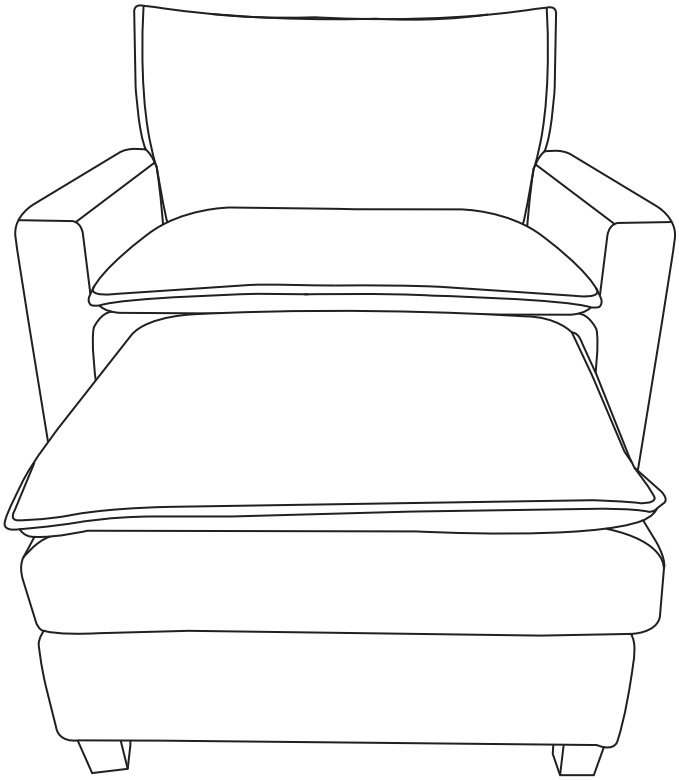

Fixed Seat Mode 1

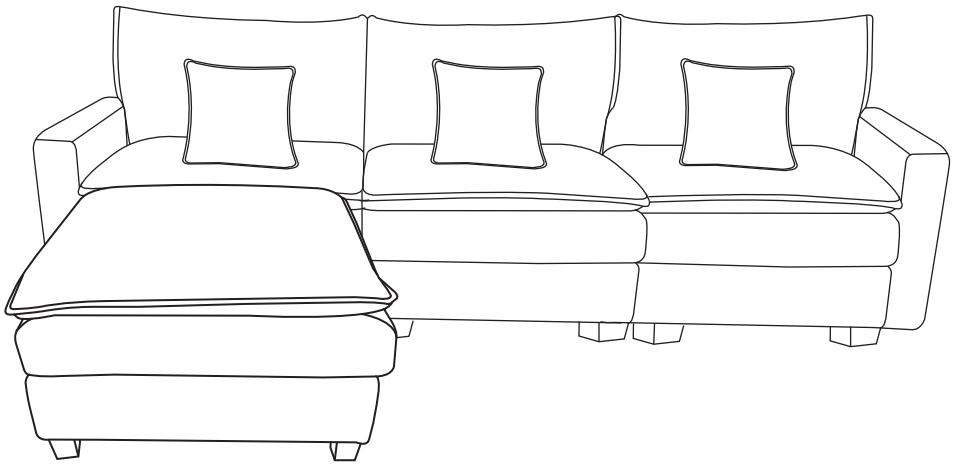

Fixed Seat Mode 2

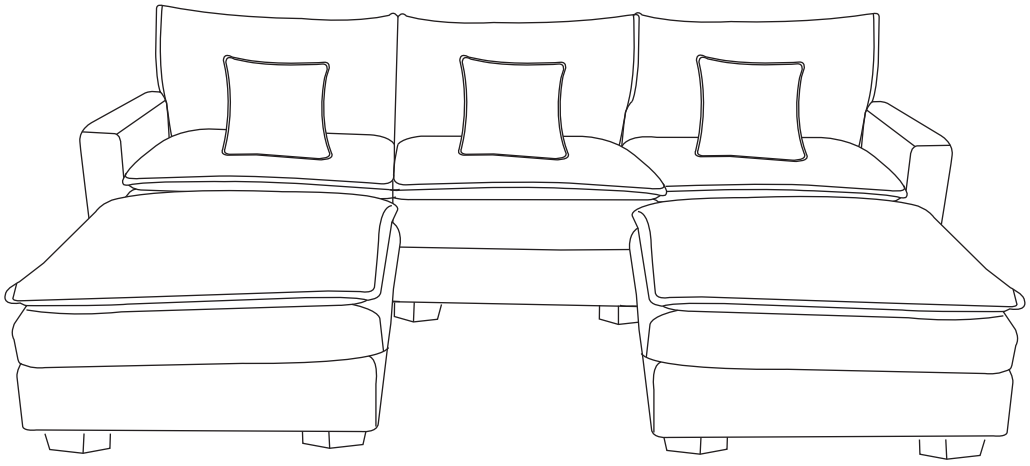

Fixed Seat Mode 3

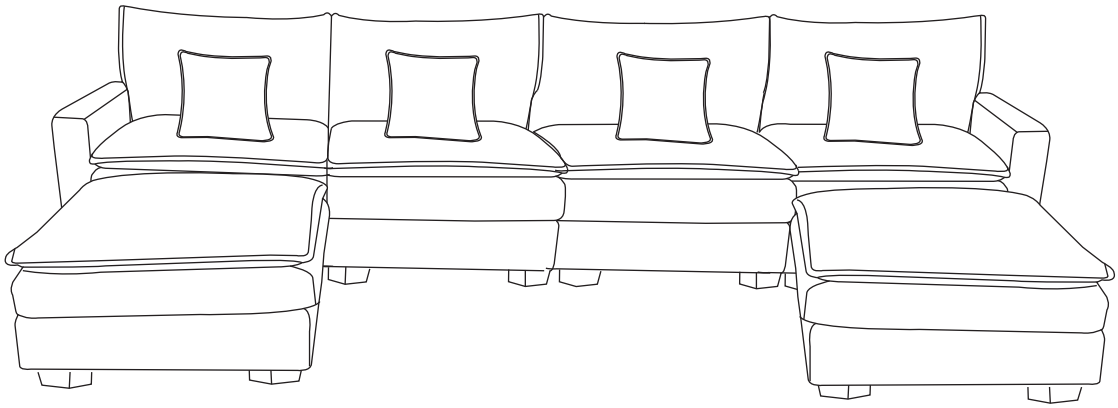

Fixed Seat Mode 4

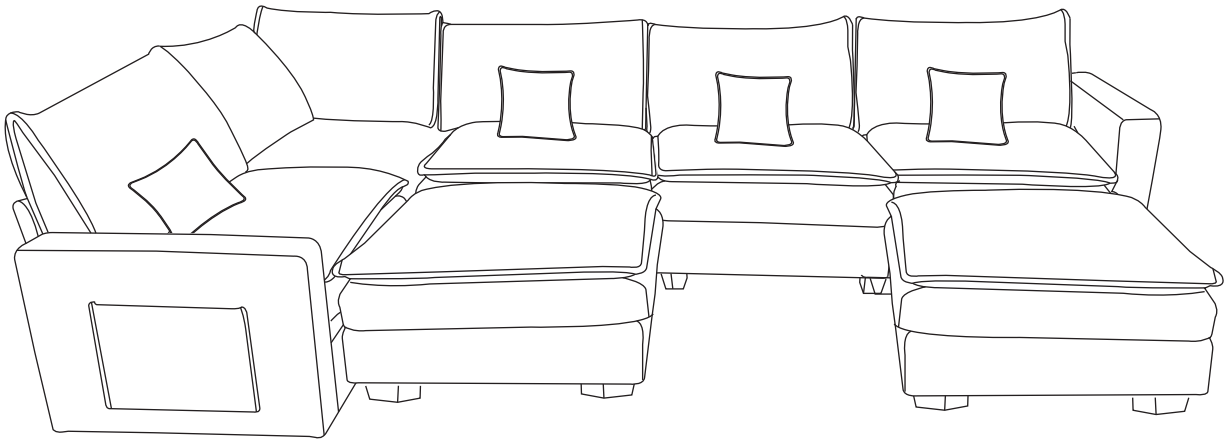

Fixed Seat Mode 5

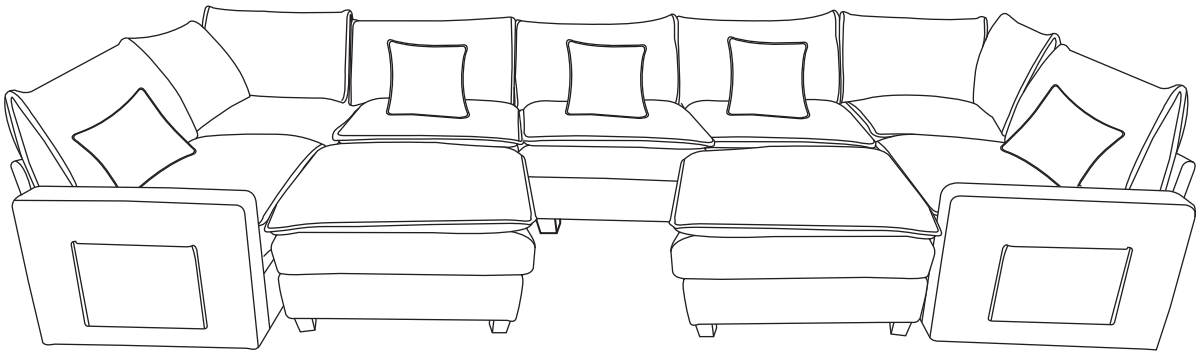
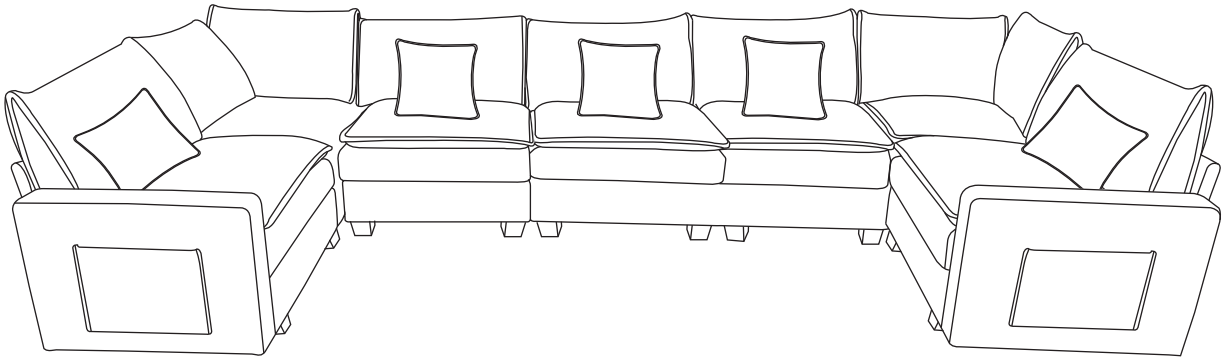
Fixed Seat Mode 6