ASSEMBLY INSTRUCTION

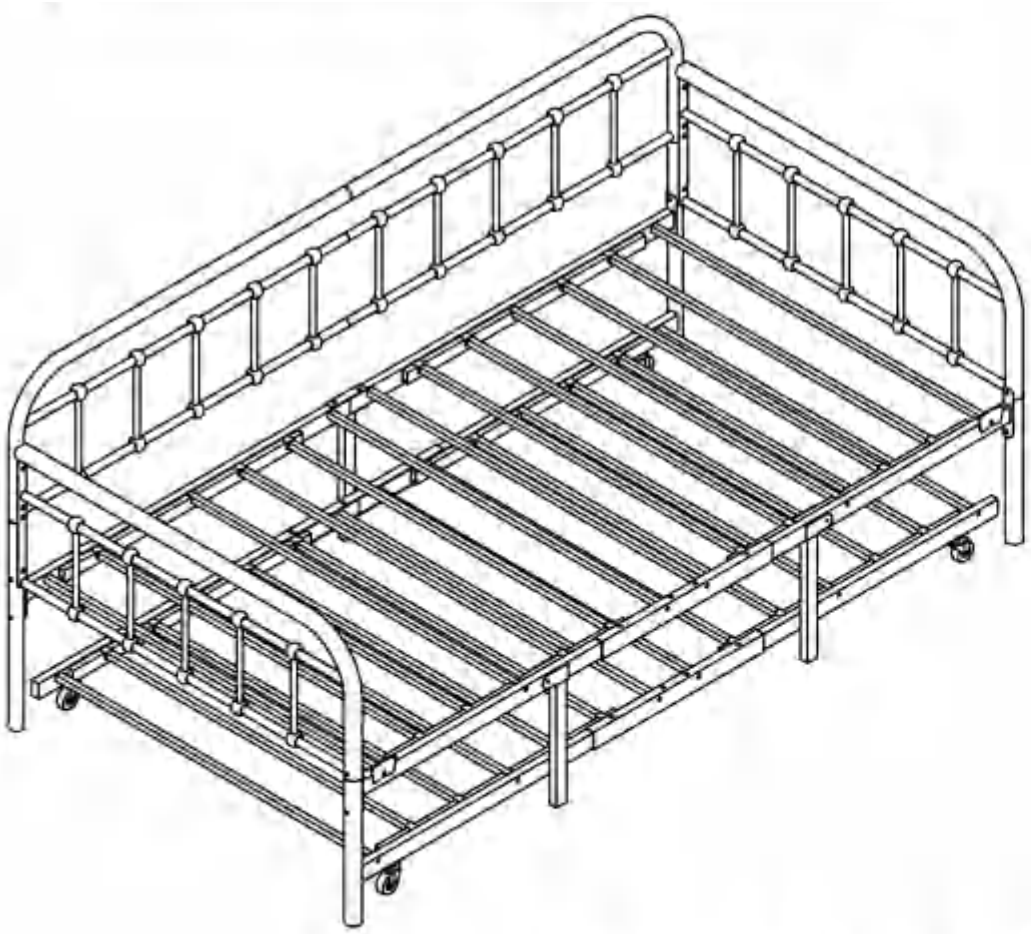

WARRANTY:

We stand behind our products & service with confidence! If parts damaged or mising please feel free to contact us for a FREE REPLACEMENT.
We warranty this product to be free from defects in materials. This waranty covers one year from the date of orginial purchase.

NOTES:
The item is only intended to be used indoors. The product must be assembled and used in accordance with the provisions of the manual.It is recommended that assembly is undertaken by about 2 adults. Please read assembly instructions before assembly and strictly adhere to each step outlined. Estimated assembly time is 30 minutes.

WARNING:
WARNING FOR YOUNG CHILDREN This product contains small components, please ensure that they are kept away from small children while assembling

1 PARTS LIST

A	B	C	D	E	F	G	H	I
					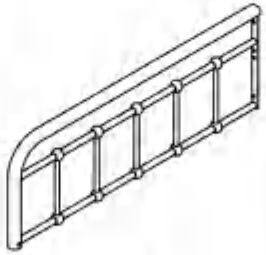	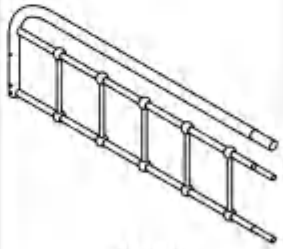	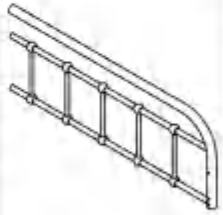	
1PC	1PC	1PC	1PC	1PC	1PC	1PC	1PC	6PCS

J	K	L	M	N	O	P	Q
							
8PCS	6PCS	8PCS	1PC	1PC	1PC	1PC	1PC

R	S	V	Z	a	b	c	f	w	t	g	m	y	x
													
1PC	3PCS	1PC	2PCS	1/4*55 14PCS	1/4*45 12PCS	1/4*32 24PCS	1/4*16 10PCS	26PCS	8PCS	4PCS	1PC	2PCS	2PCS

IMPORTANT:

Please check parts list before you start to assembly.If parts damaged or missing.Contact your seller for a FREE REPLACEMENT.Please provide your order number,a brief message about the issue,and your shipping address. Thank you!

2 NOTE: PLEASE DO NOT TIGHTEN THE BOLTS UNTIL ALL FIXED

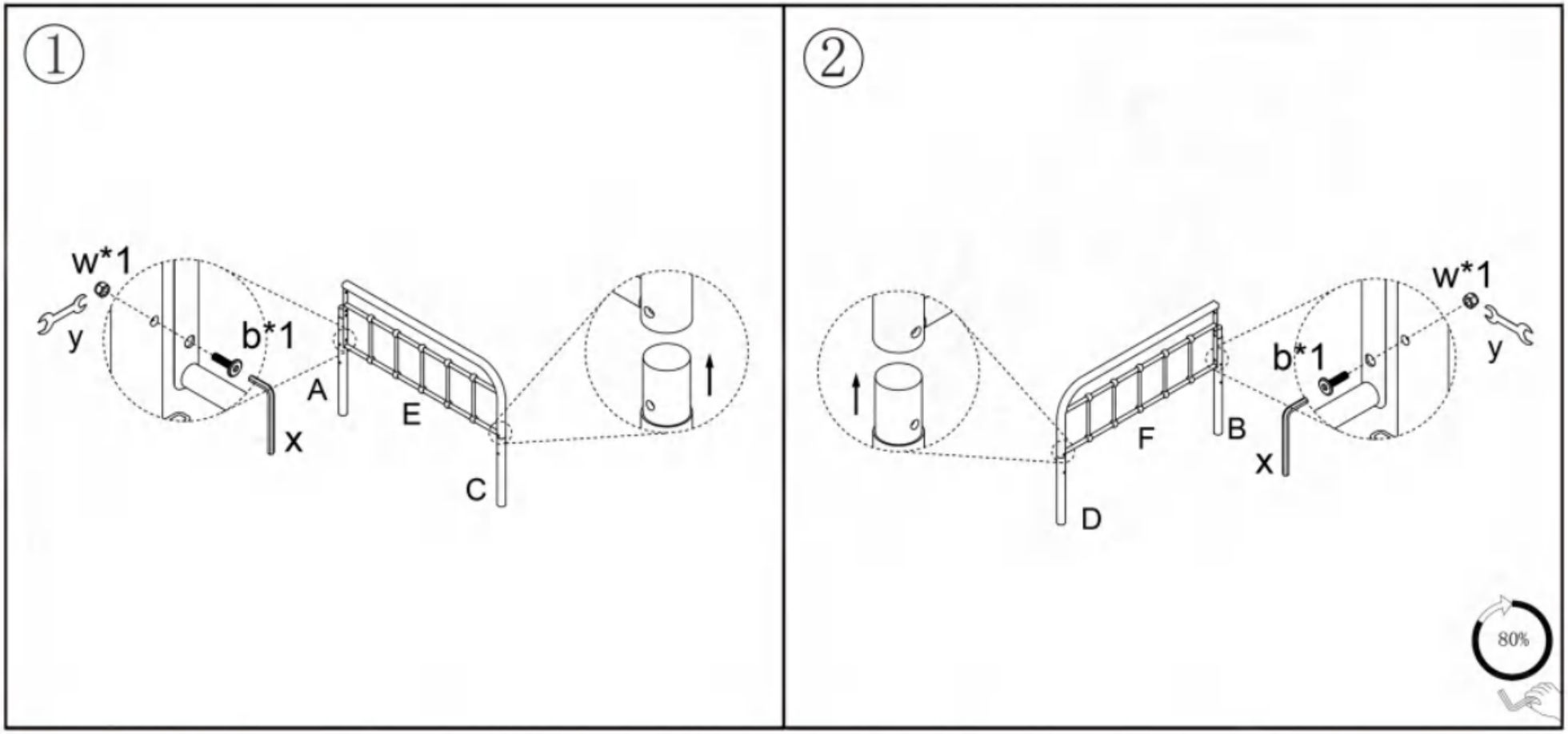

3 NOTE: PLEASE DO NOT TIGHTEN THE BOLTS UNTIL ALL FIXED

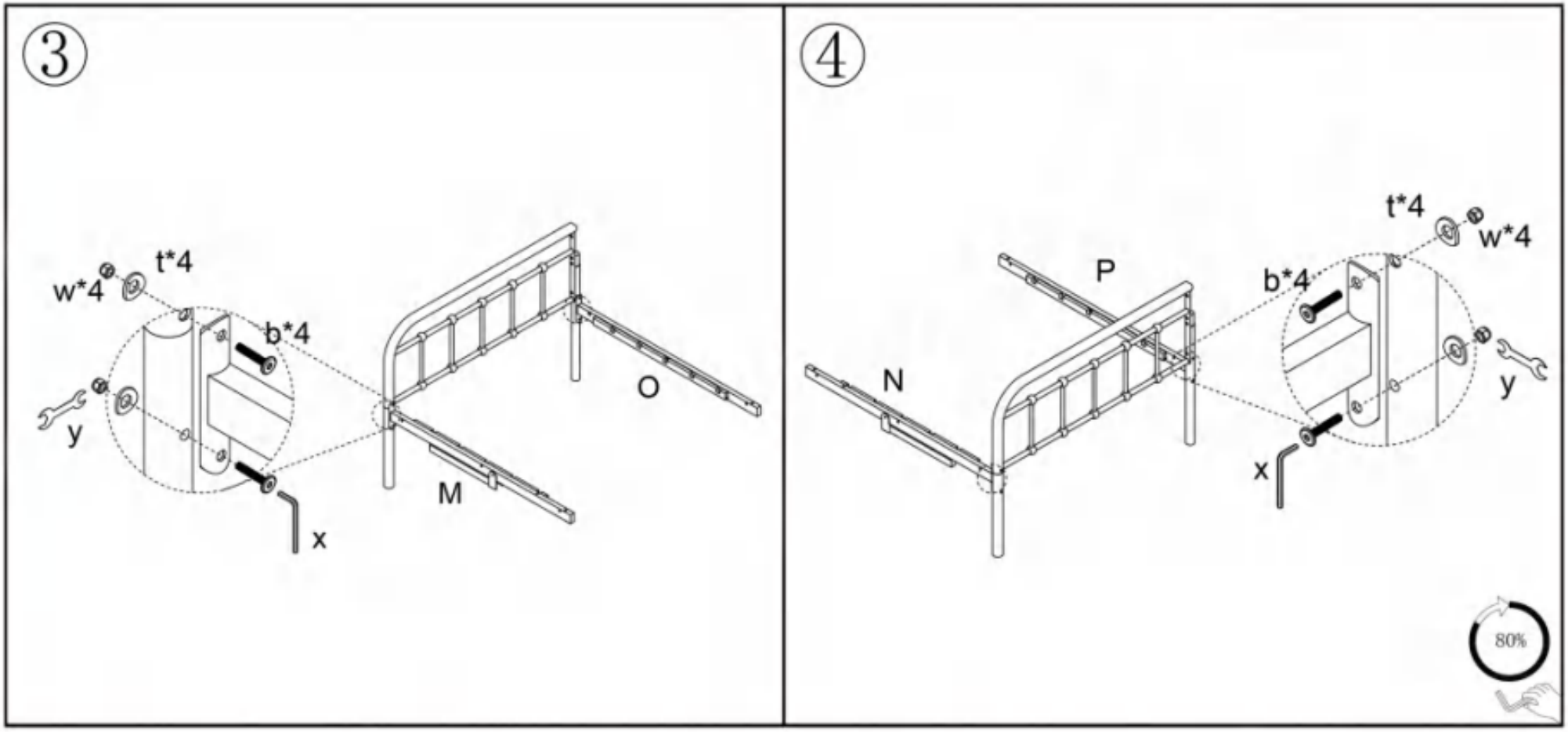

4 NOTE: PLEASE DO NOT TIGHTEN THE BOLTS UNTIL ALL FIXED

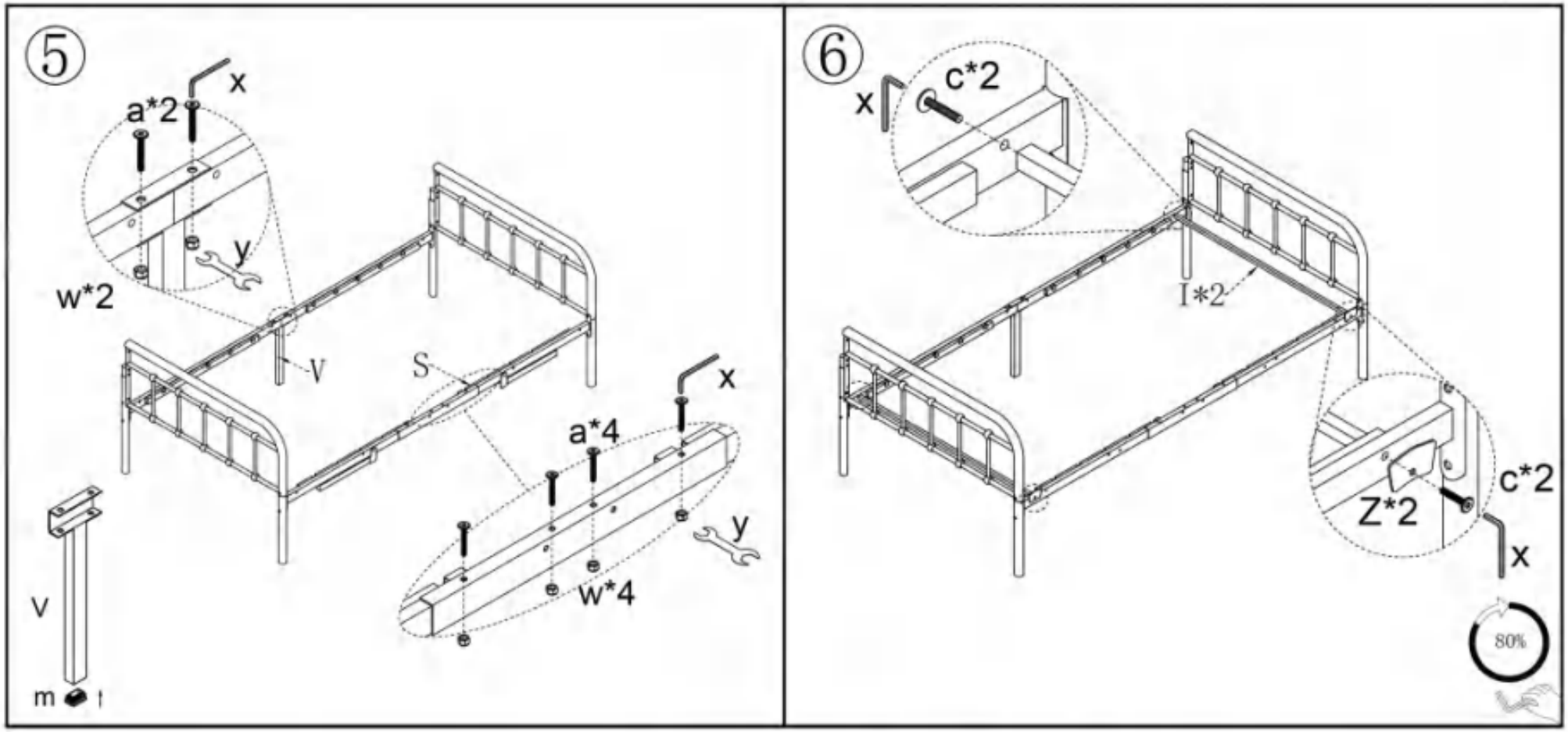

5 NOTE: PLEASE DO NOT TIGHTEN THE BOLTS UNTIL ALL FIXED

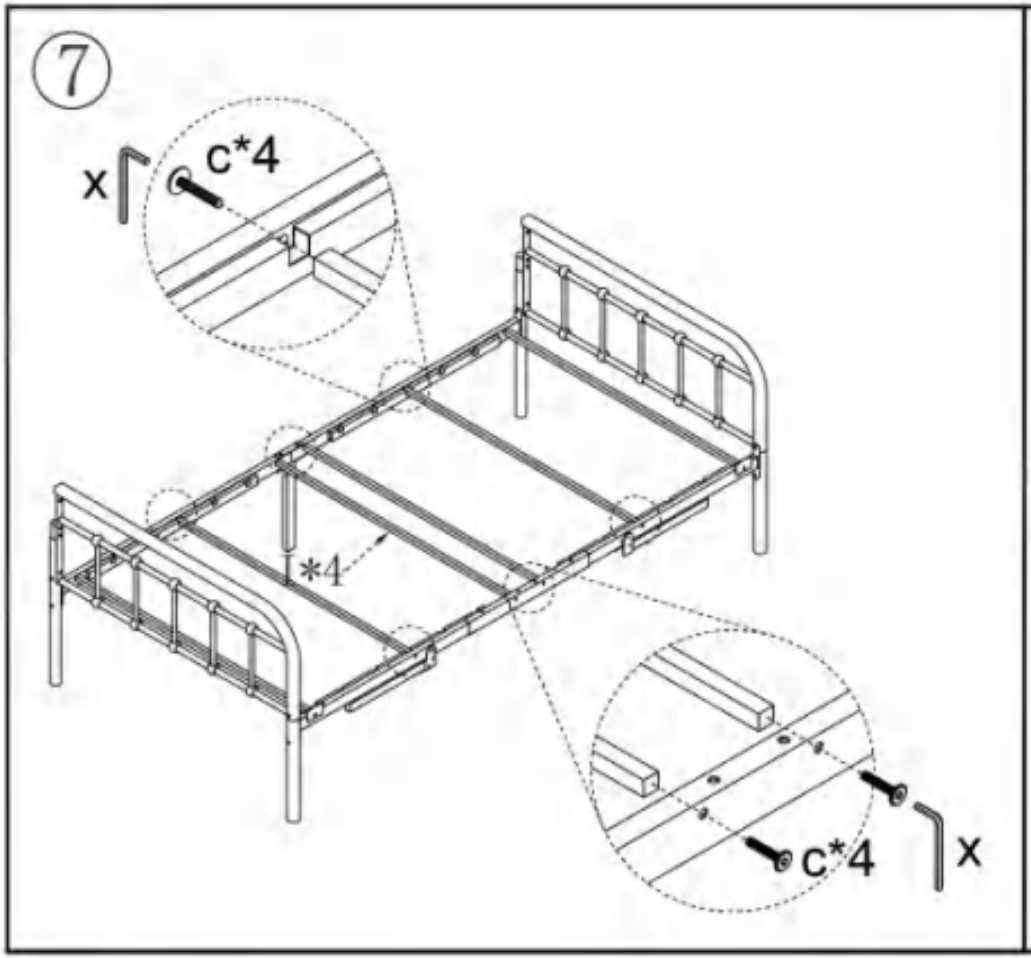

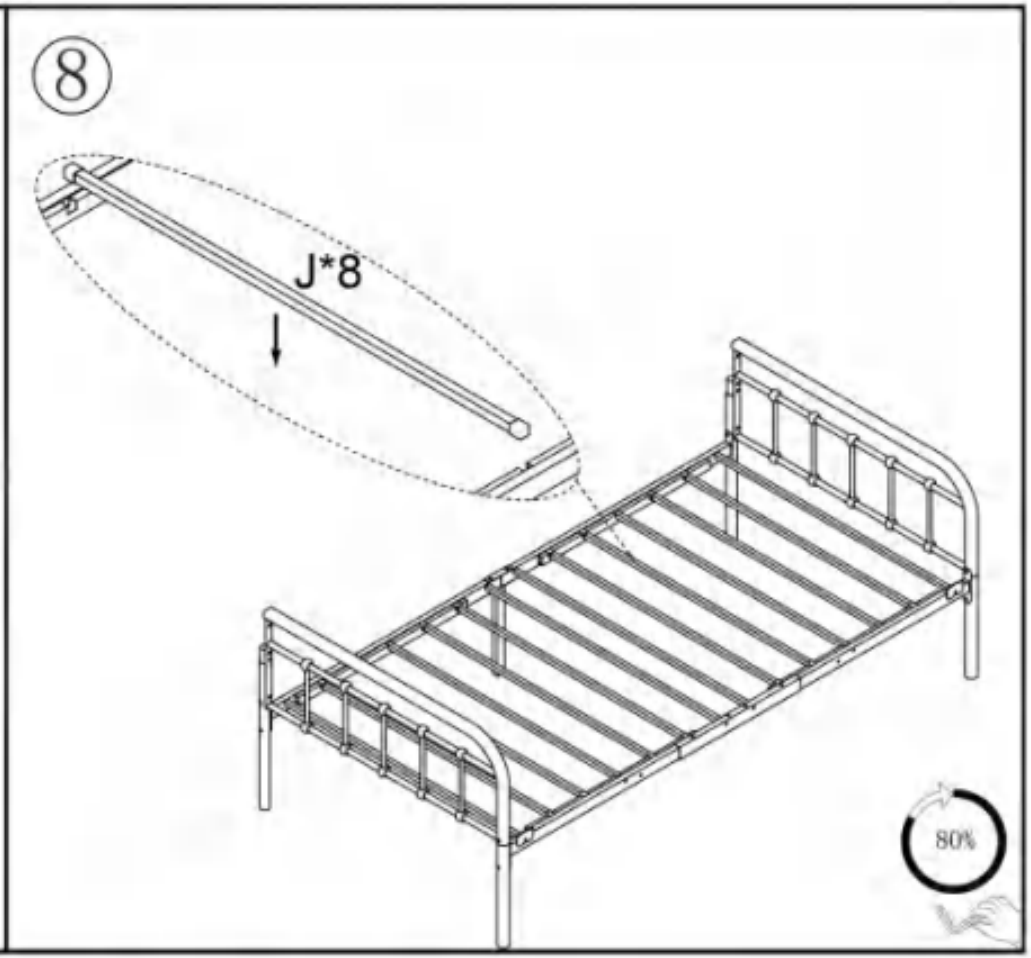

6 NOTE: PLEASE DO NOT TIGHTEN THE BOLTS UNTIL ALL FIXED

⑨

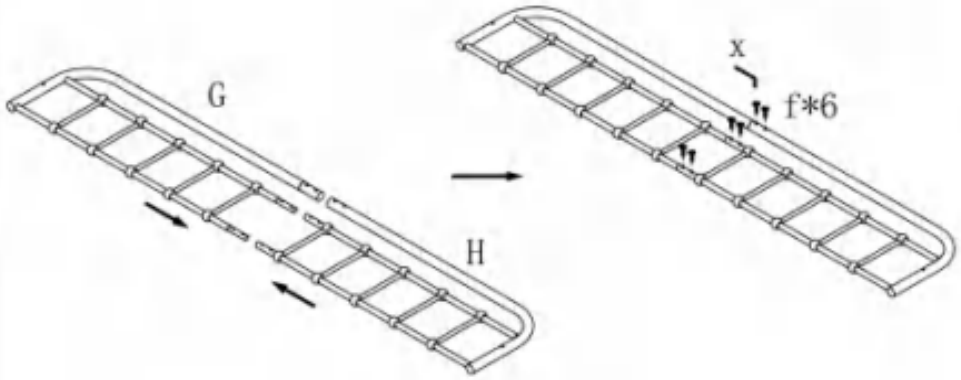

⑩

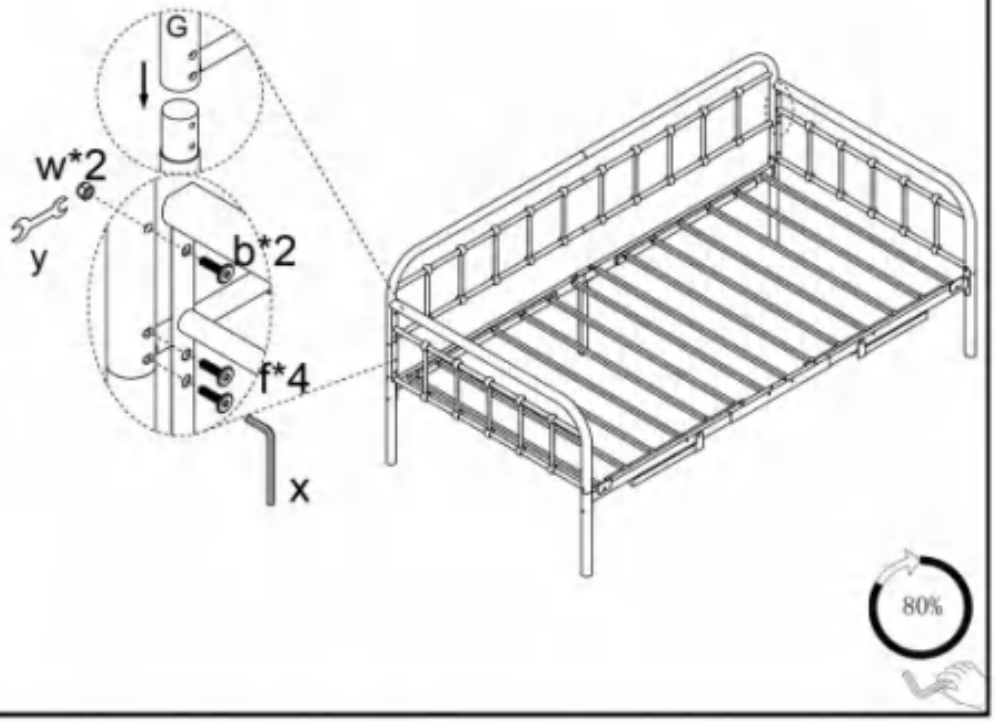

7 NOTE: PLEASE DO NOT TIGHTEN THE BOLTS UNTIL ALL FIXED

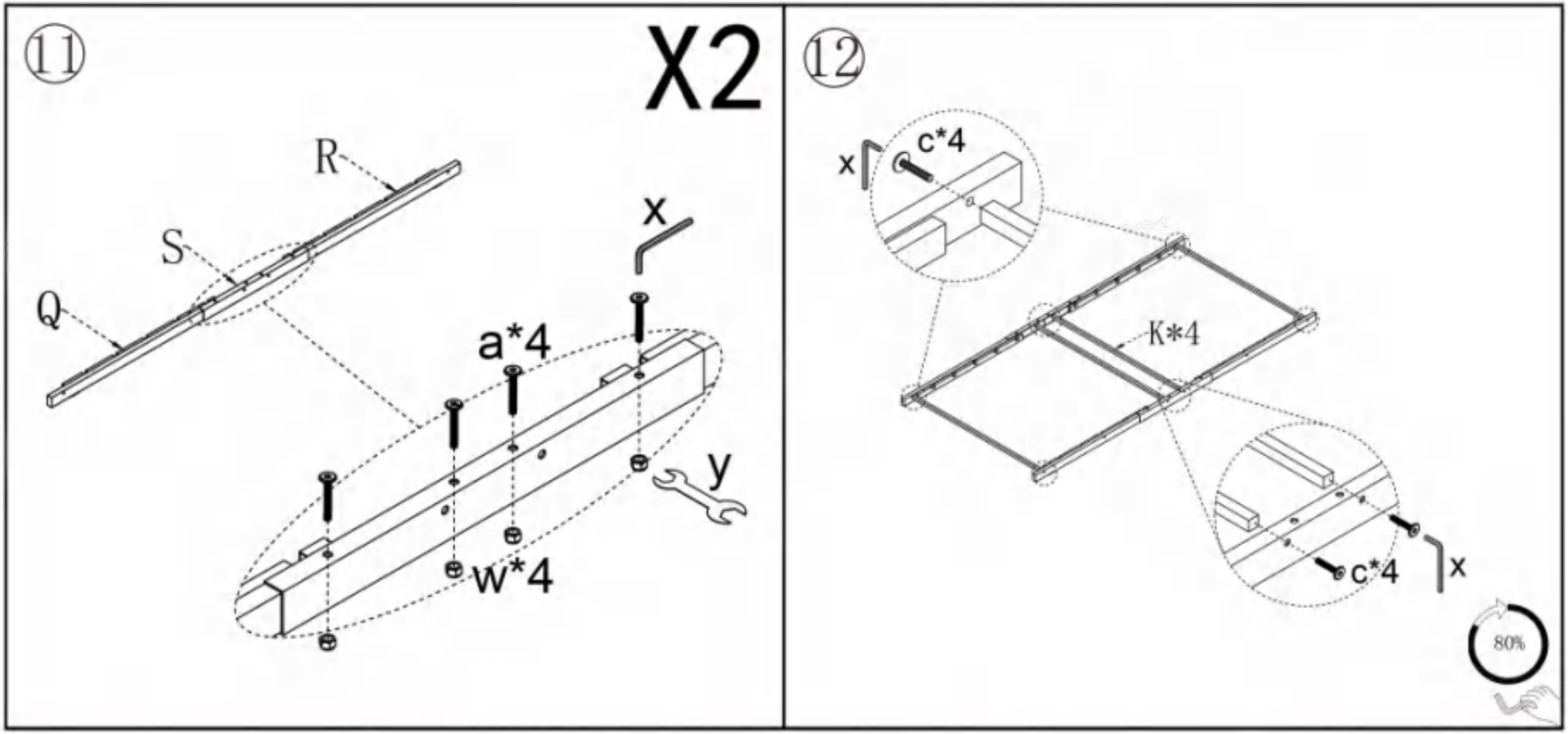

8 NOTE: PLEASE DO NOT TIGHTEN THE BOLTS UNTIL ALL FIXED

13

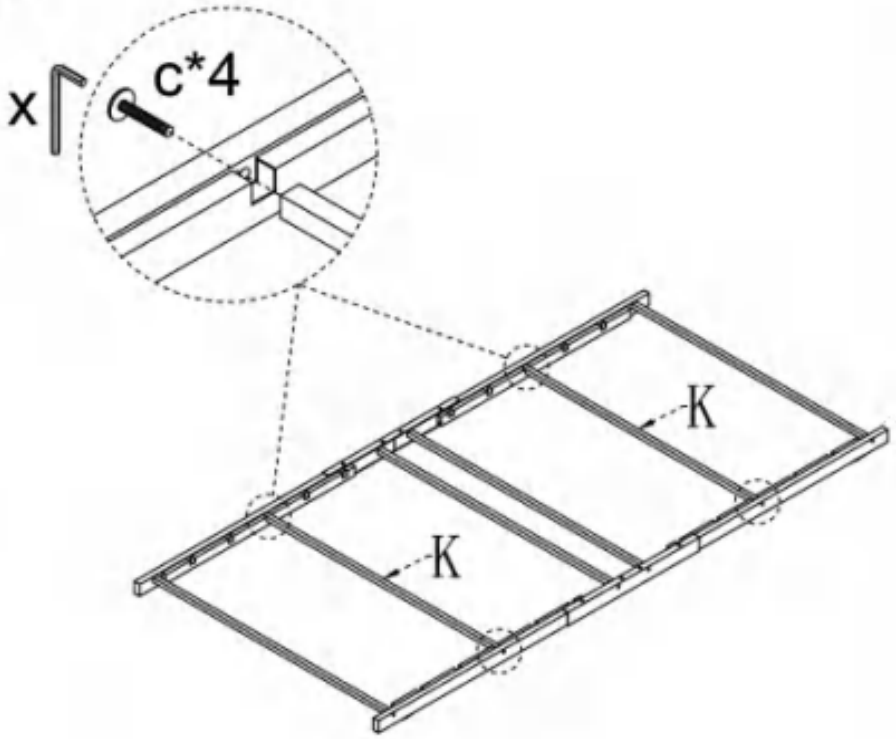

14

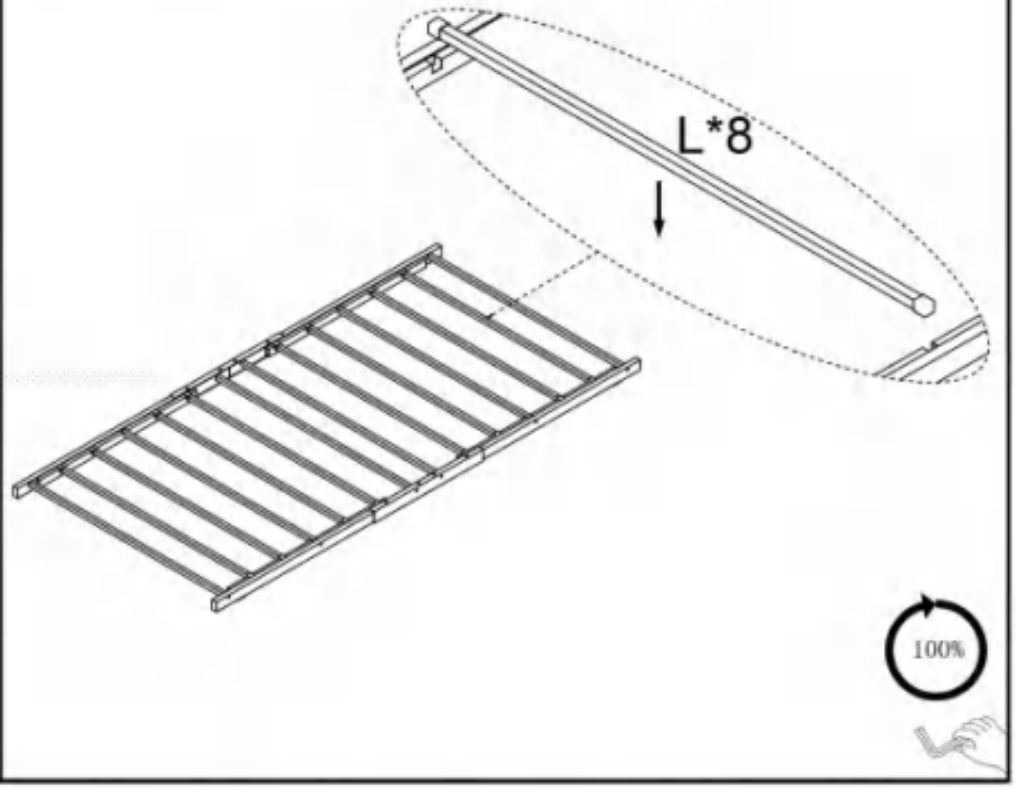

9 NOTE: PLEASE DO NOT TIGHTEN THE BOLTS UNTIL ALL FIXED

15

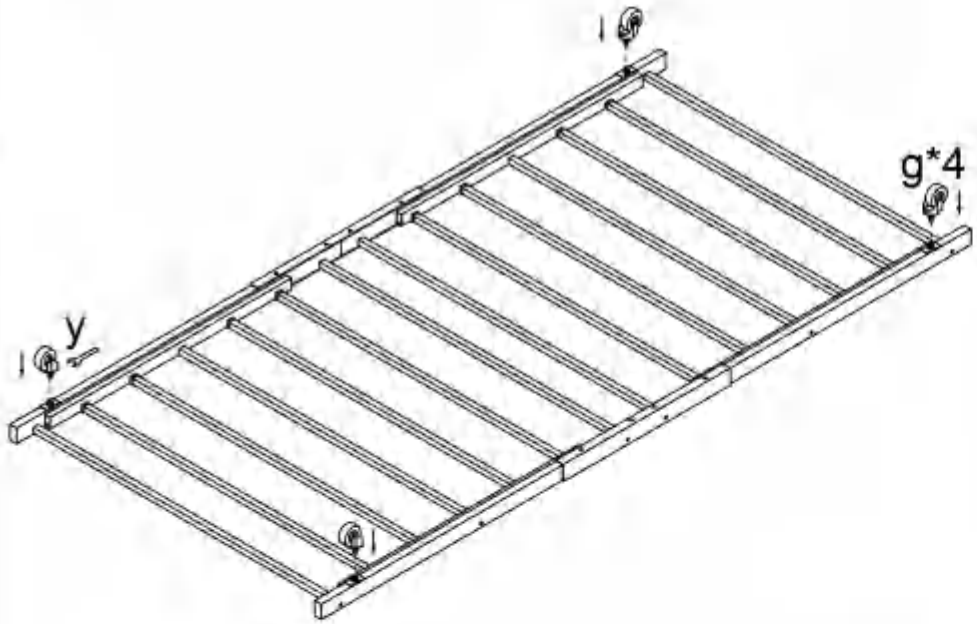

16

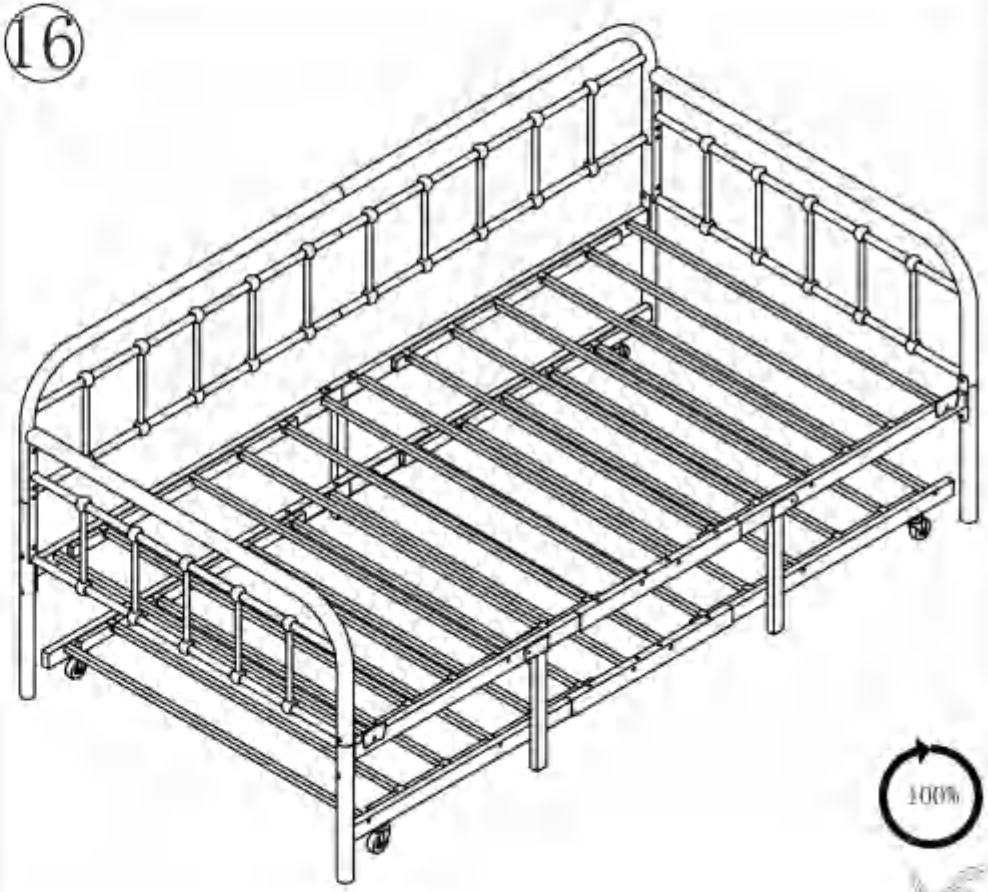

IMPORTANT:Please completely tighten all the bolts and nuts.