TV & Media Furniture

Television Stands & Entertainment Centers

Fireplace TV Stand for 98" TV

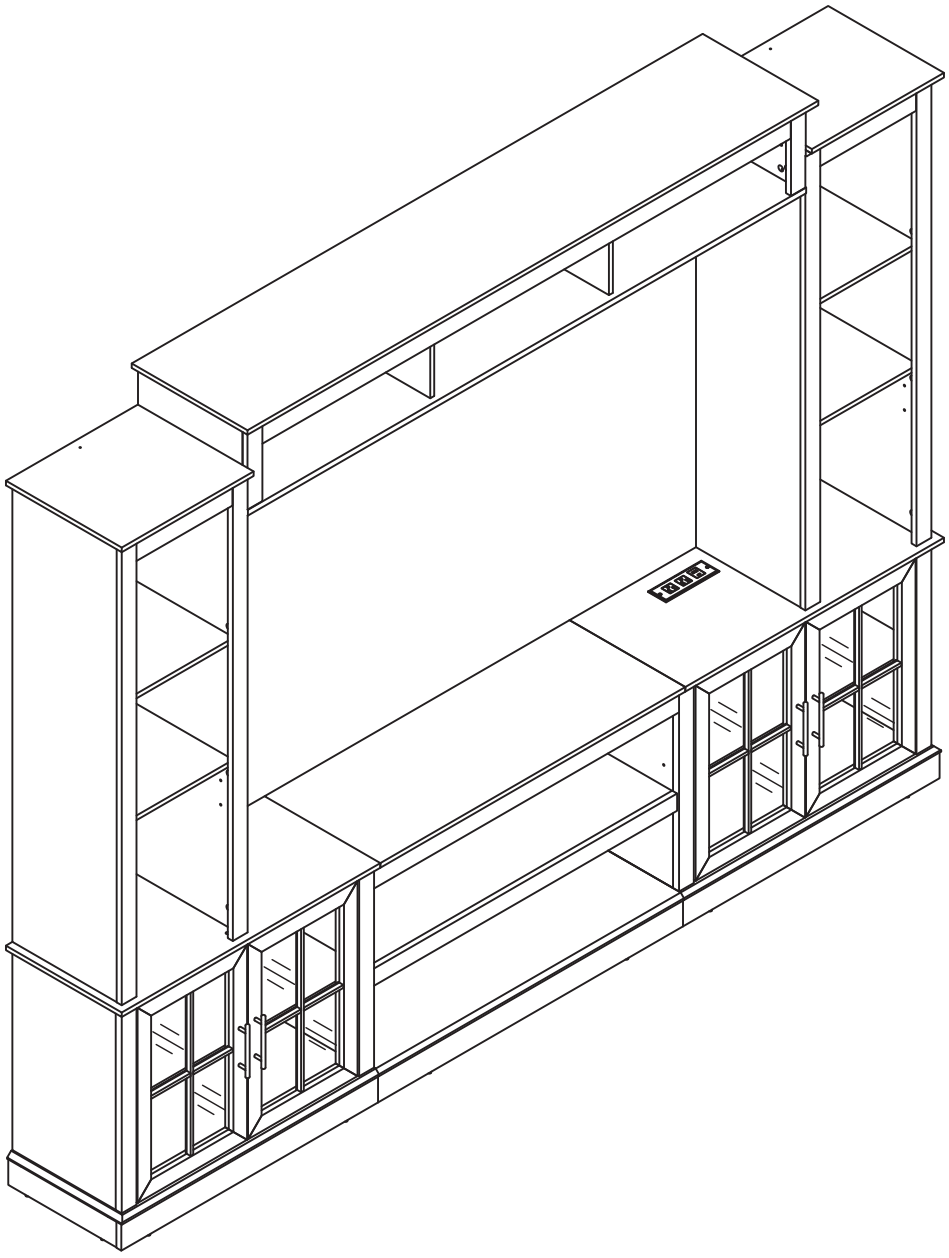

(24/7):service@kmcgloble-us.com

(USA) +1 213-816-4788

ATTENTION 

1. The product must be assembled and used according to the manual. The seller is not liable for any damage caused by incorrect assembly or misuse.
2. Do not sit or stand on the product.
3. Place the item on a flat surface.
4. Keep small parts away from children to avoid choking hazards.
5. Keep product away from corrosive gases, liquids and dusty environment.
6. Keep the original box(es) until assembly is complete or no quality issues need to be confirmed.

AFTER-SALE SERVICE

If you have any suggestions or encounter quality issues with our products, please contact us first. Our after-sales team will respond within 24 hours, and we will do our best to provide a solution until you are satisfied.

GUARANTEED CUSTOMER SERVICE

Your shopping experience is very important to us!

If you feel unsatisfied or have any questions, just contact us without any hesitation!

If you want to share how wonderful our smart product makes your home, you can share your pictures with us!

For further information, contacts immediately:

 **service@kmcgloble-us.com**

PARTS

BOX A

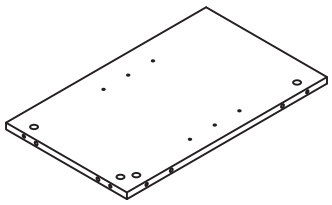

4 × 1

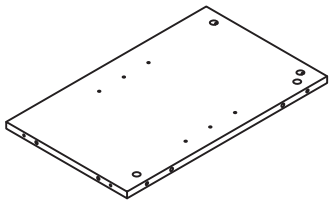

9 × 1

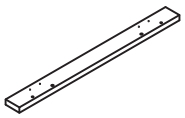

10 × 4

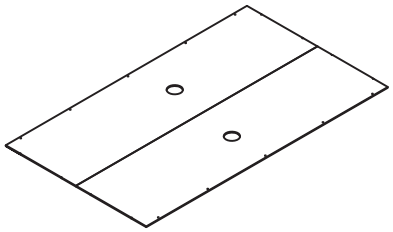

24 × 1

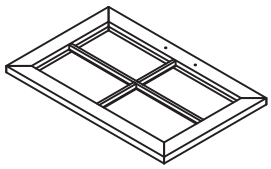

27 × 2

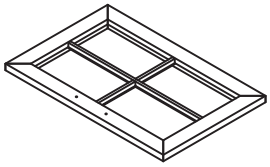

28 × 2

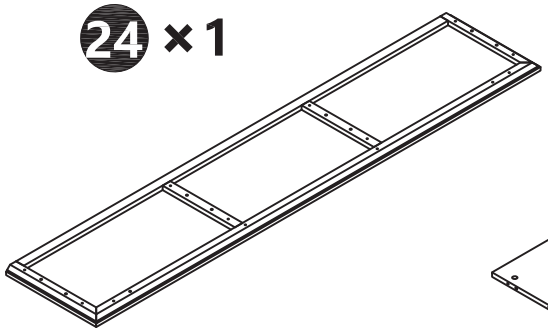

29 × 1

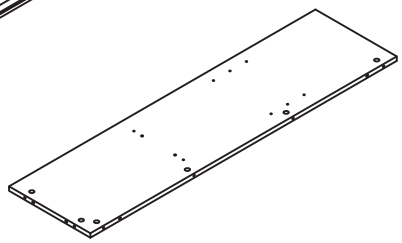

32 × 1

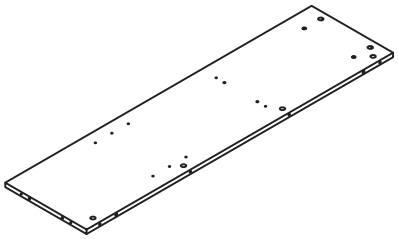

33 × 1

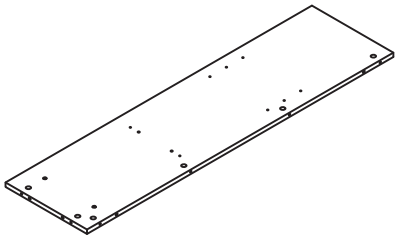

34 × 1

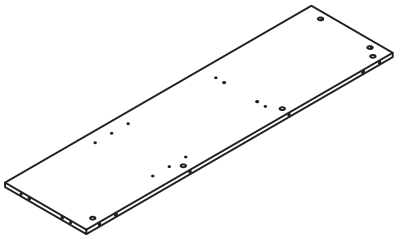

35 × 1

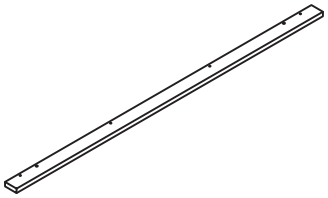

36 × 2

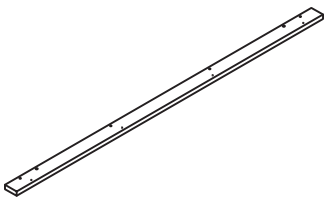

37 × 2

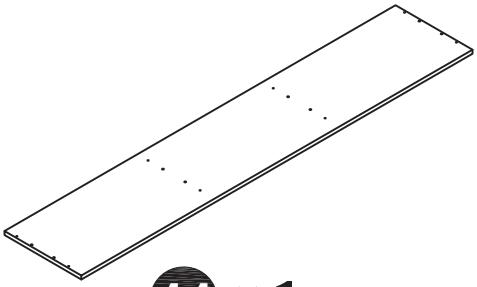

44 × 1

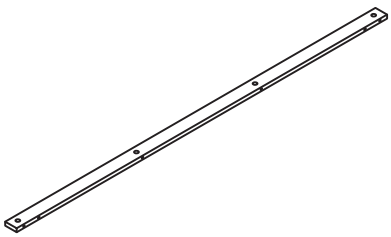

45 × 1

PARTS

BOX A

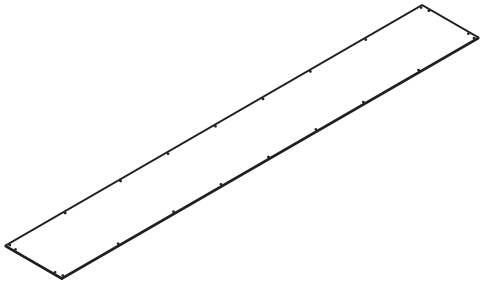

47 × 1

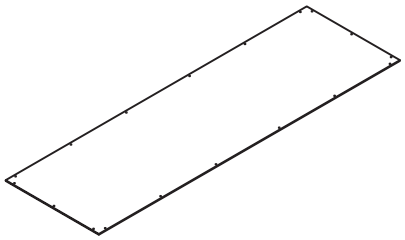

48 × 2

PARTS

BOX B

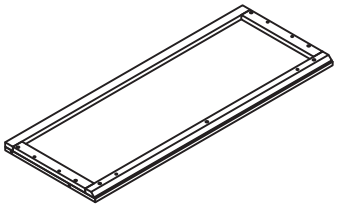

1 ×1

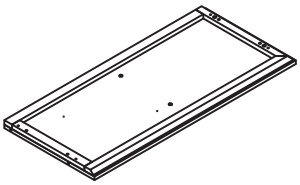

2 ×1

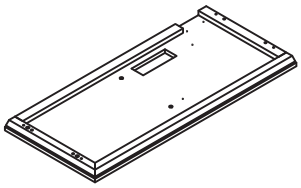

3 ×1

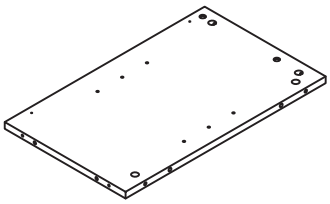

5 ×1

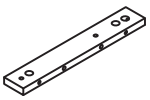

6 ×1

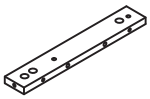

7 ×1

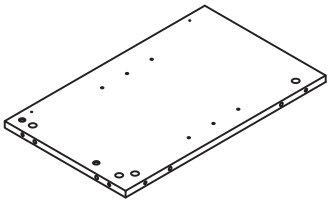

8 ×1

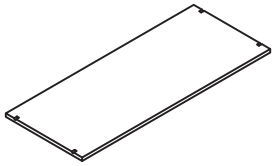

11 ×2

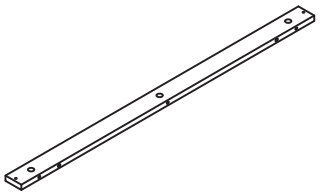

12 ×1

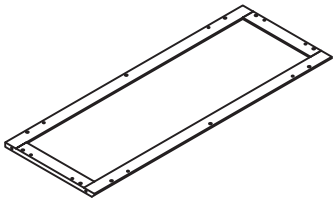

13 ×1

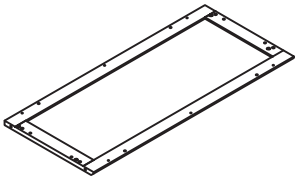

14 ×1

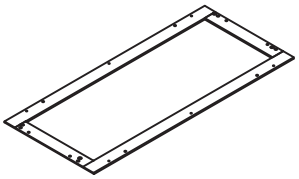

15 ×1

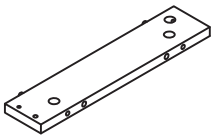

16 ×1

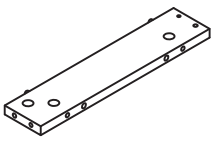

17 ×1

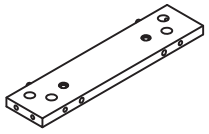

18 ×2

PARTS

BOX B

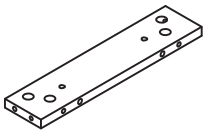

19 × 2

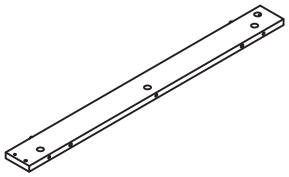

20 × 1

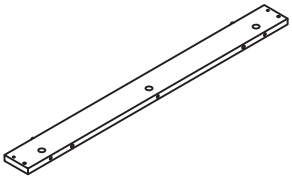

21 × 2

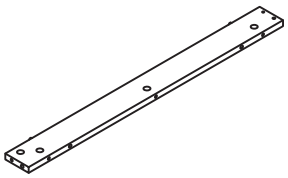

22 × 1

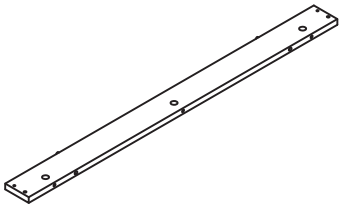

23 × 2

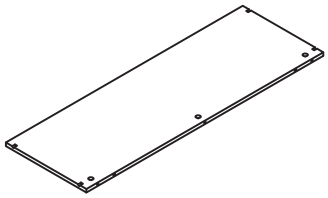

25 × 1

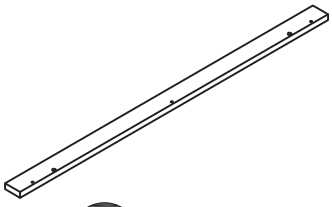

26 × 1

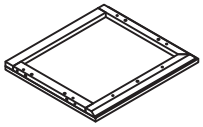

30 × 1

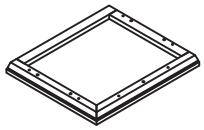

31 × 1

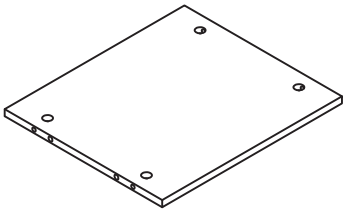

38 × 2

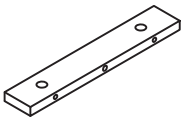

39 × 2

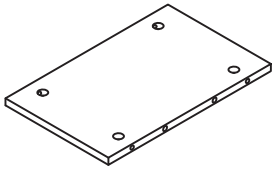

40 × 2

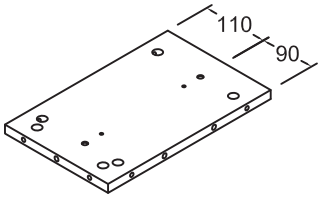

41 × 1

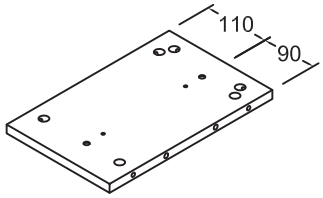

42 × 1

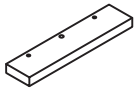

43 × 2

HARDWARE

BOX B

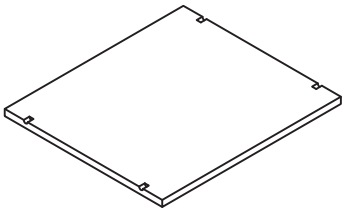

46 ×2

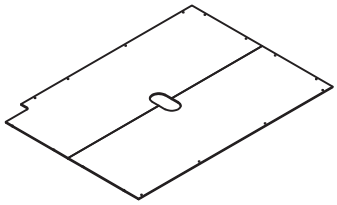

49 ×2



Φ15x11mm

A ×130+3



Φ6.5x35mm

B ×130+3

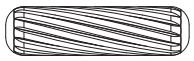

Φ6x30mm

C ×138+3

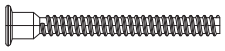

Φ6.3x50mm

D ×24+2



Φ3.5x14mm

E ×16+2

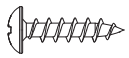

Φ3x12mm

F ×120+2



M6x25mm

G ×8+2



M4x22mm

H ×8+1

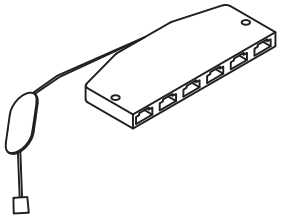

J ×1

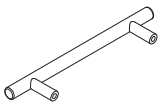

K ×4

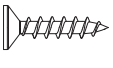

Φ4x14mm

L ×16+2

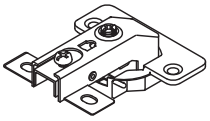

M ×8

HARDWARE

BOX B

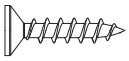

Φ3x12mm

N ×2+1

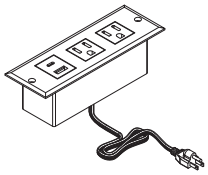

P ×1

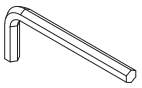

M4x65mm

Q ×1

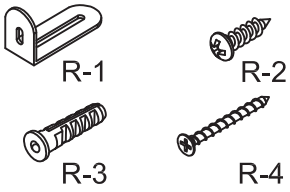

R ×2



S ×20+1



Φ3x25mm

T ×2



U ×4+1

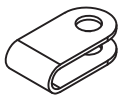

V ×12+1

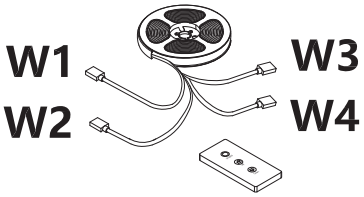

W ×1

EXPLOSION VIEW

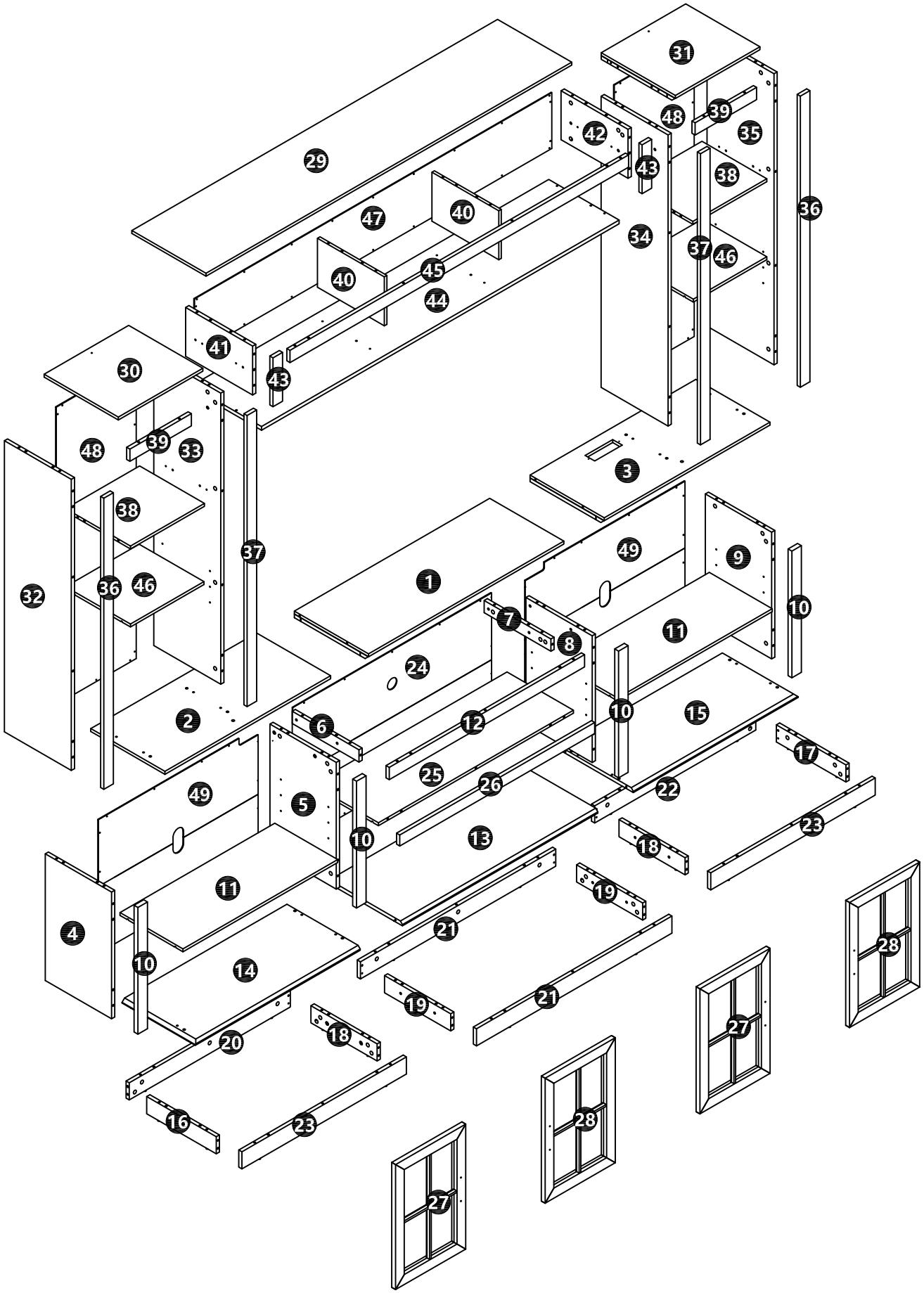

1

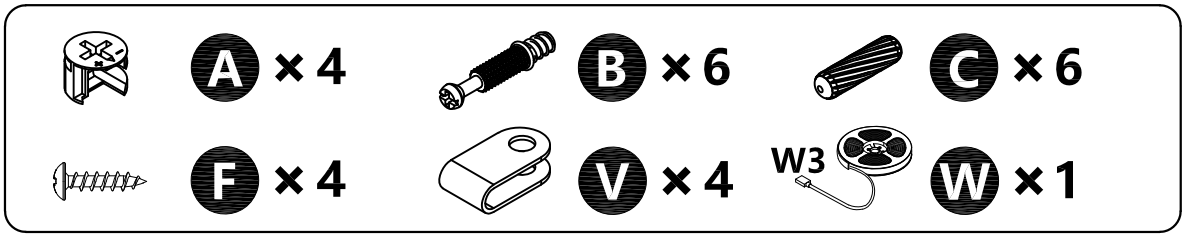

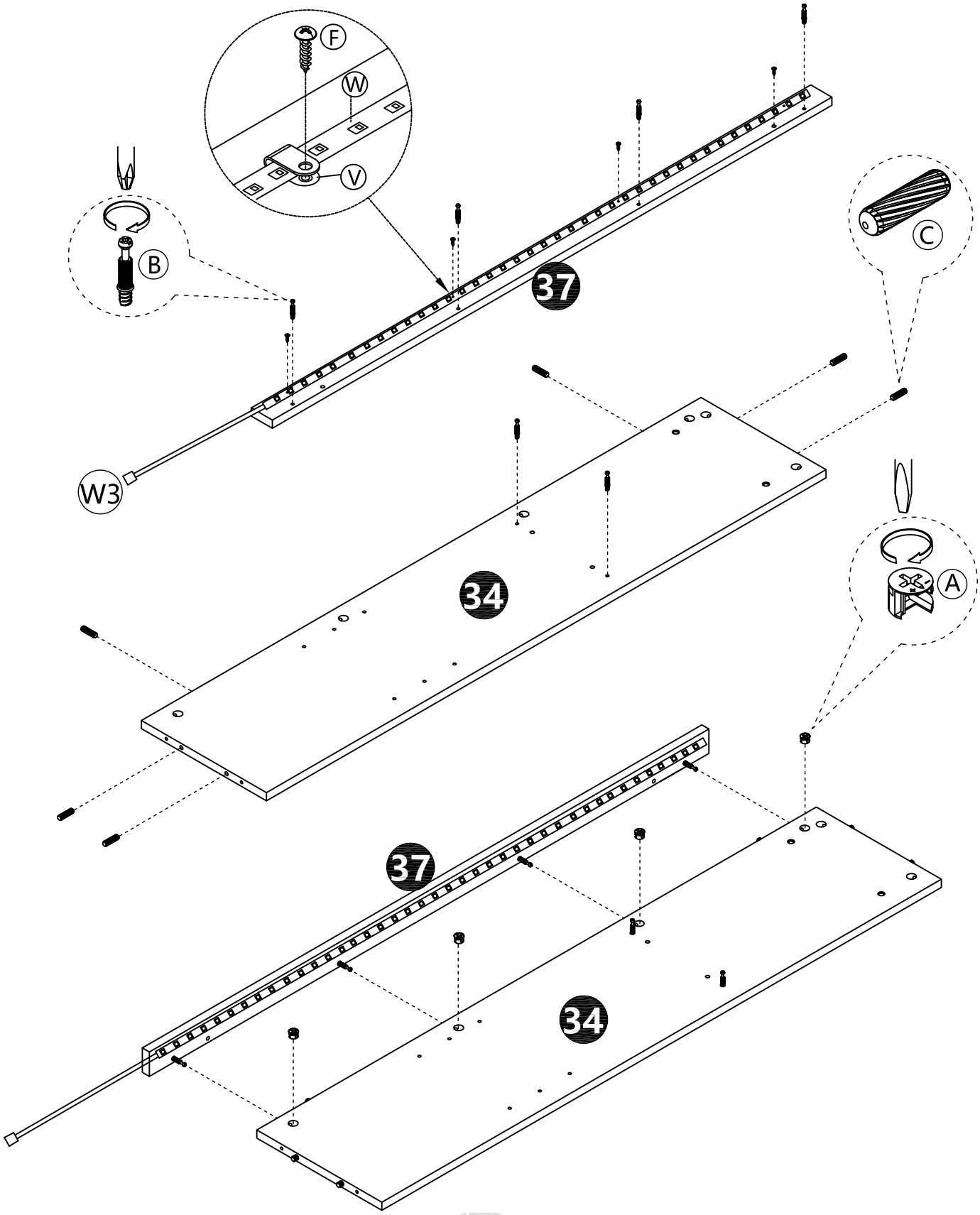

2

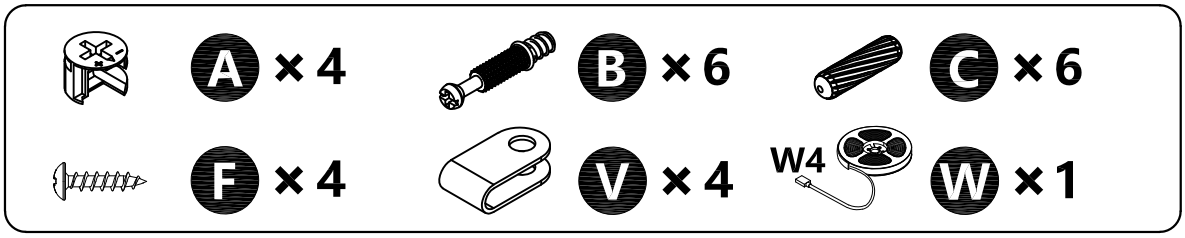

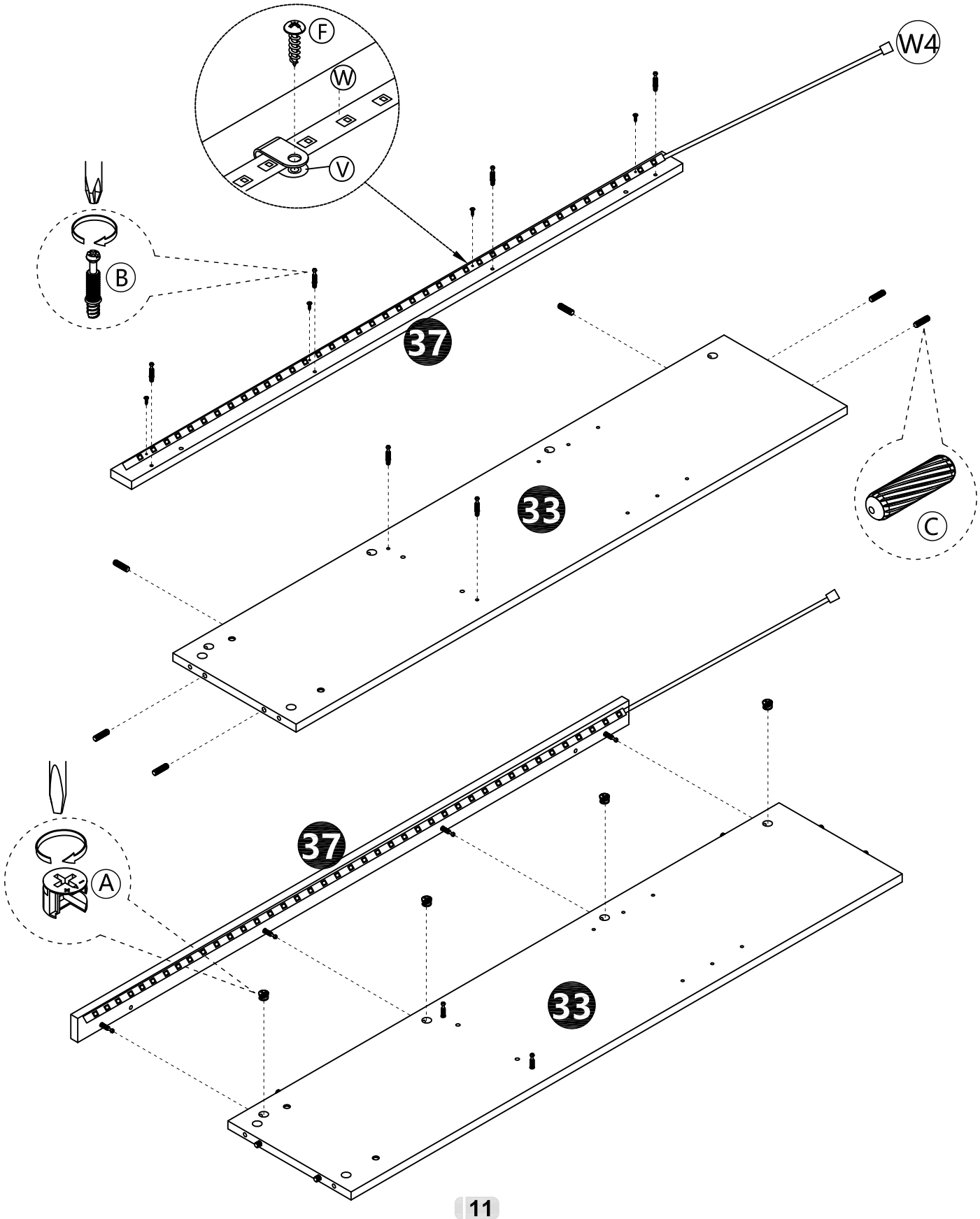

3

 A × 4  B × 6  C × 6

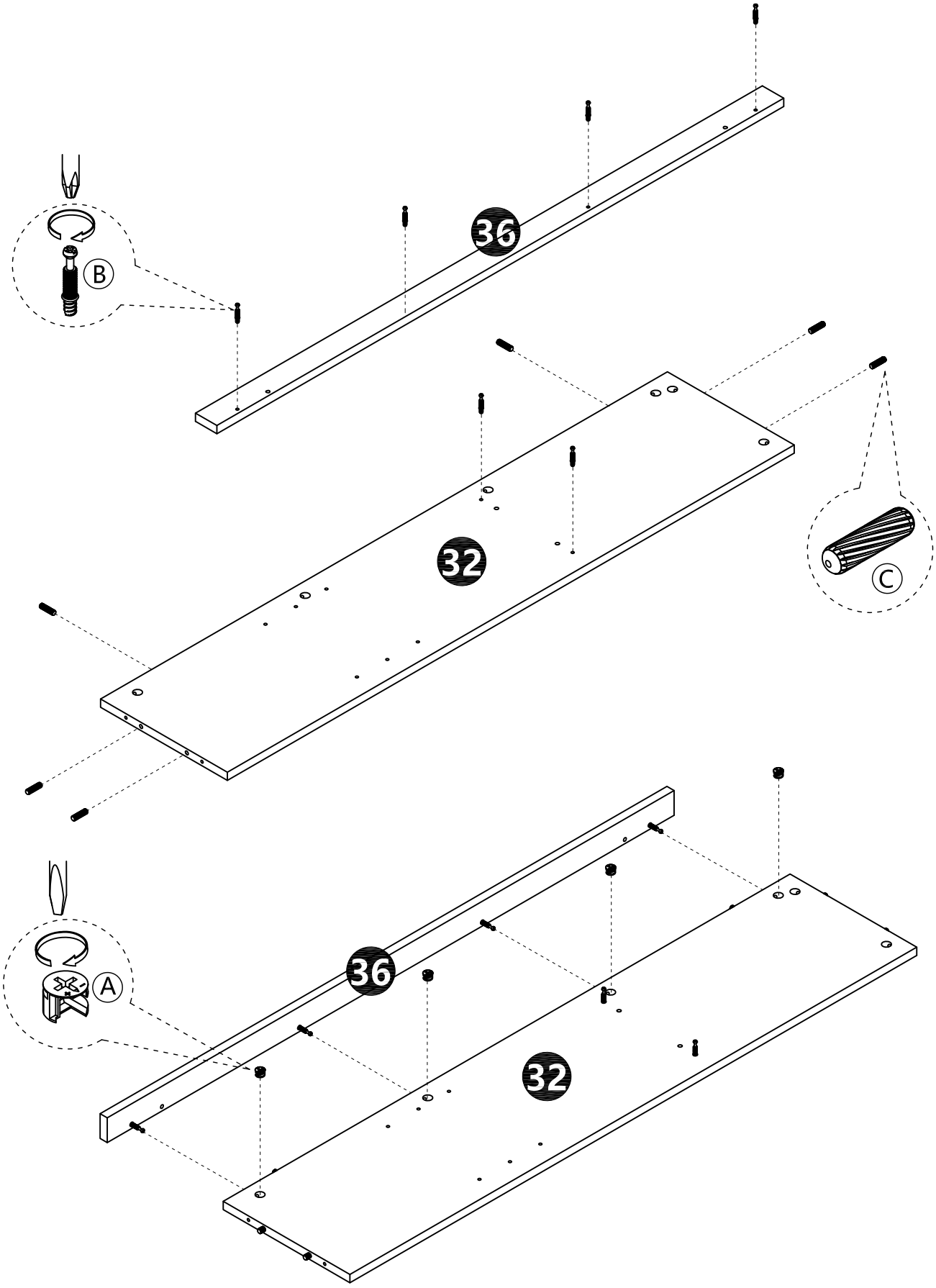

4

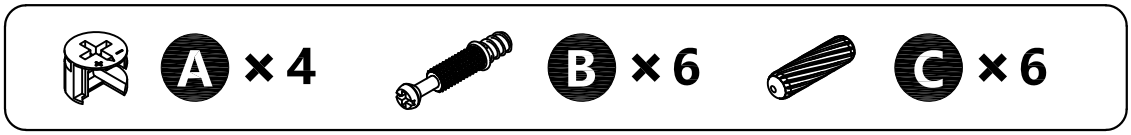

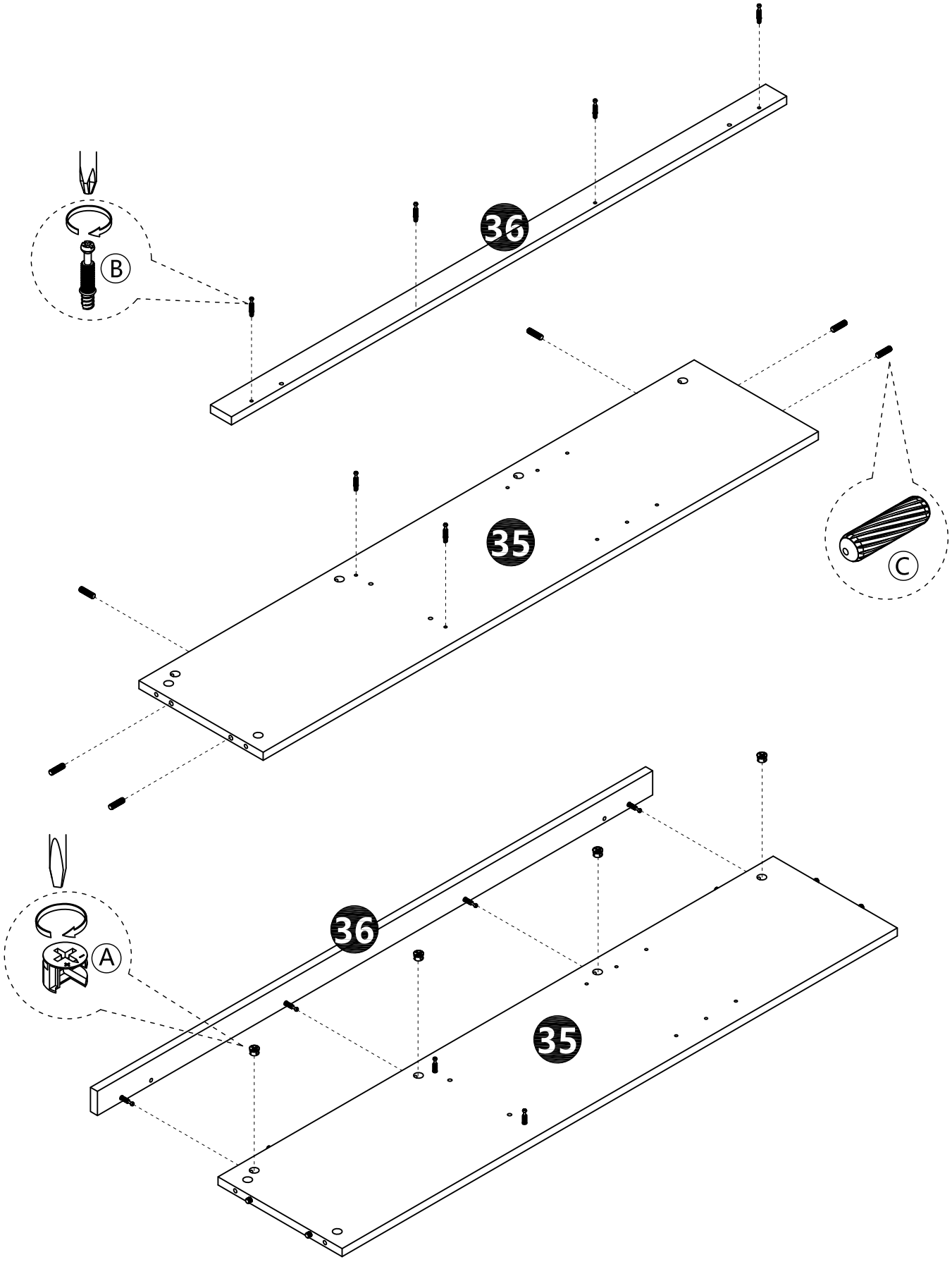

5

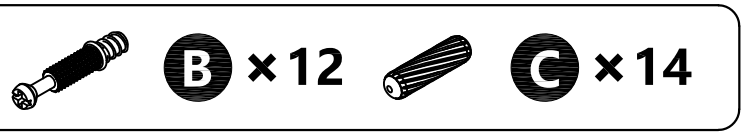

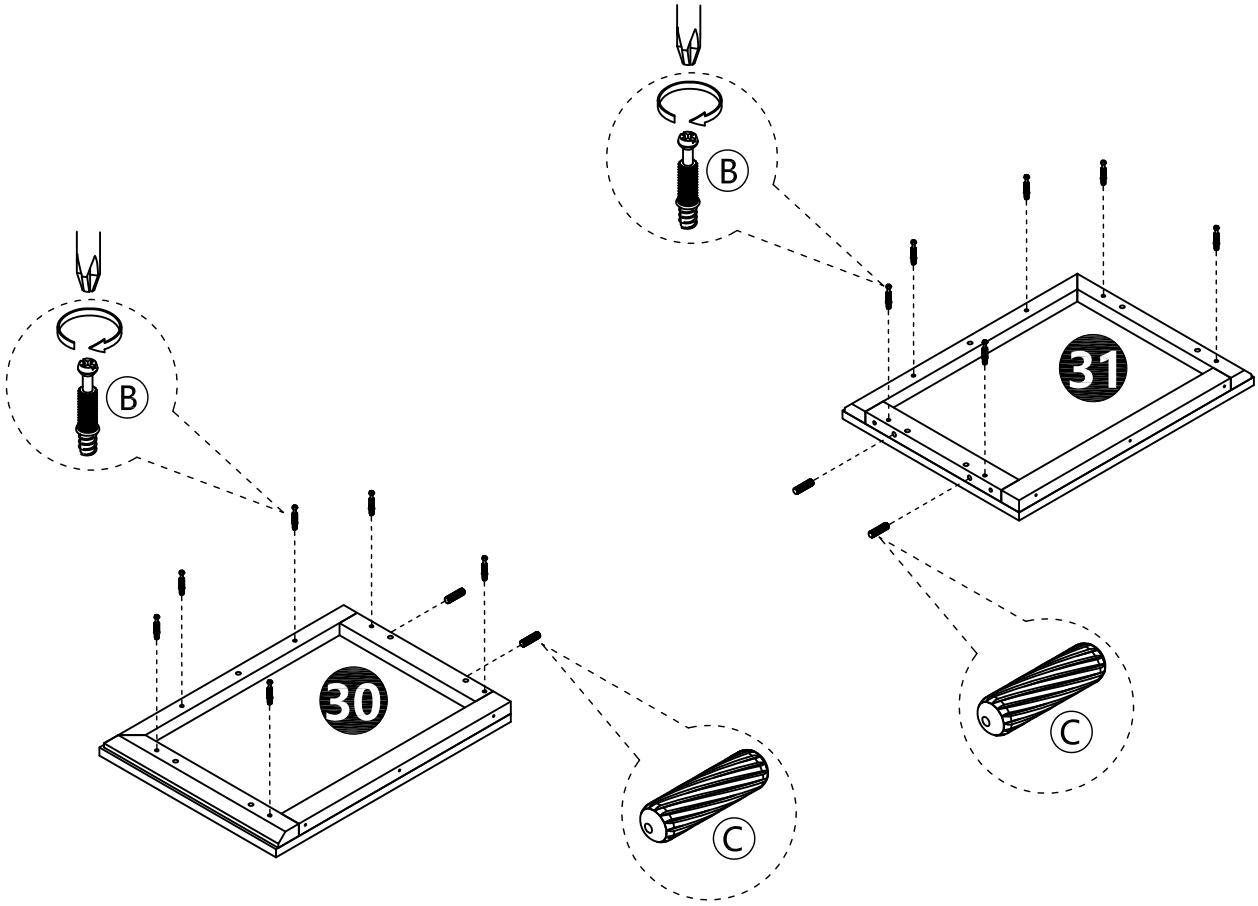

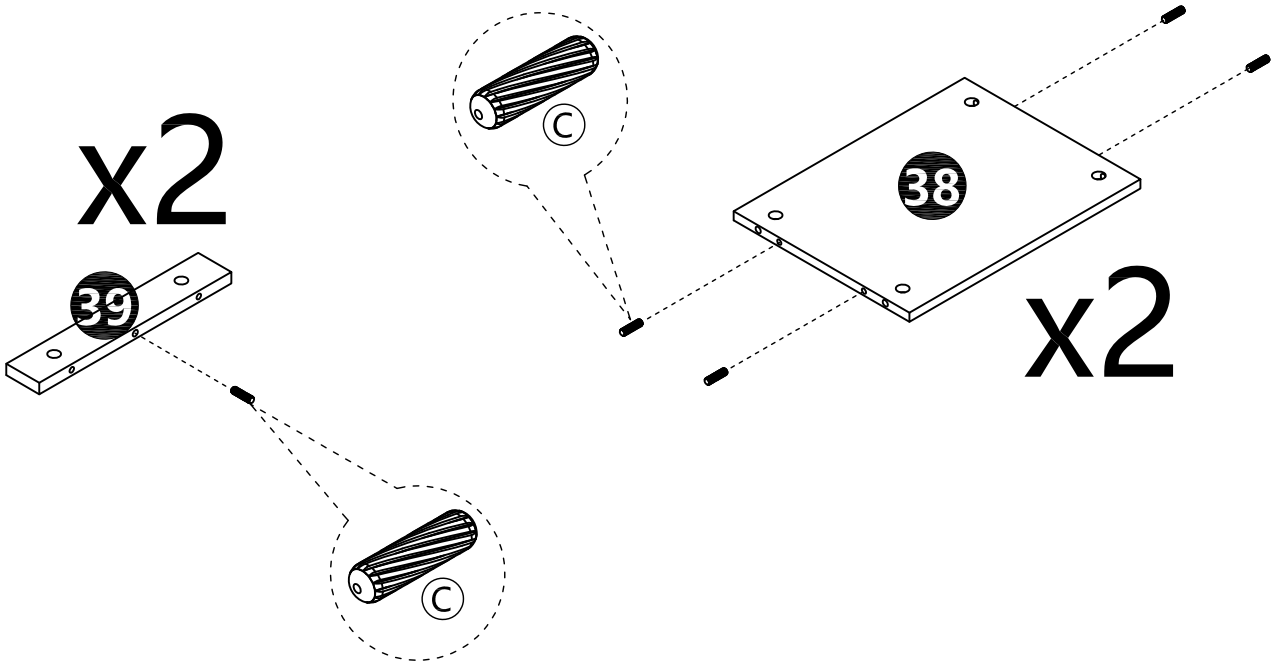

6

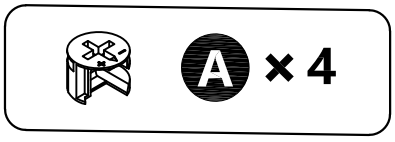

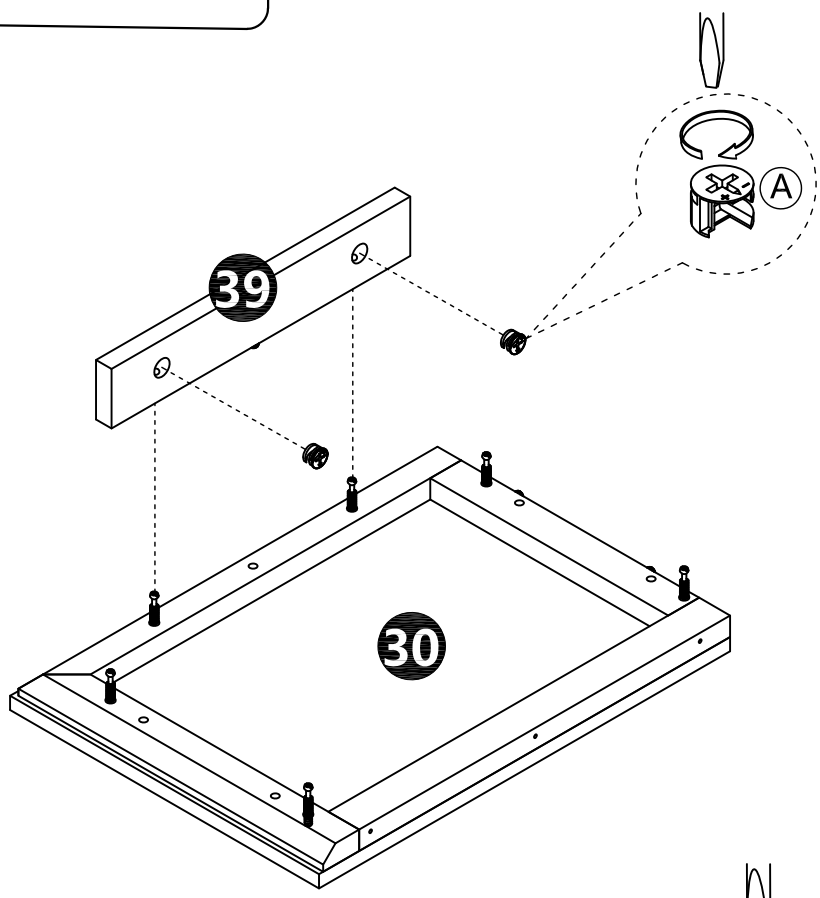

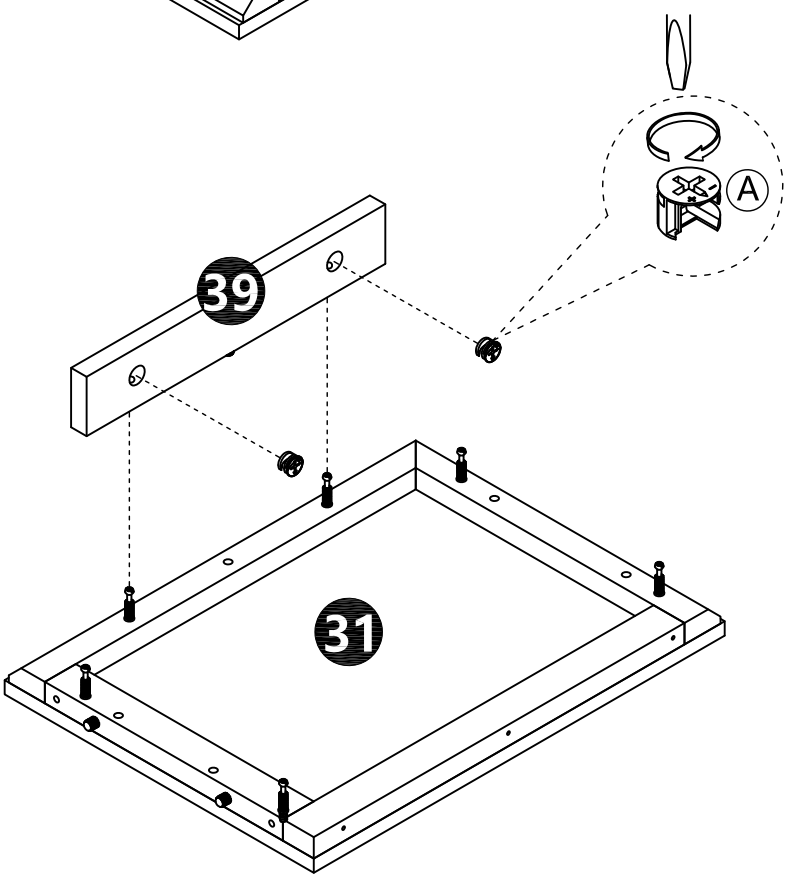

7

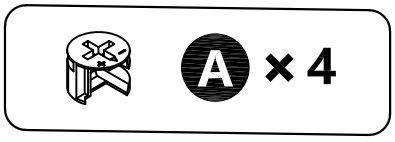

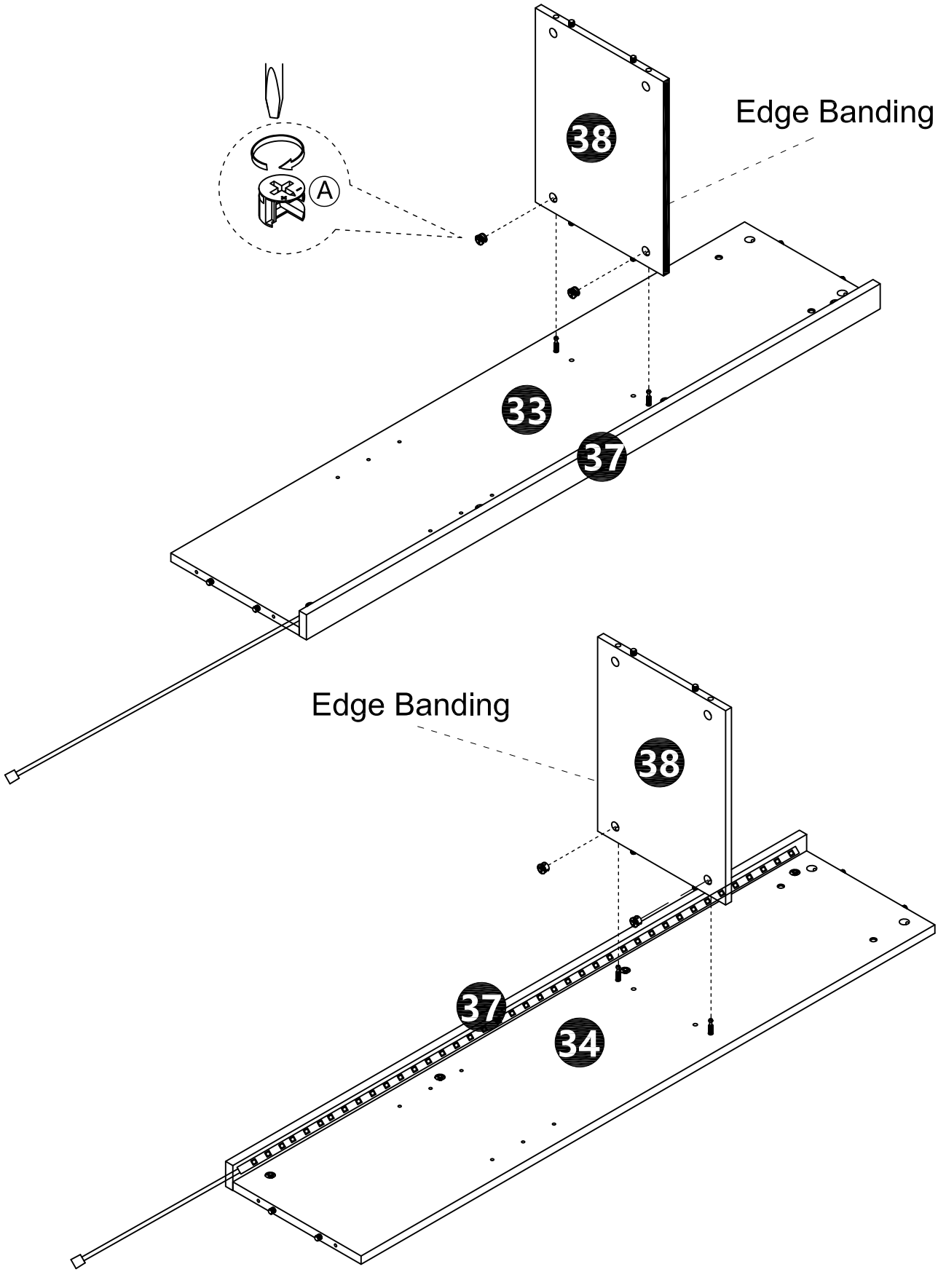

8

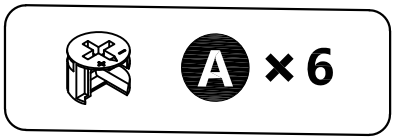

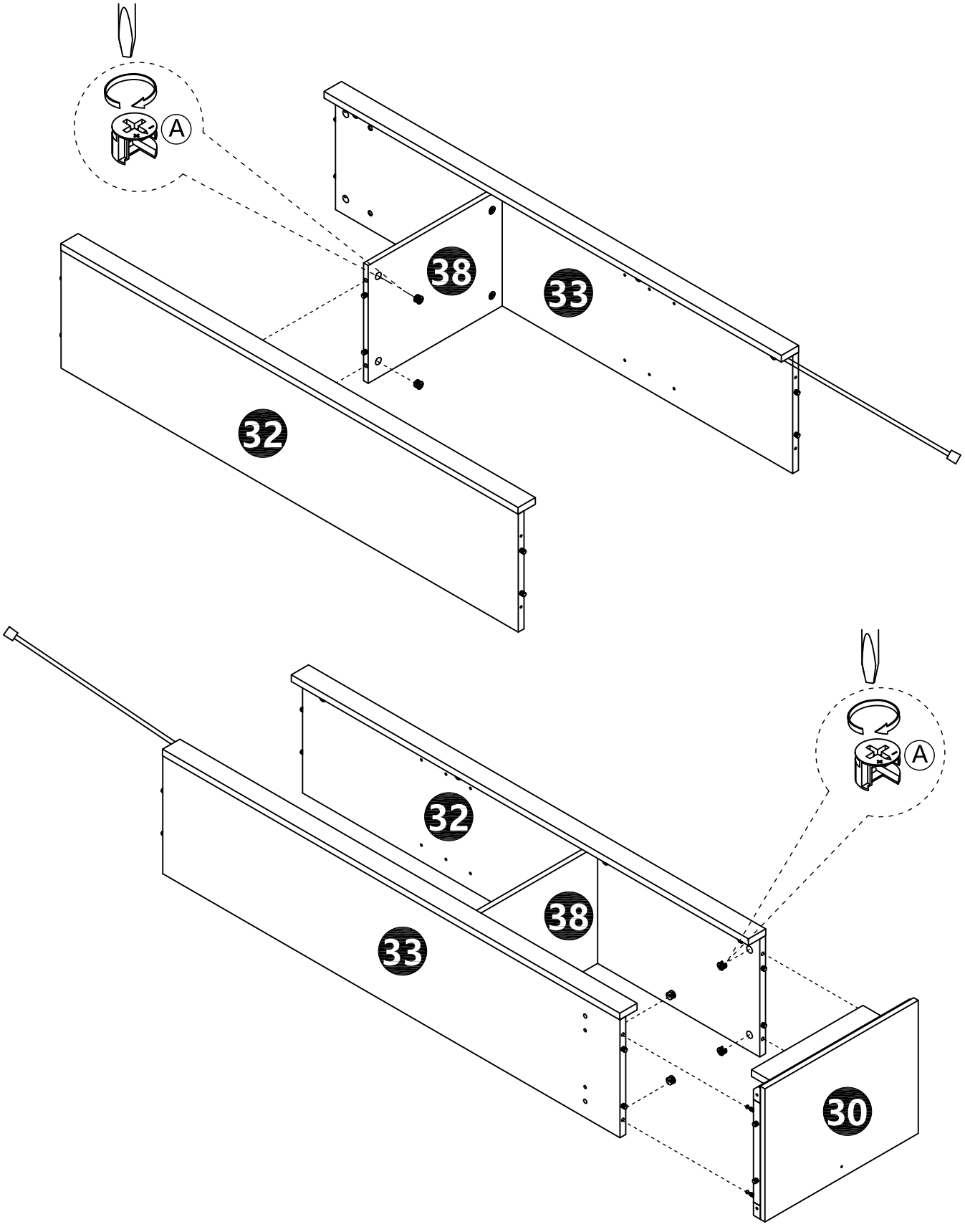

9

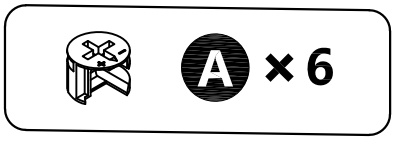

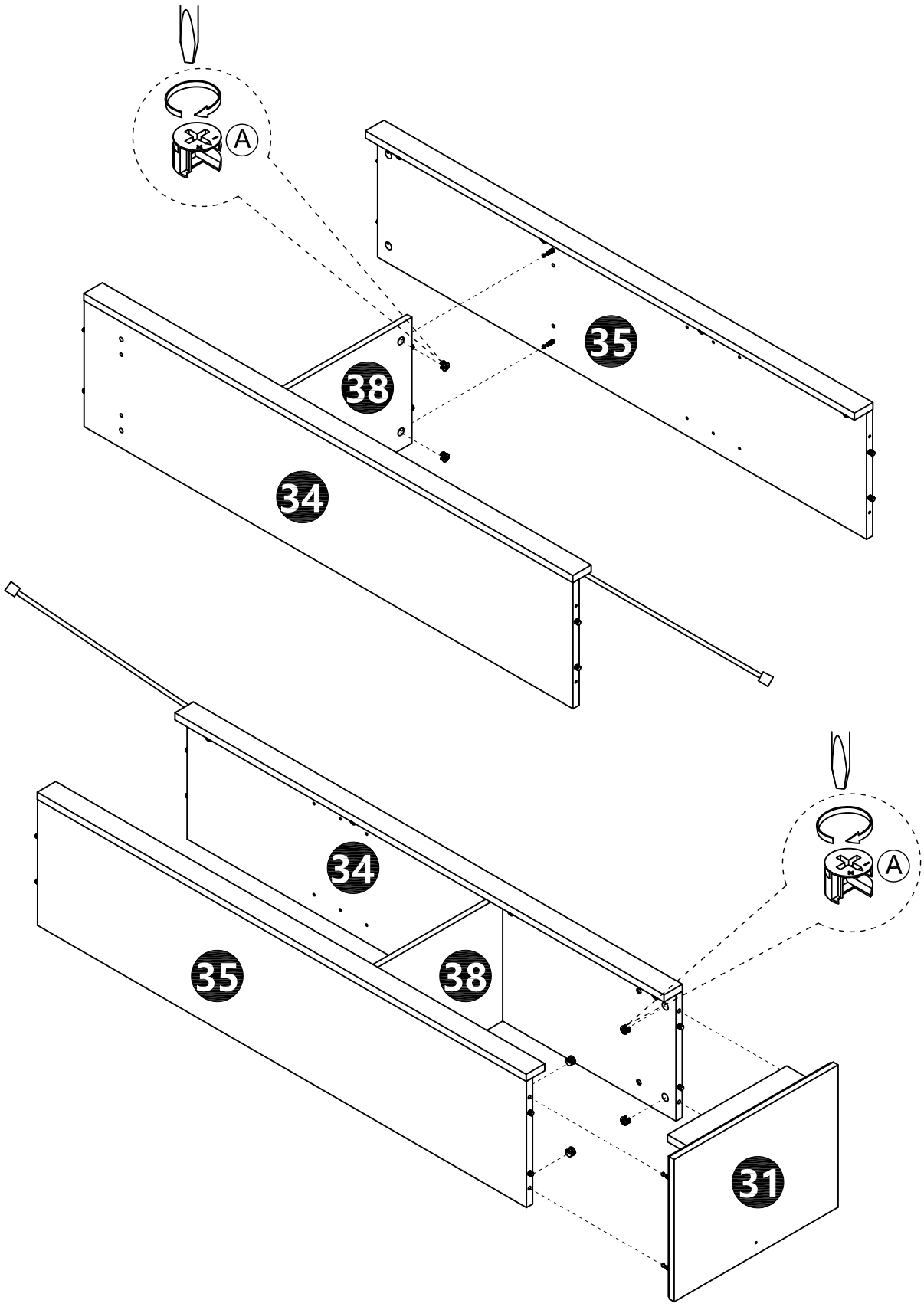

10

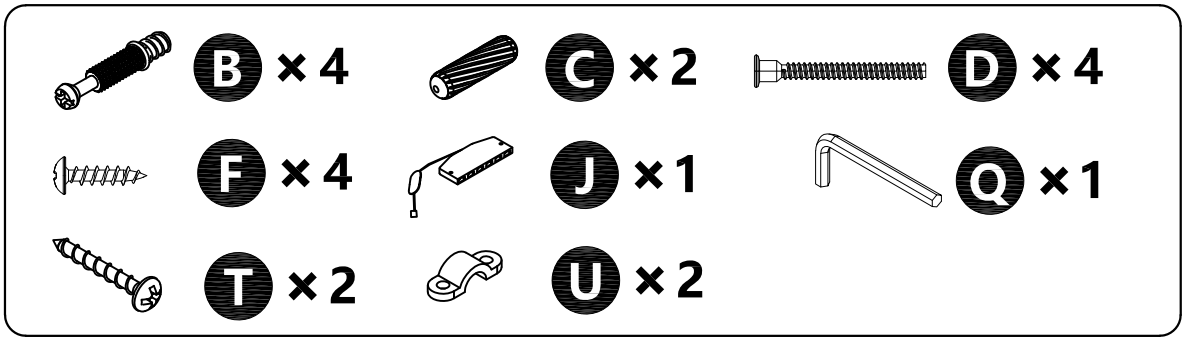

The light strip comes through the hole

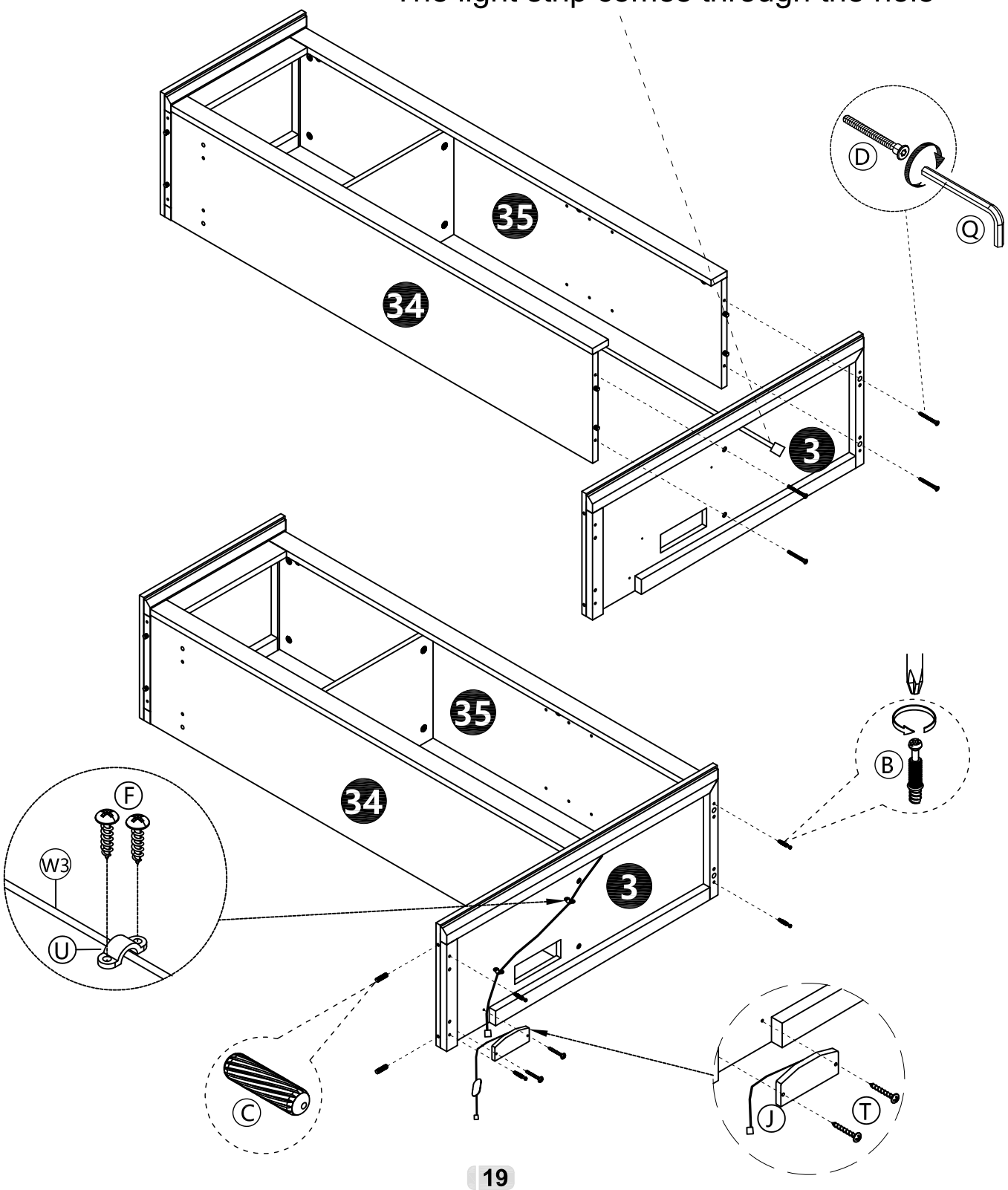

11

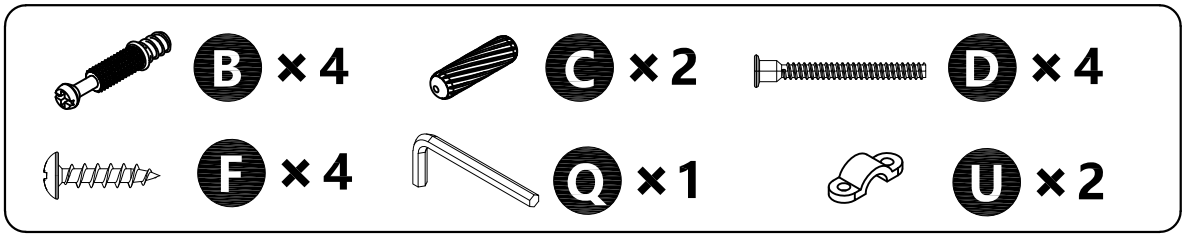

The light strip comes through the hole

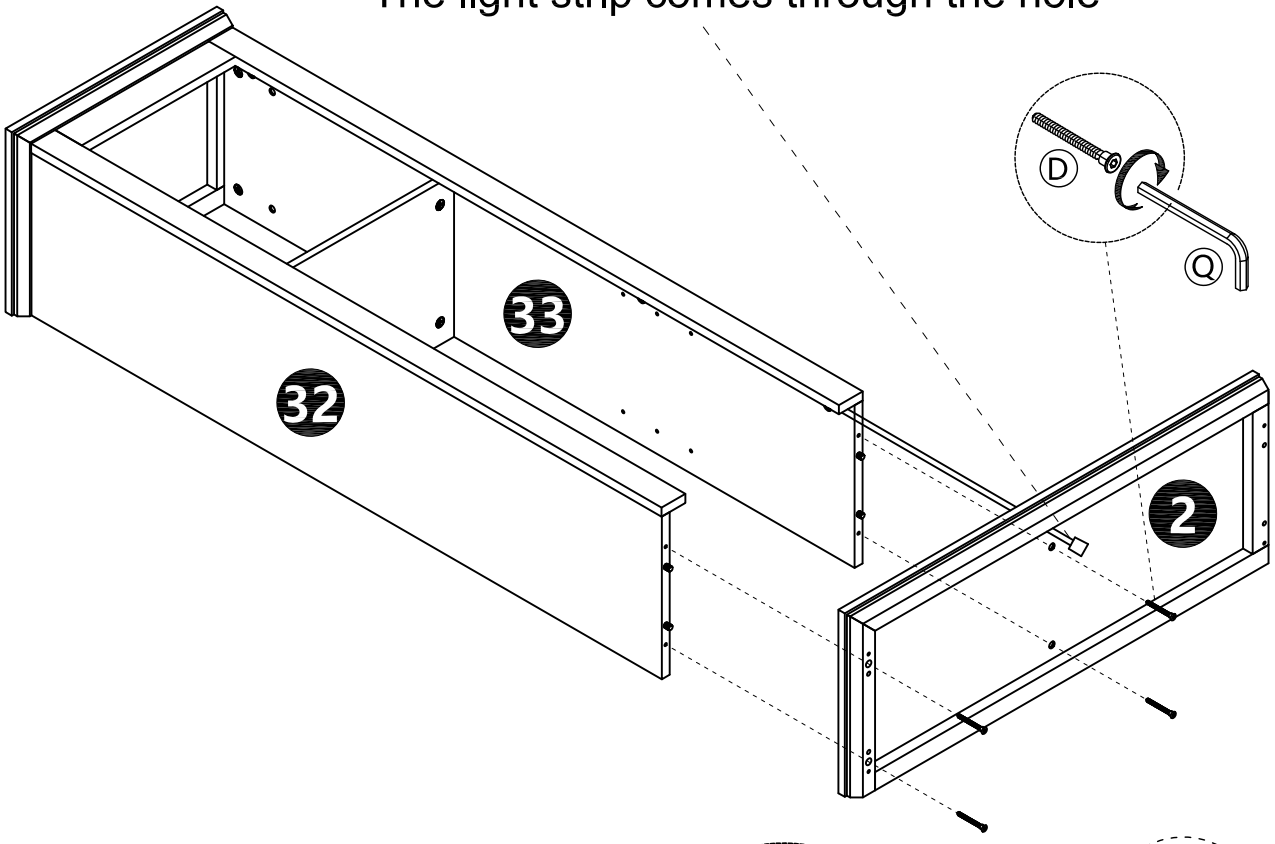

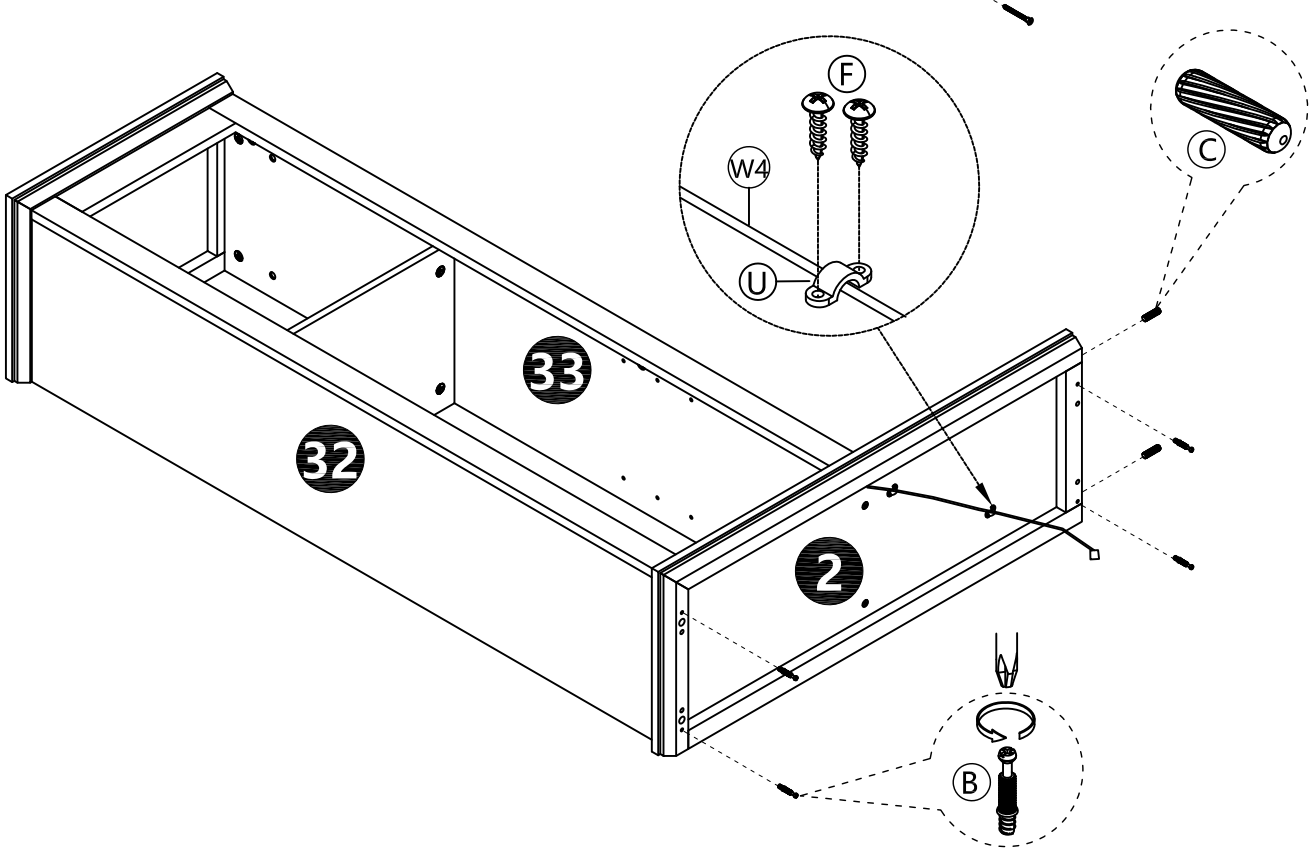

12

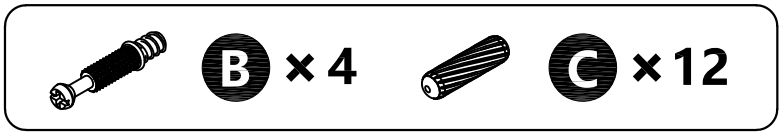

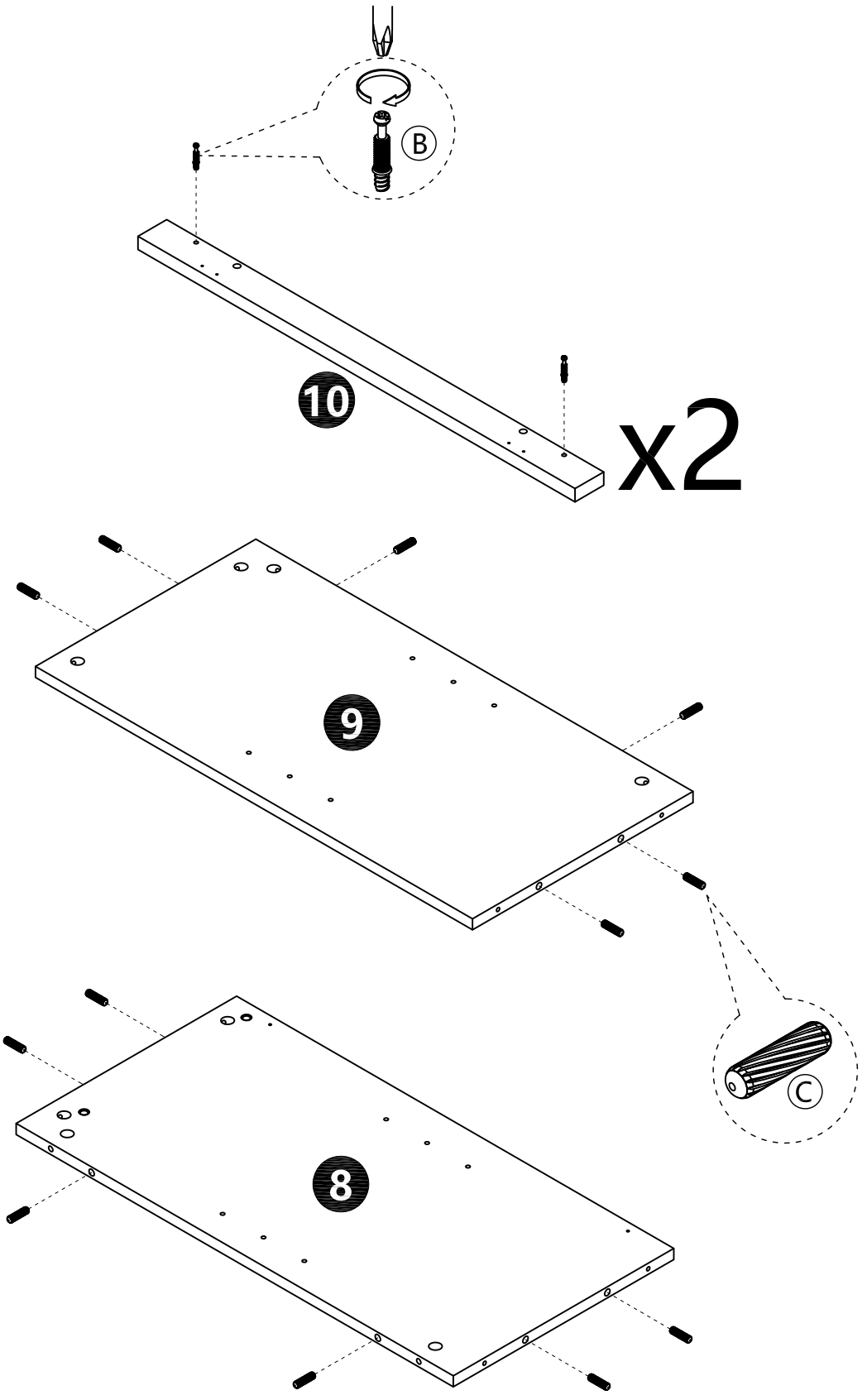

13

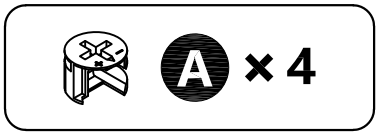

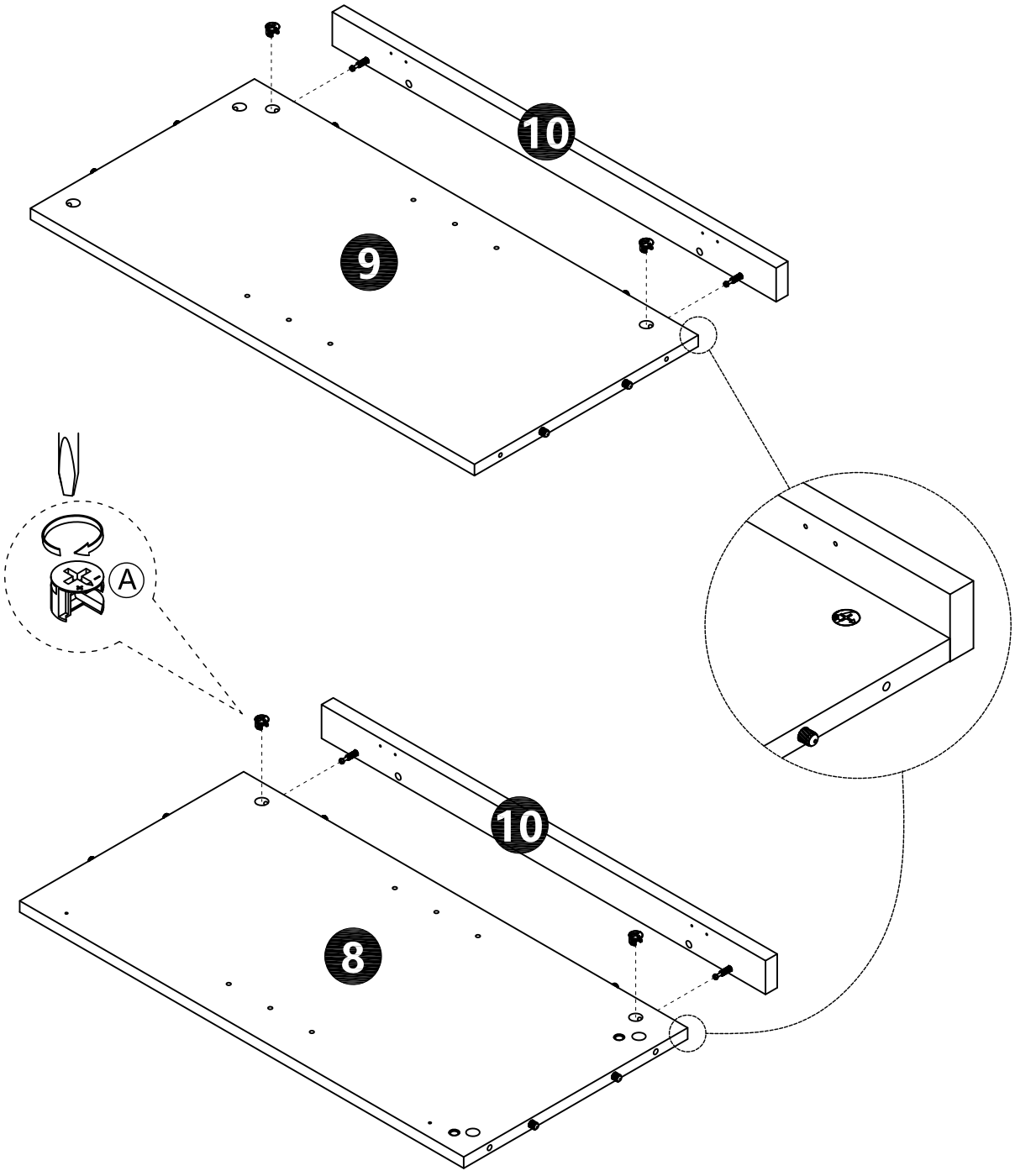

14

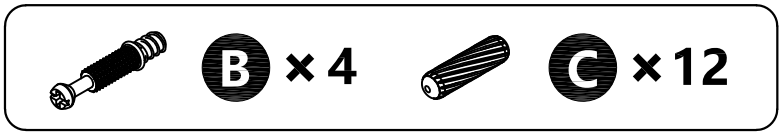

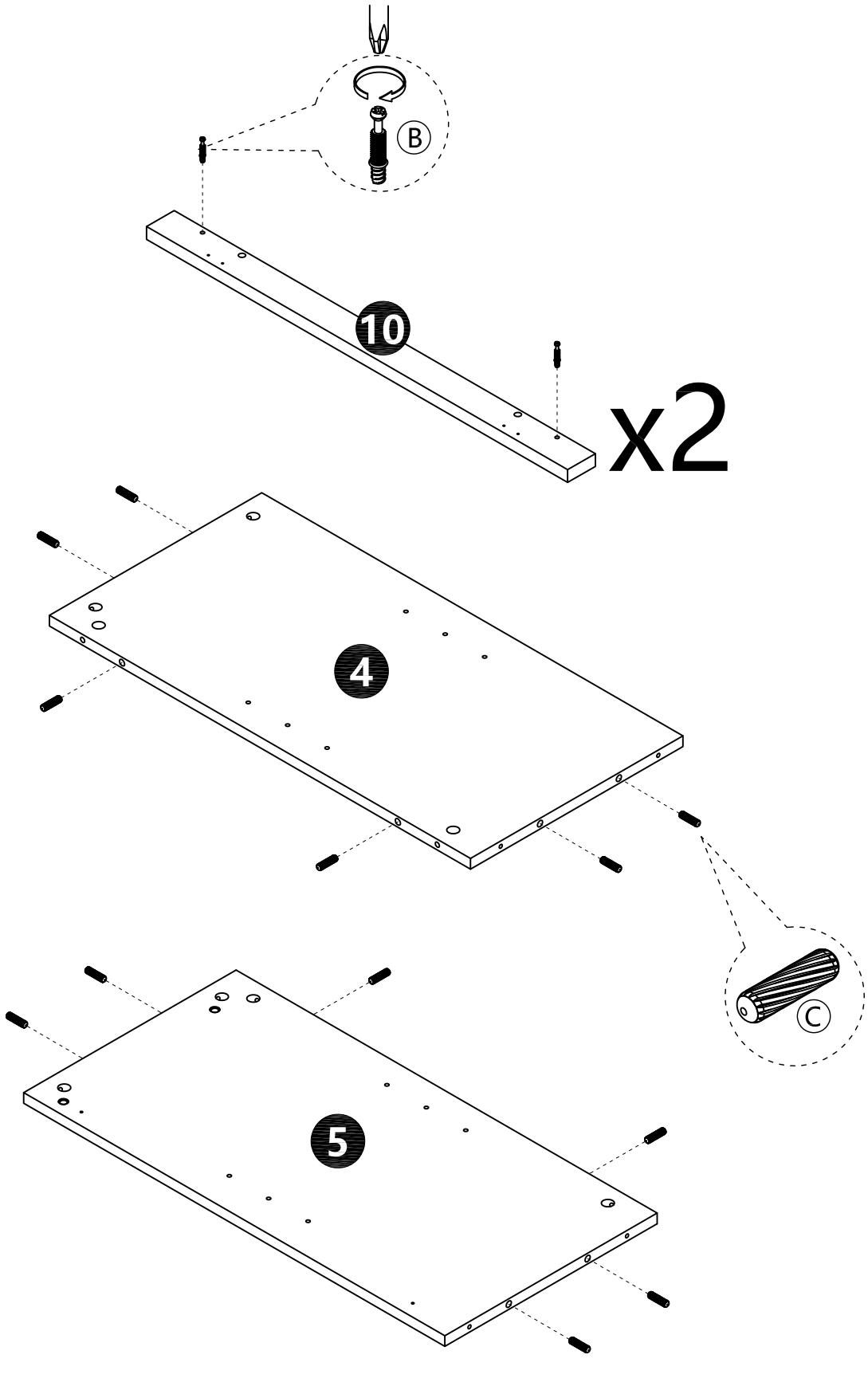

15

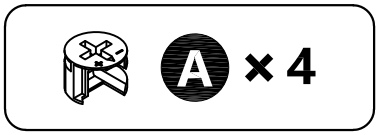

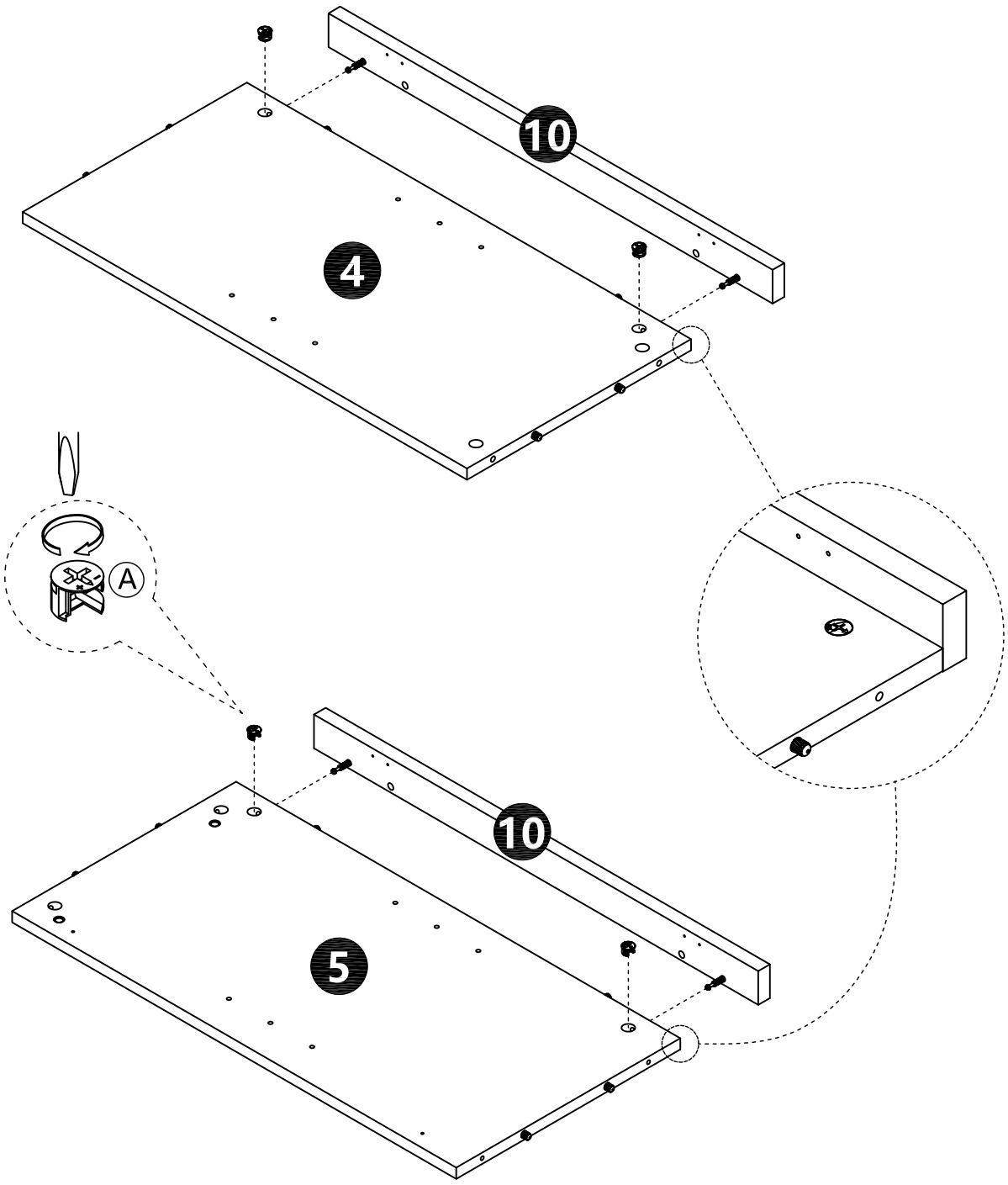

16

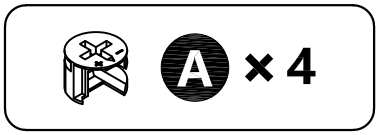

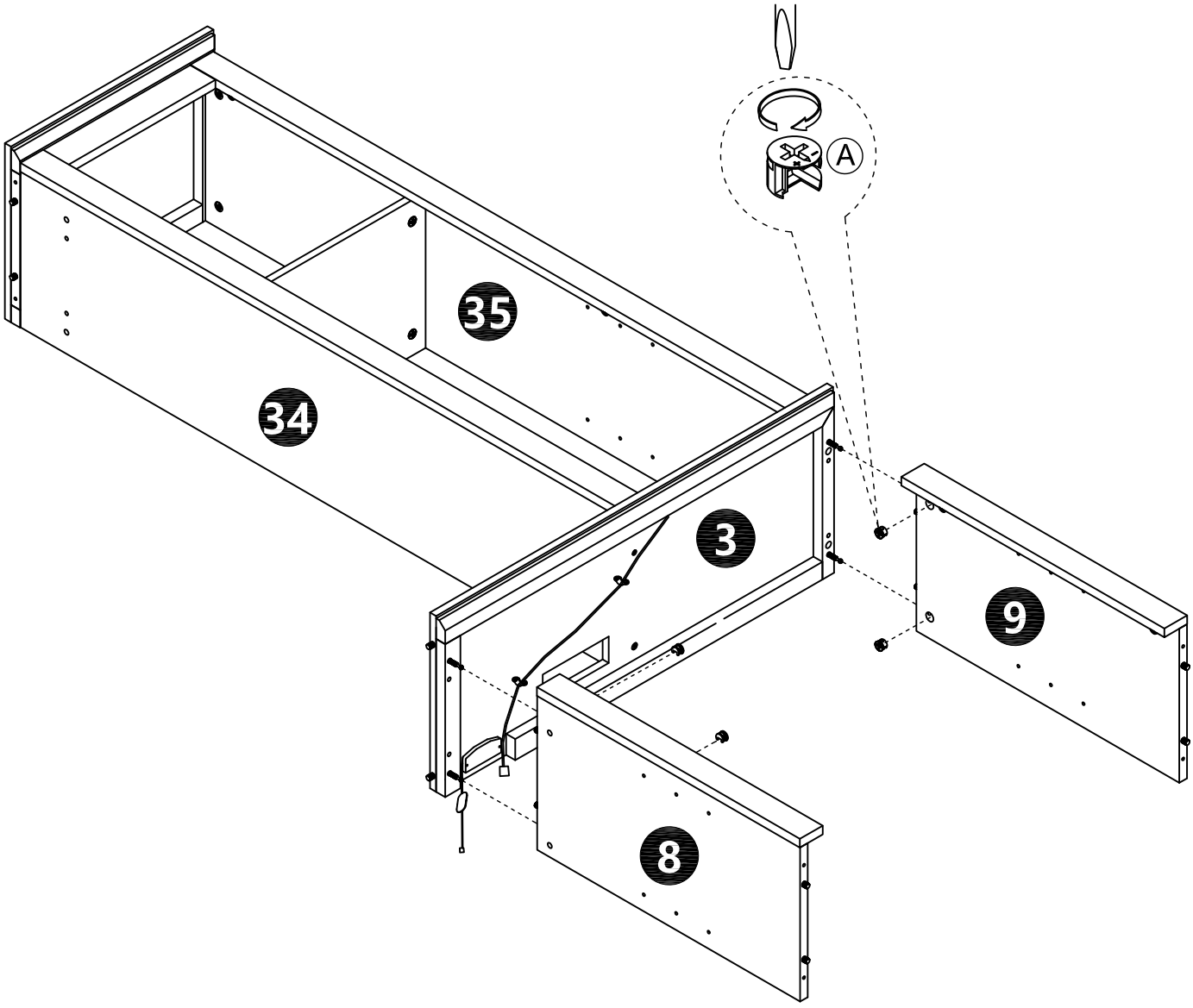

17

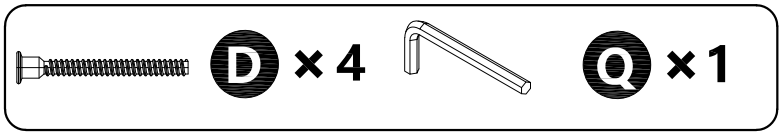

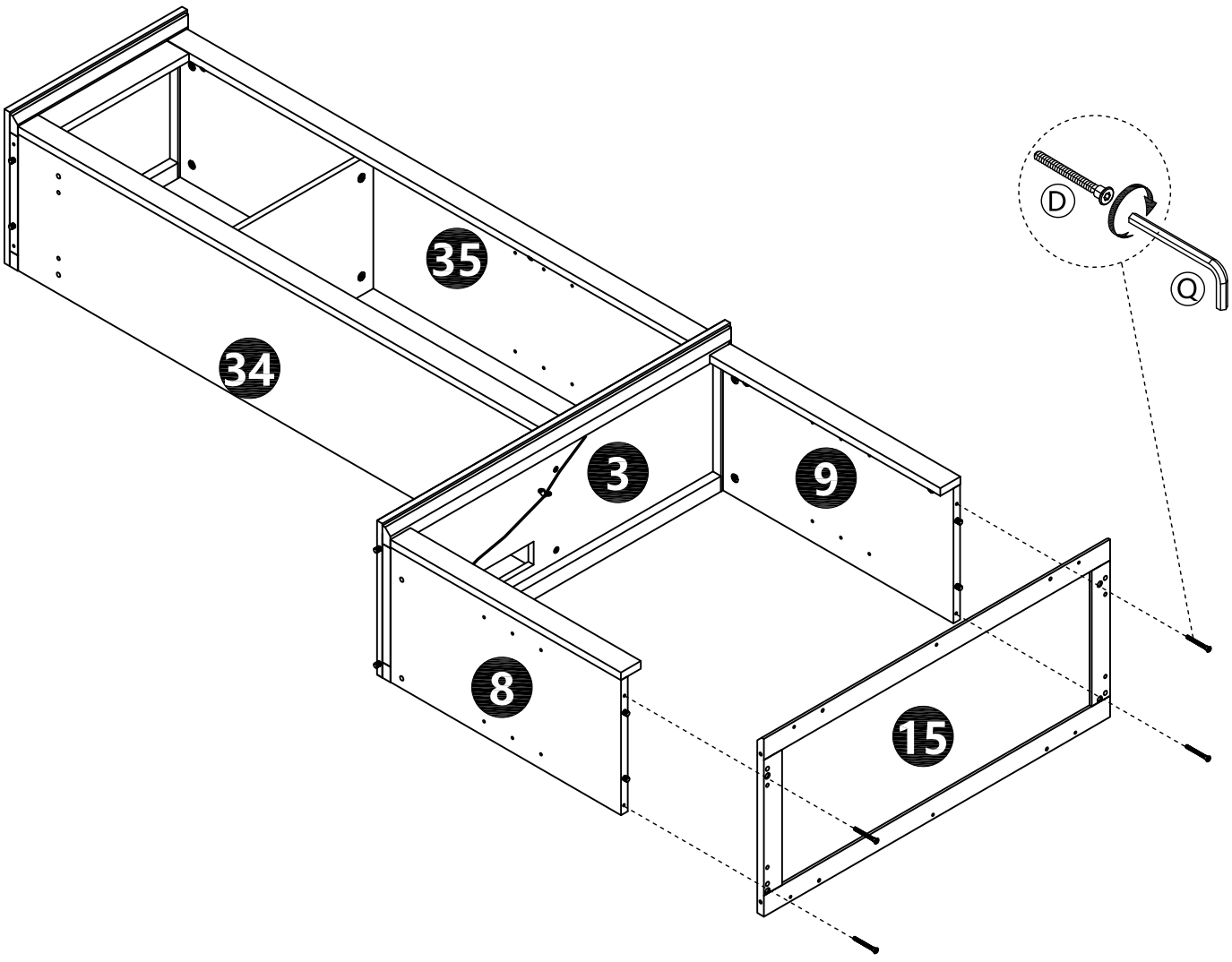

18

A × 4

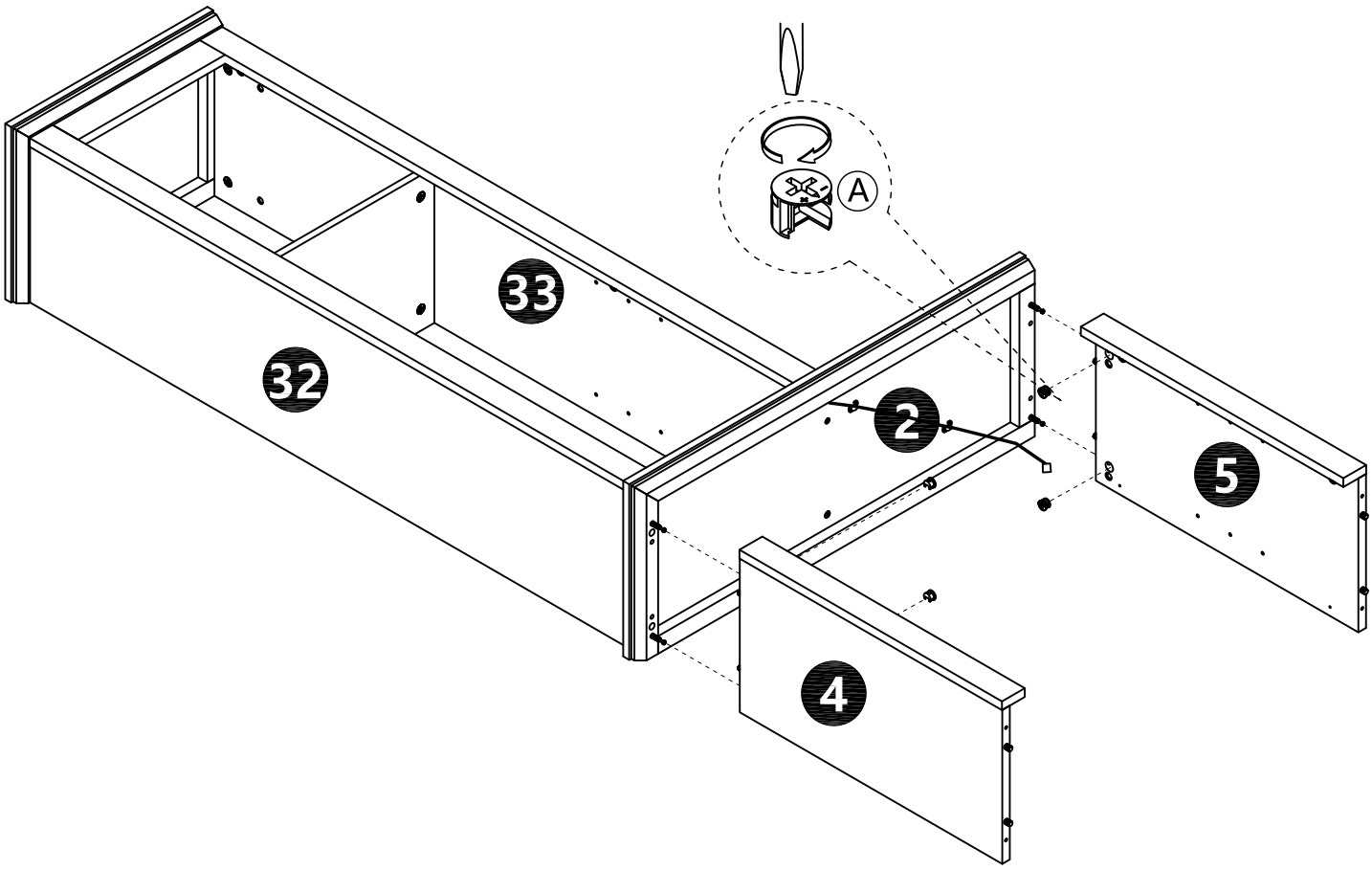

19

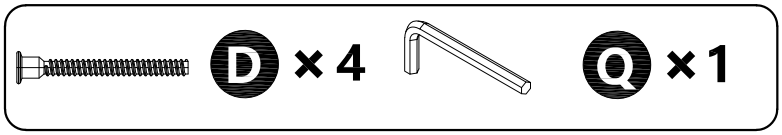

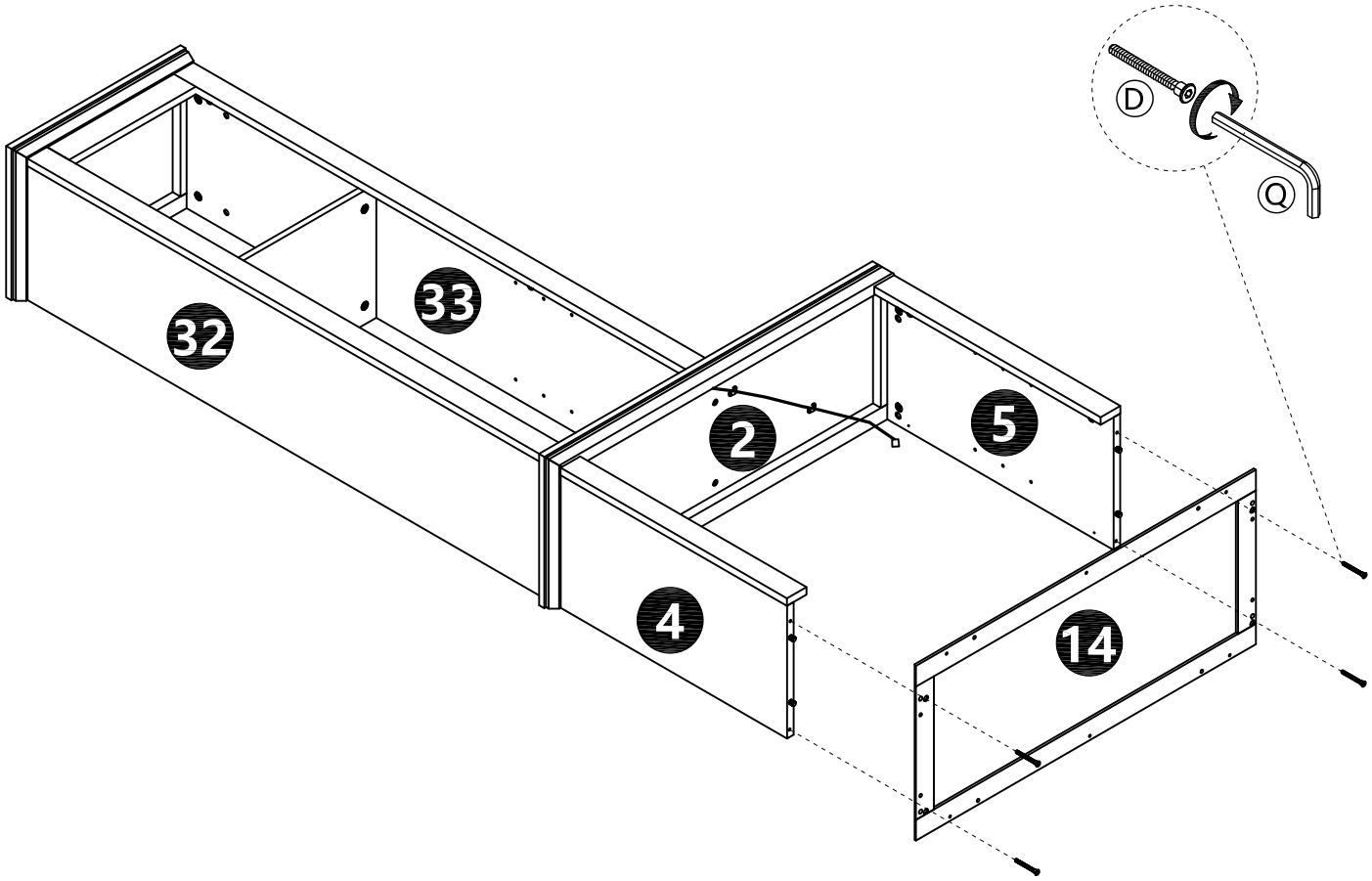

20

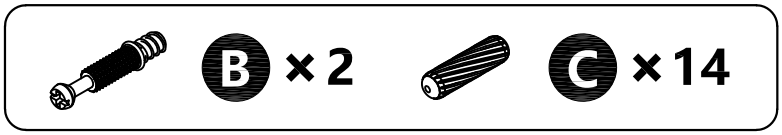

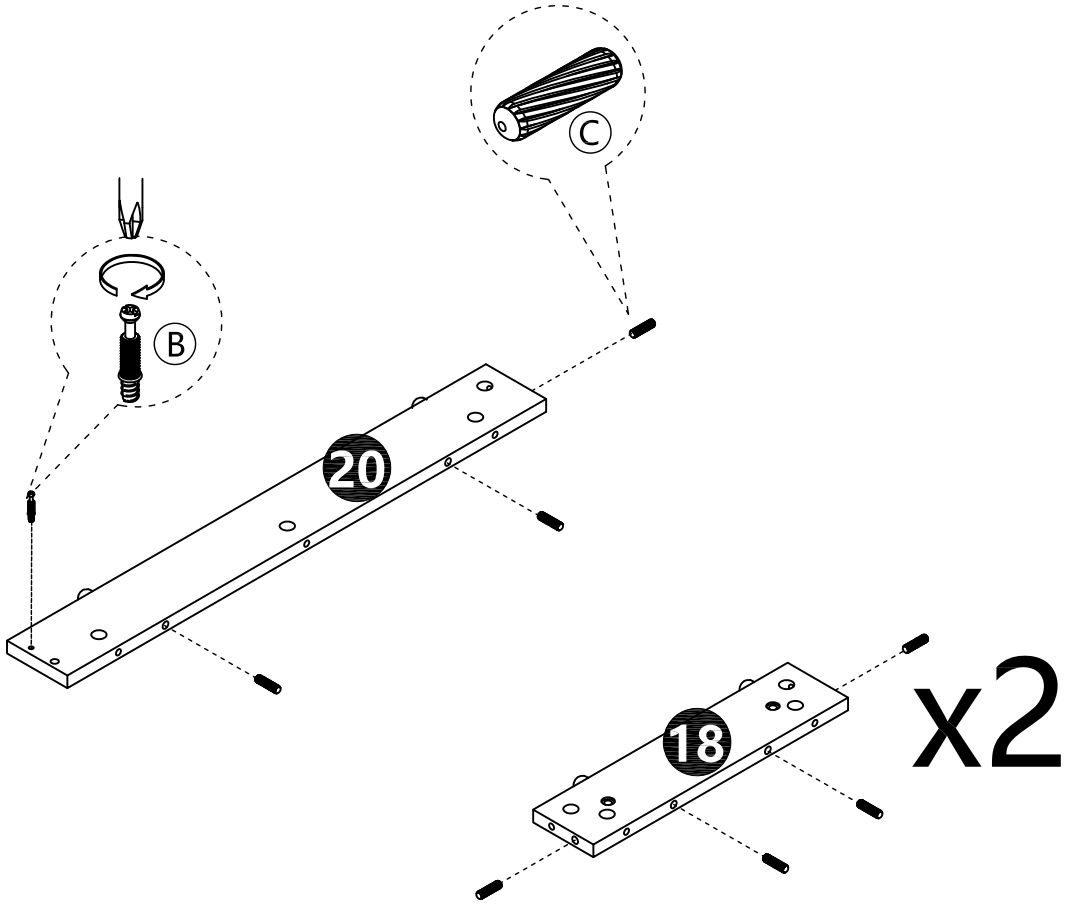

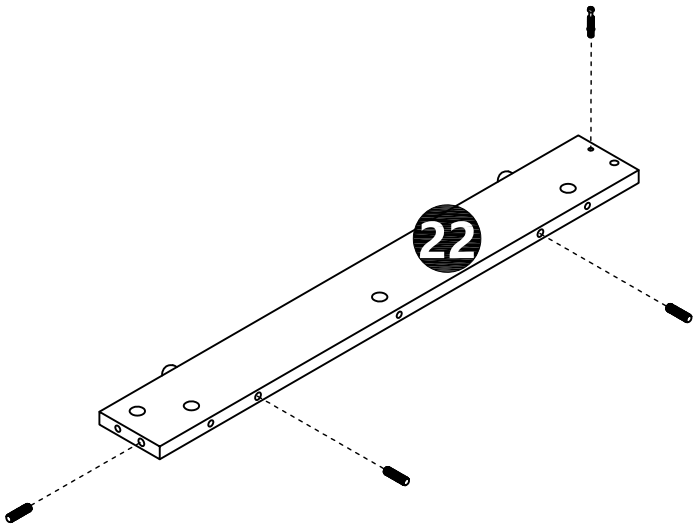

21

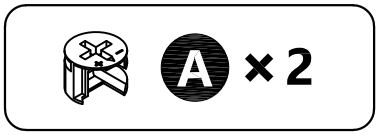

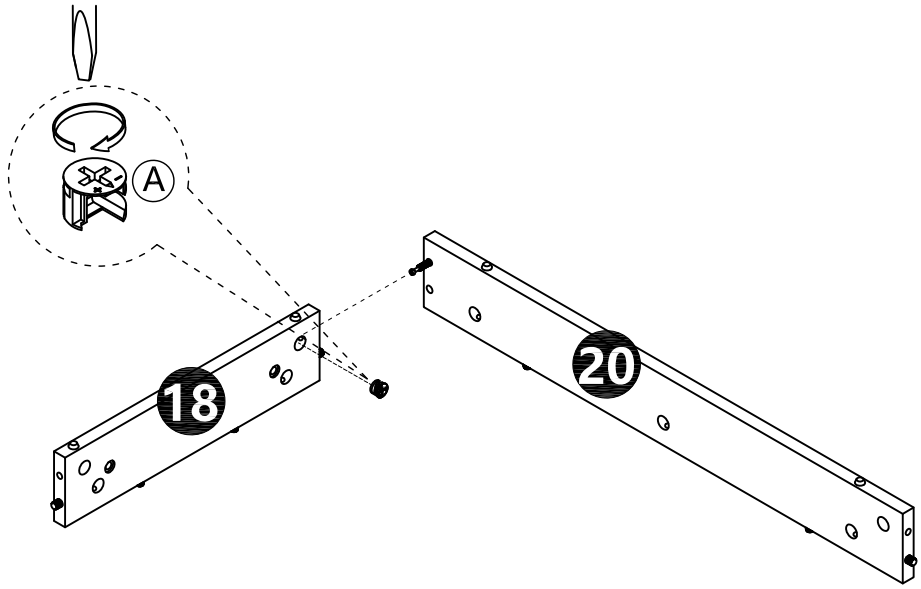

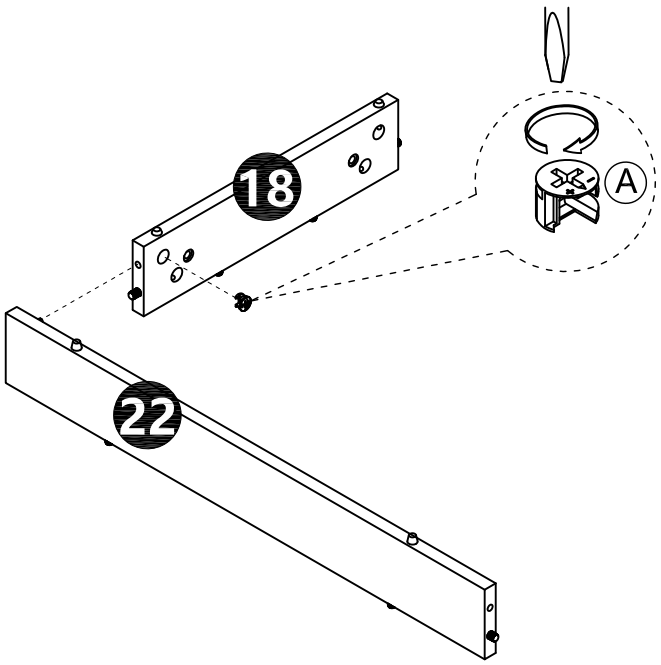

22

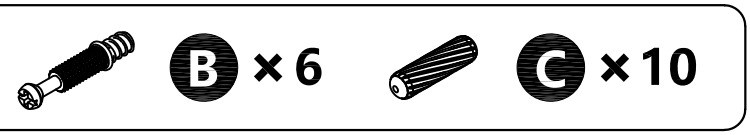

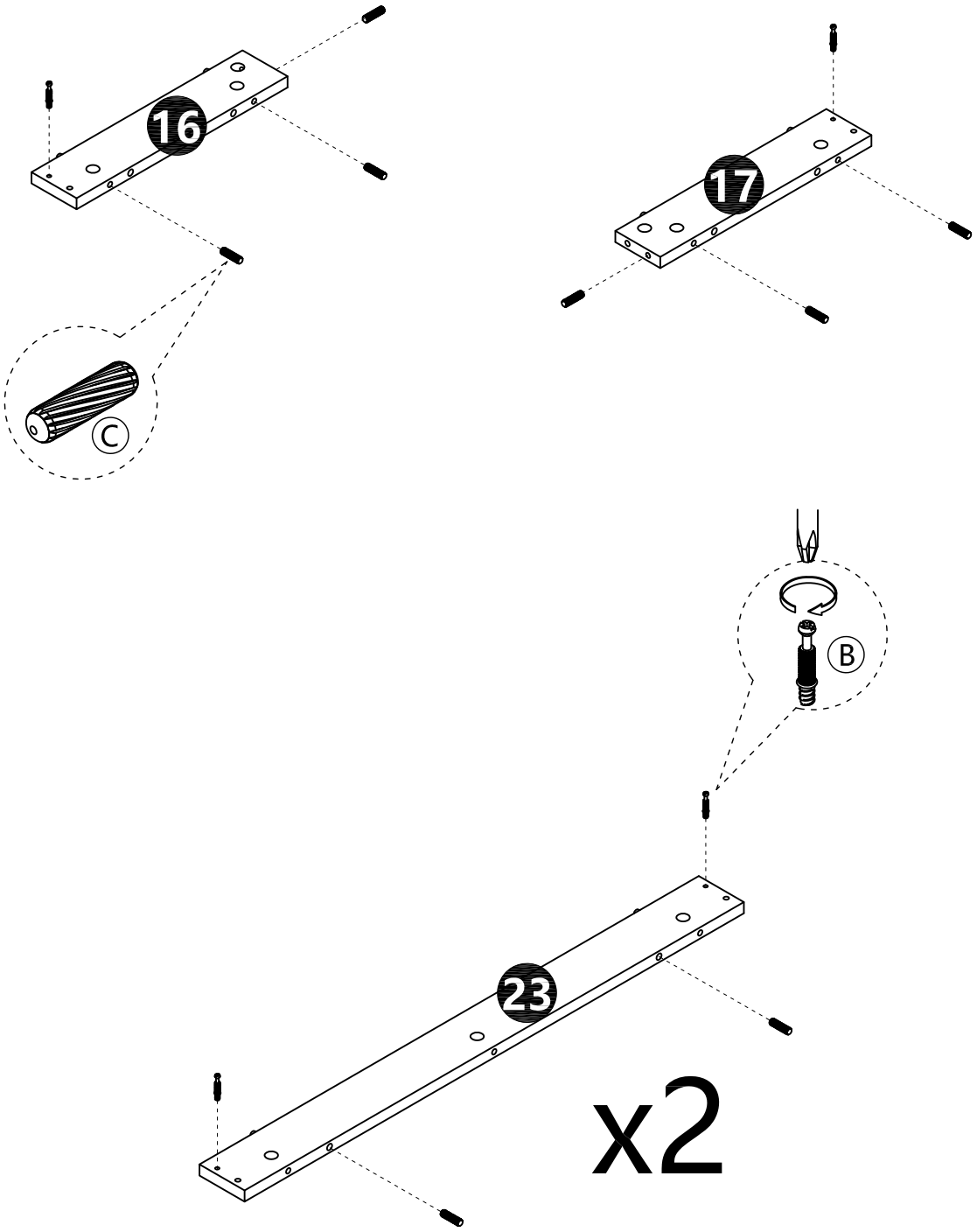

23

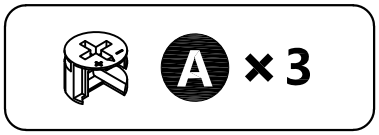

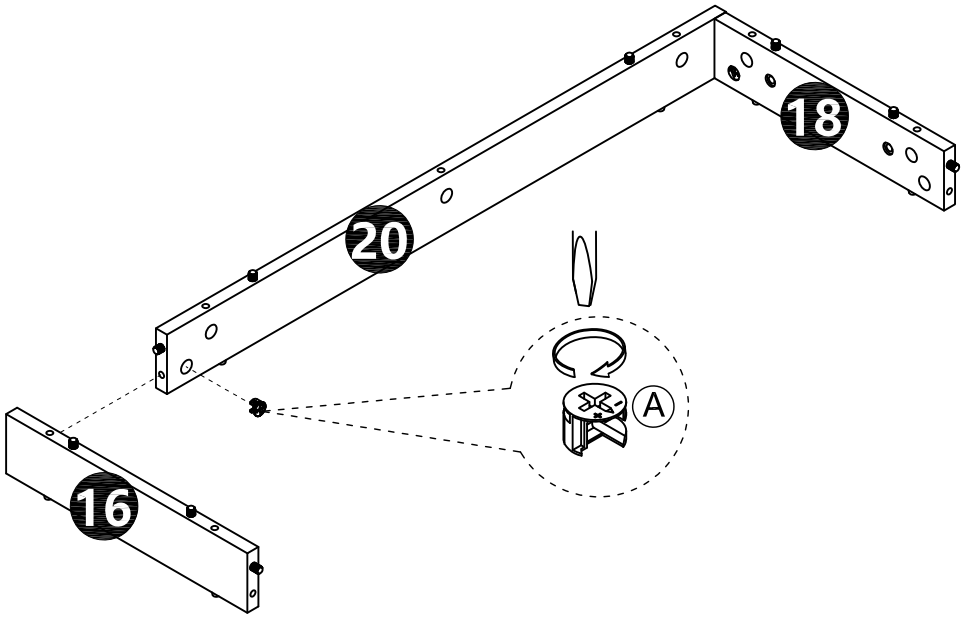

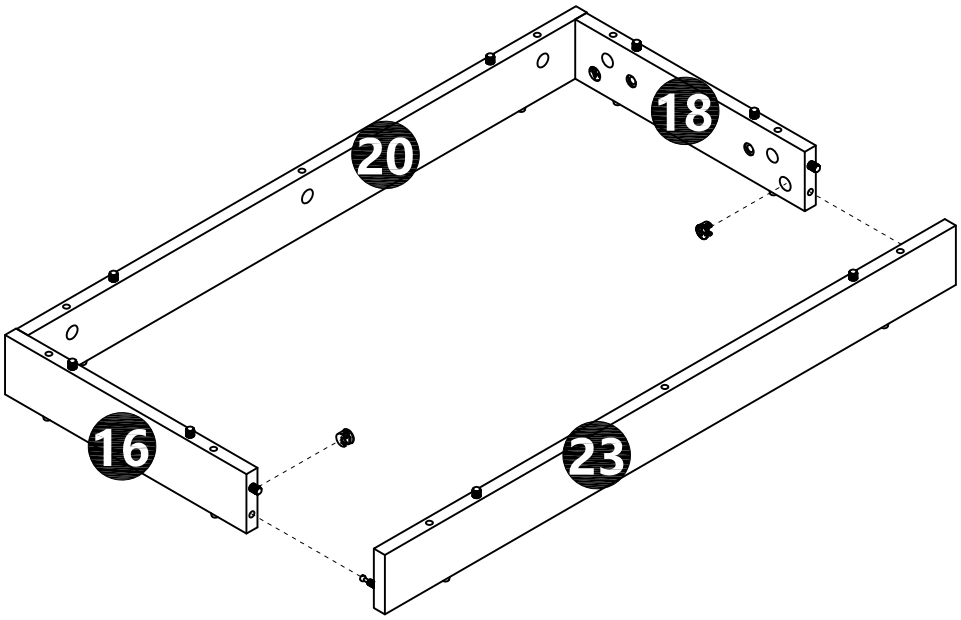

24

A × 3

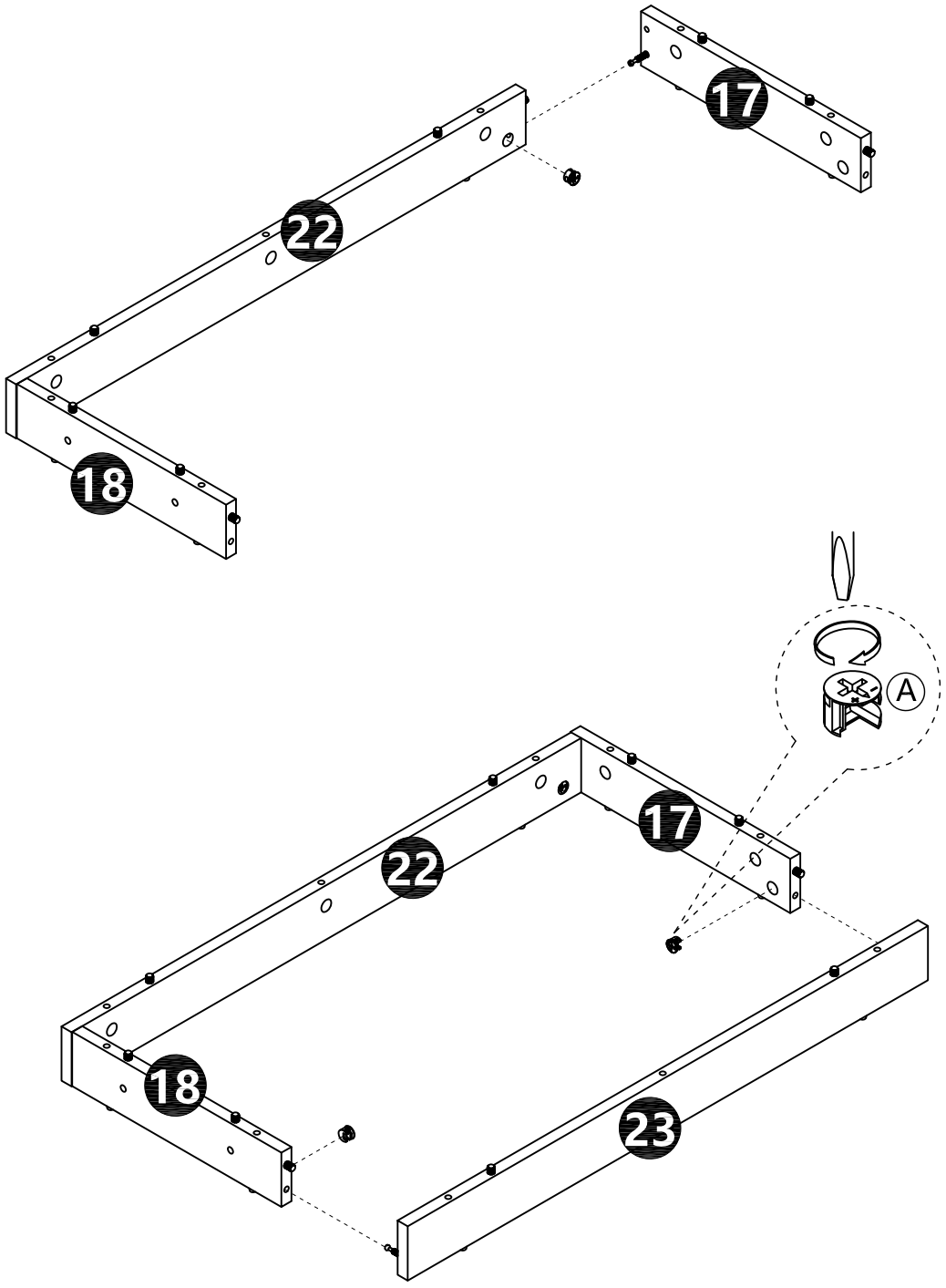

25

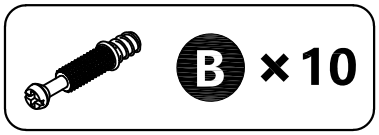

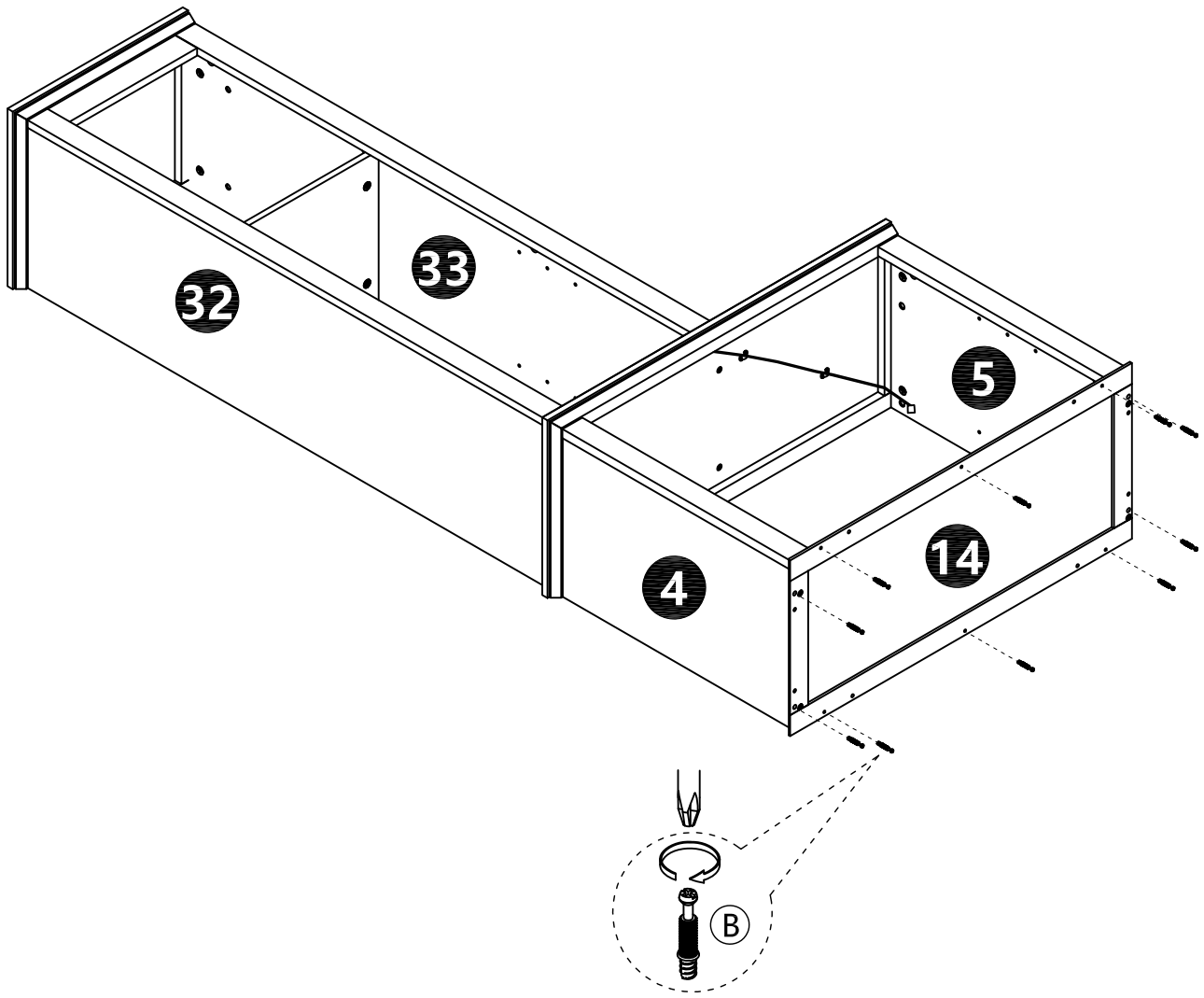

26

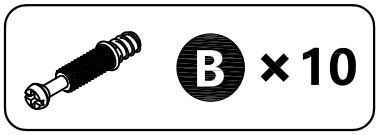

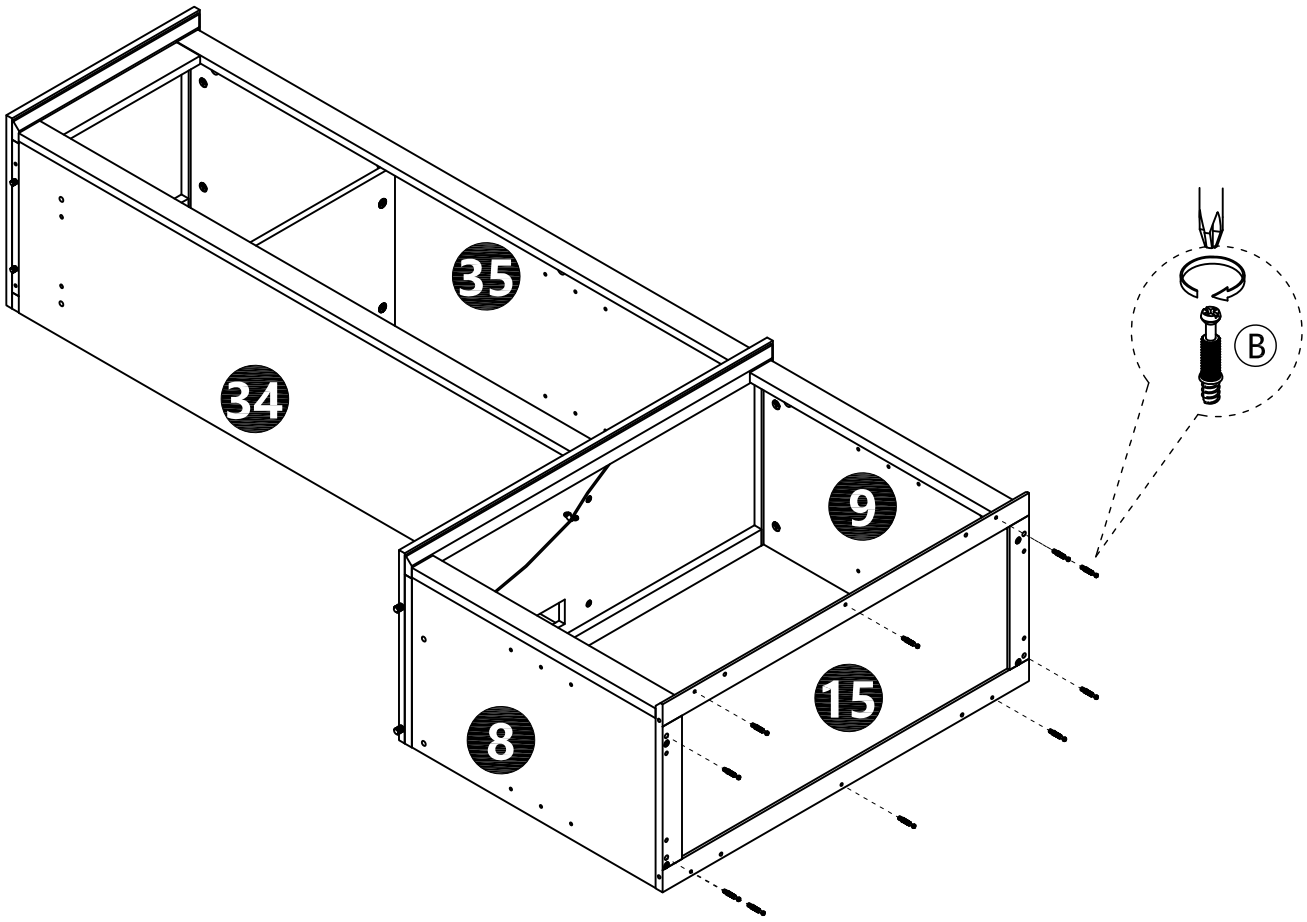

27

A ×10

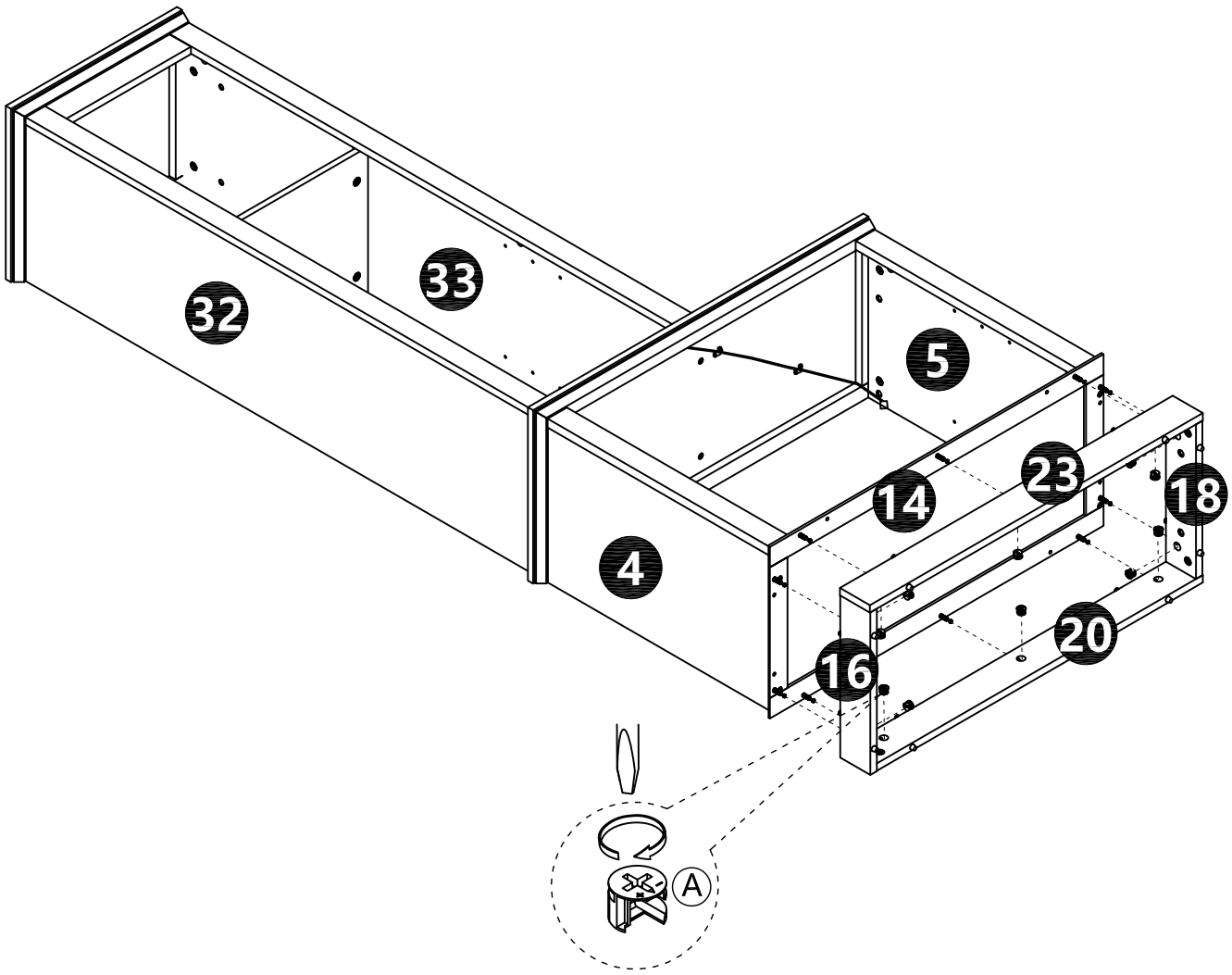

28

A ×10

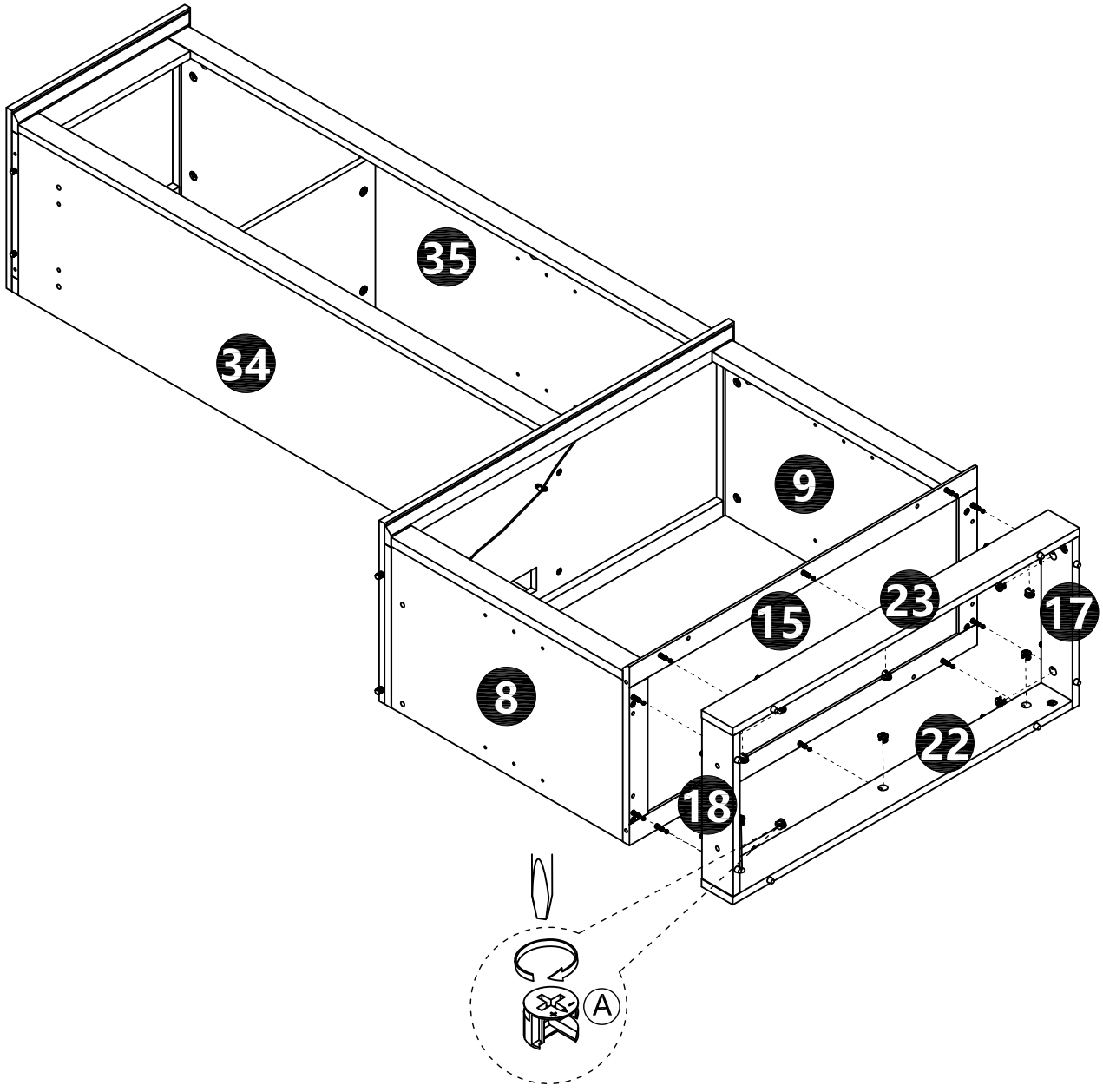

29

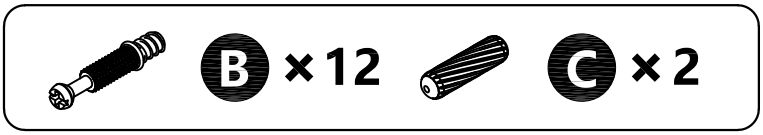

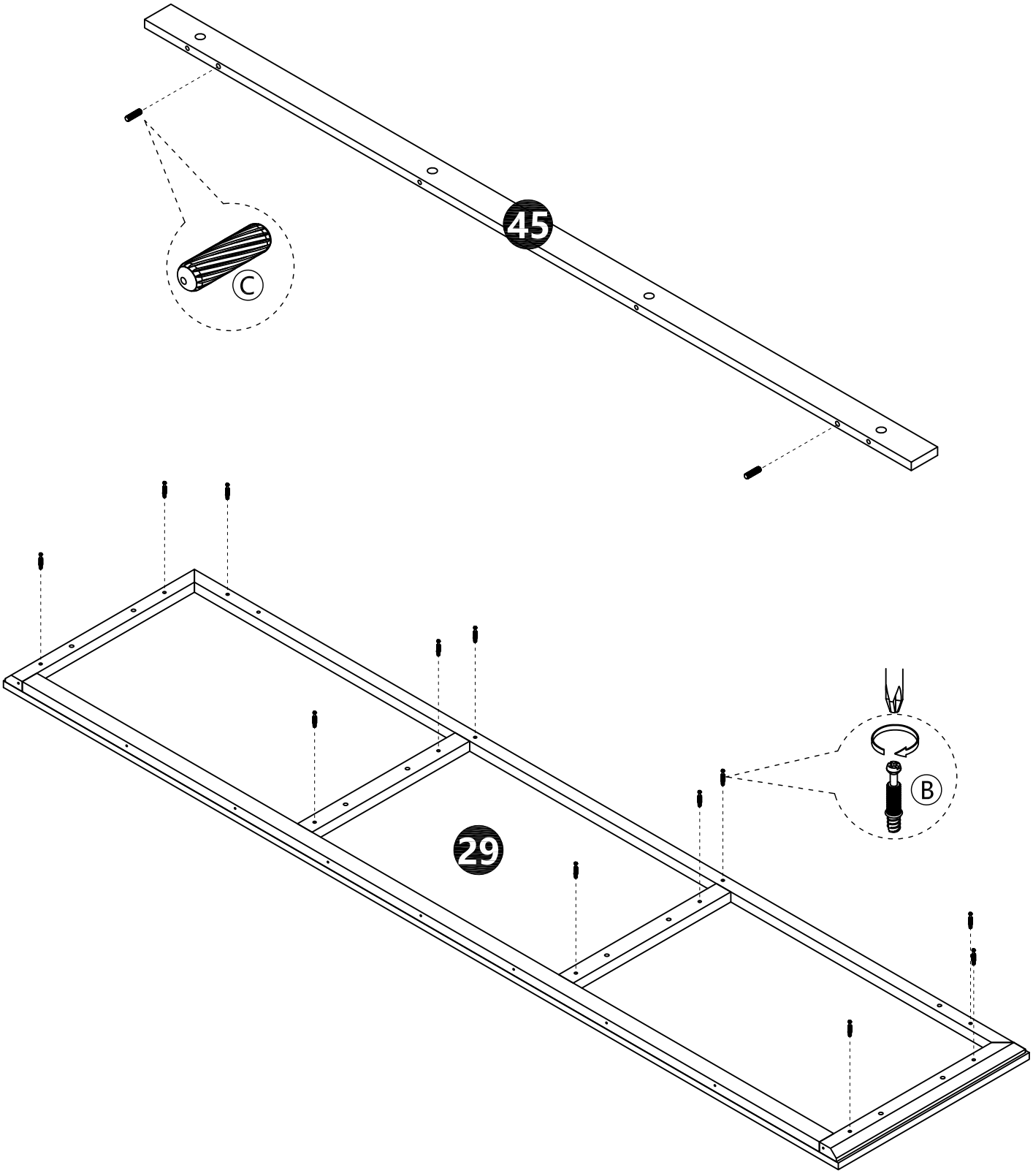

30

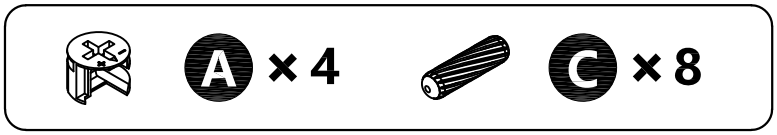

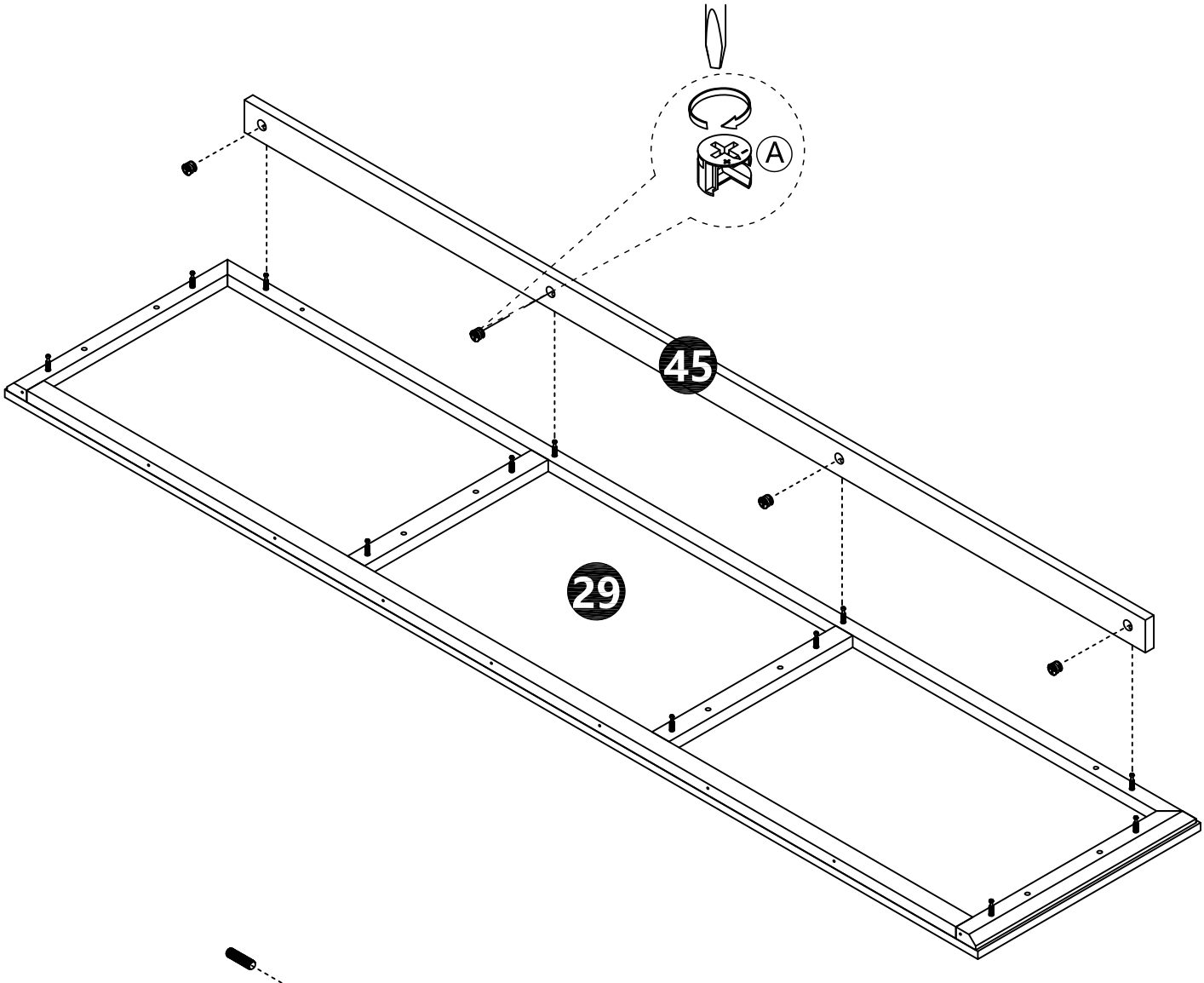

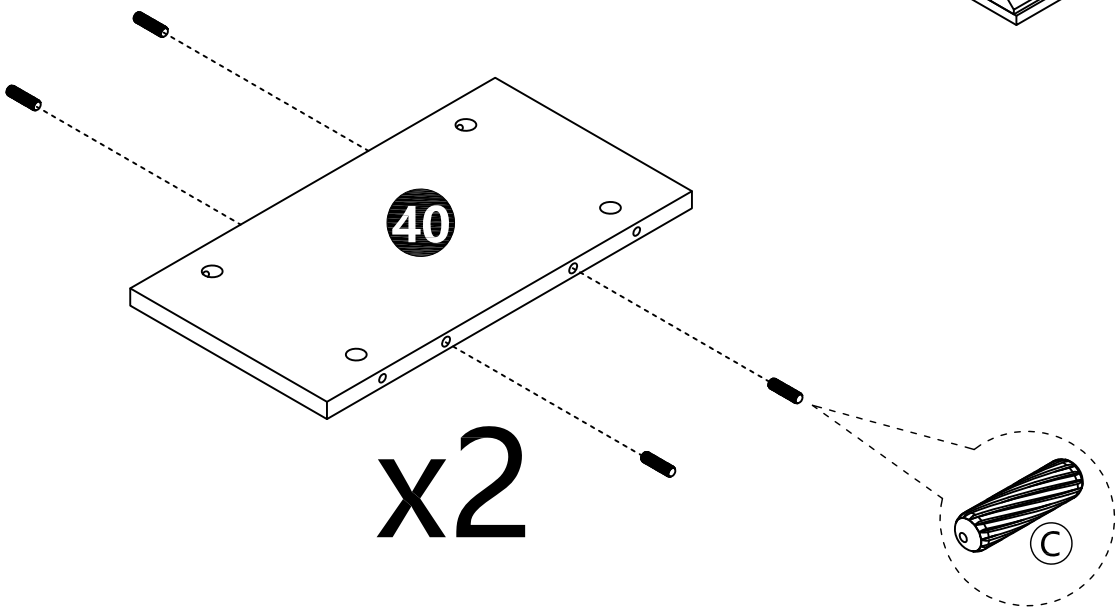

31

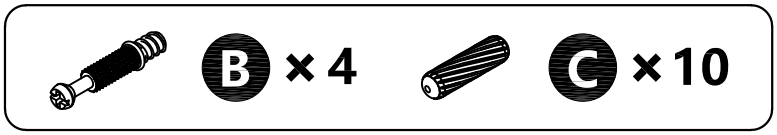

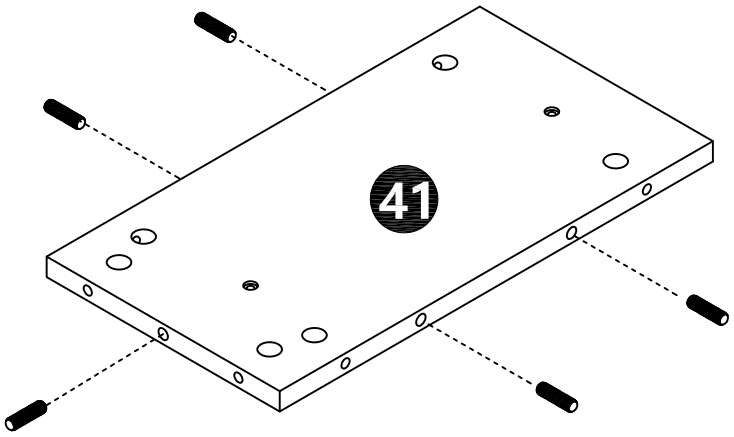

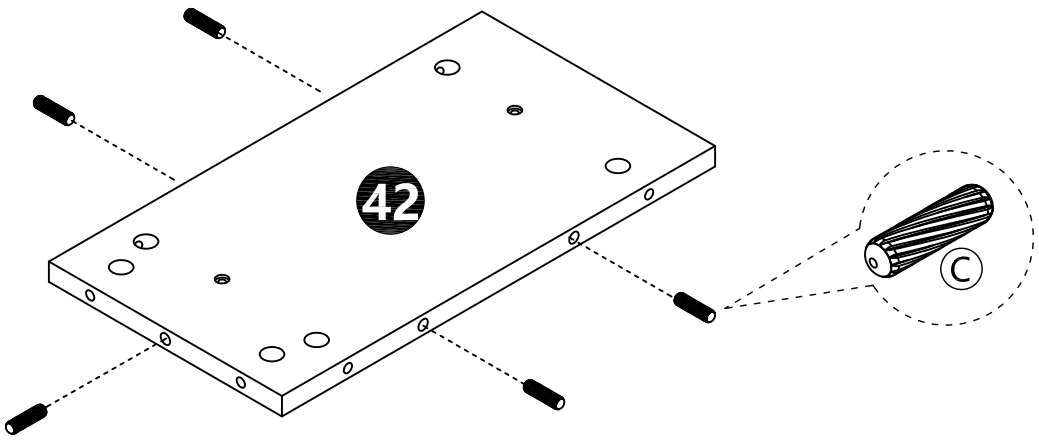

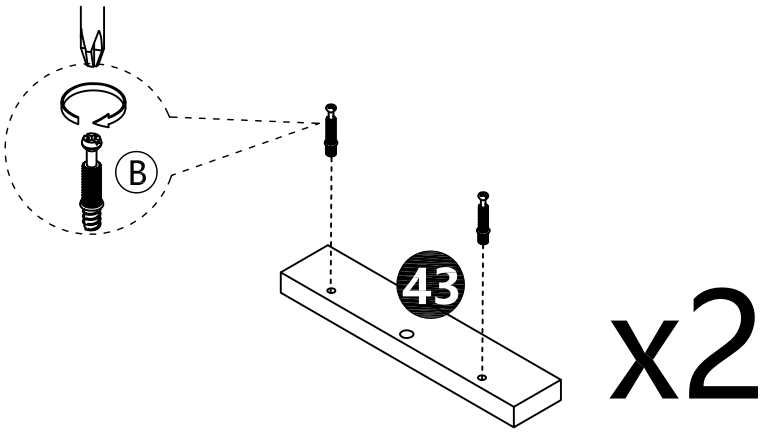

32

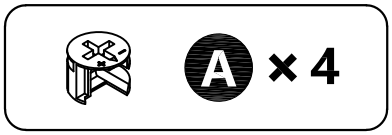

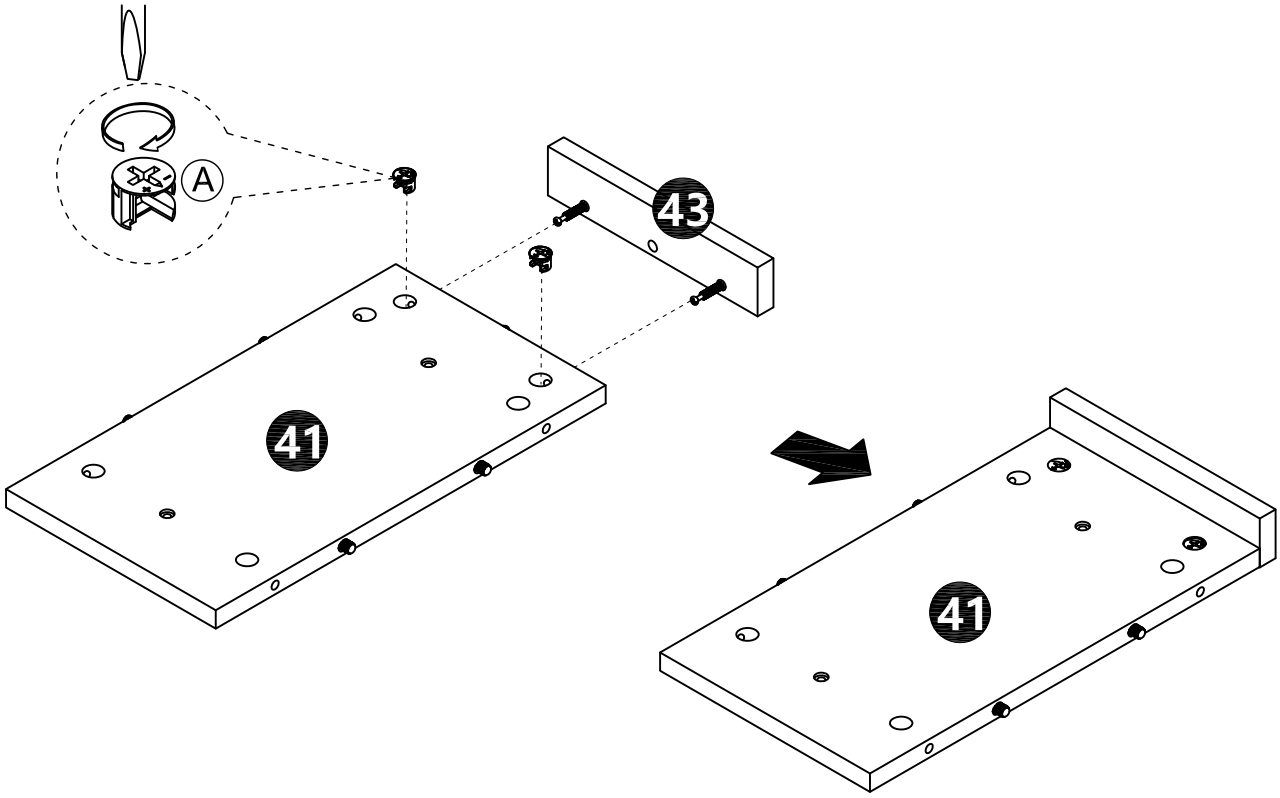

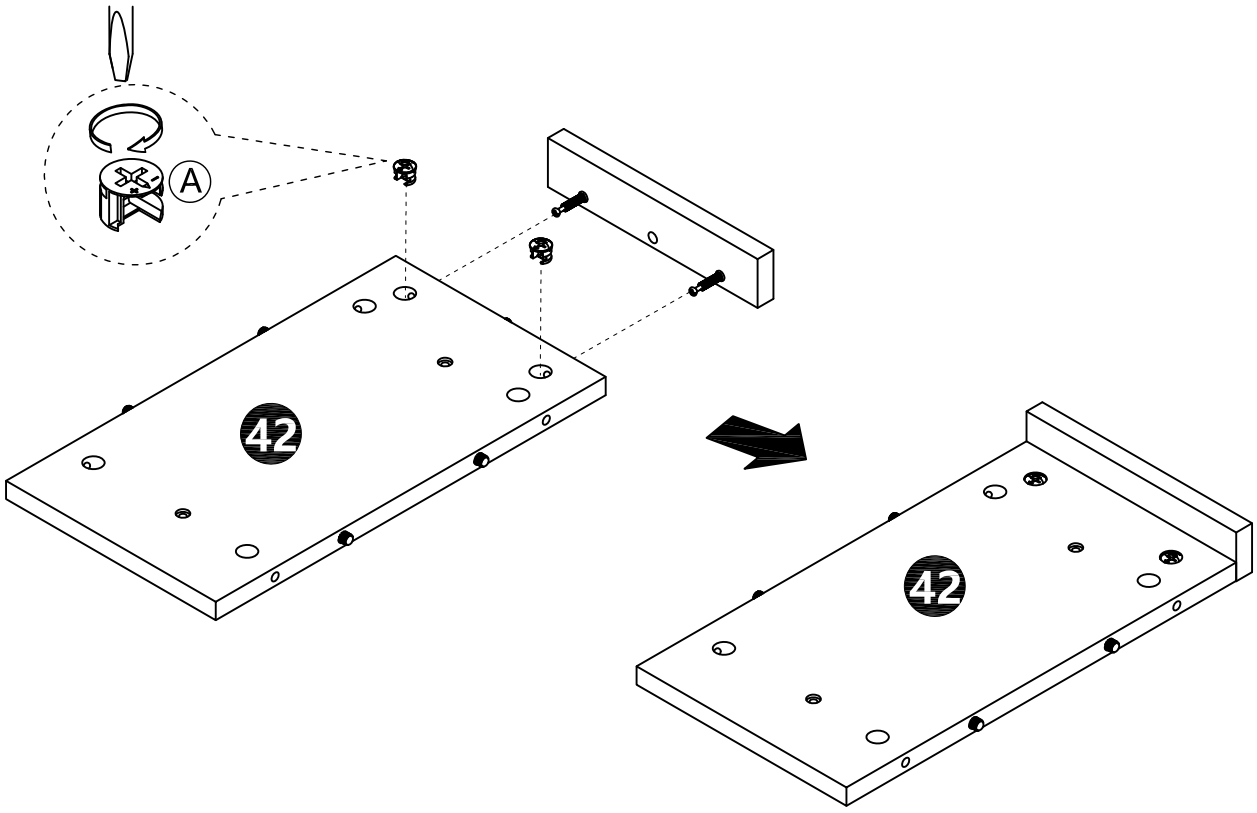

33

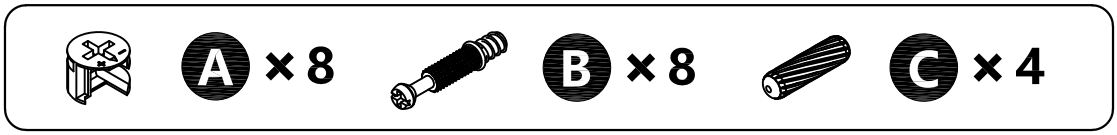

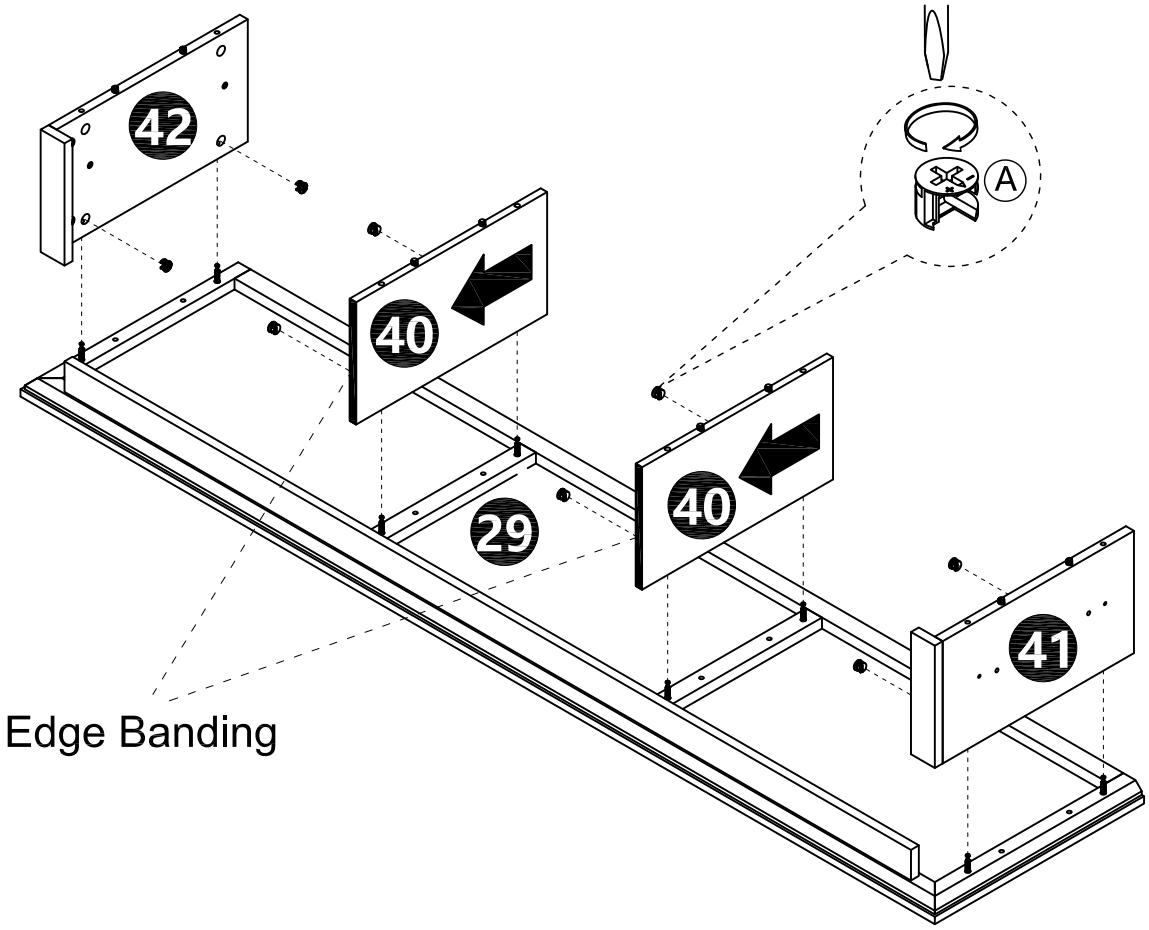

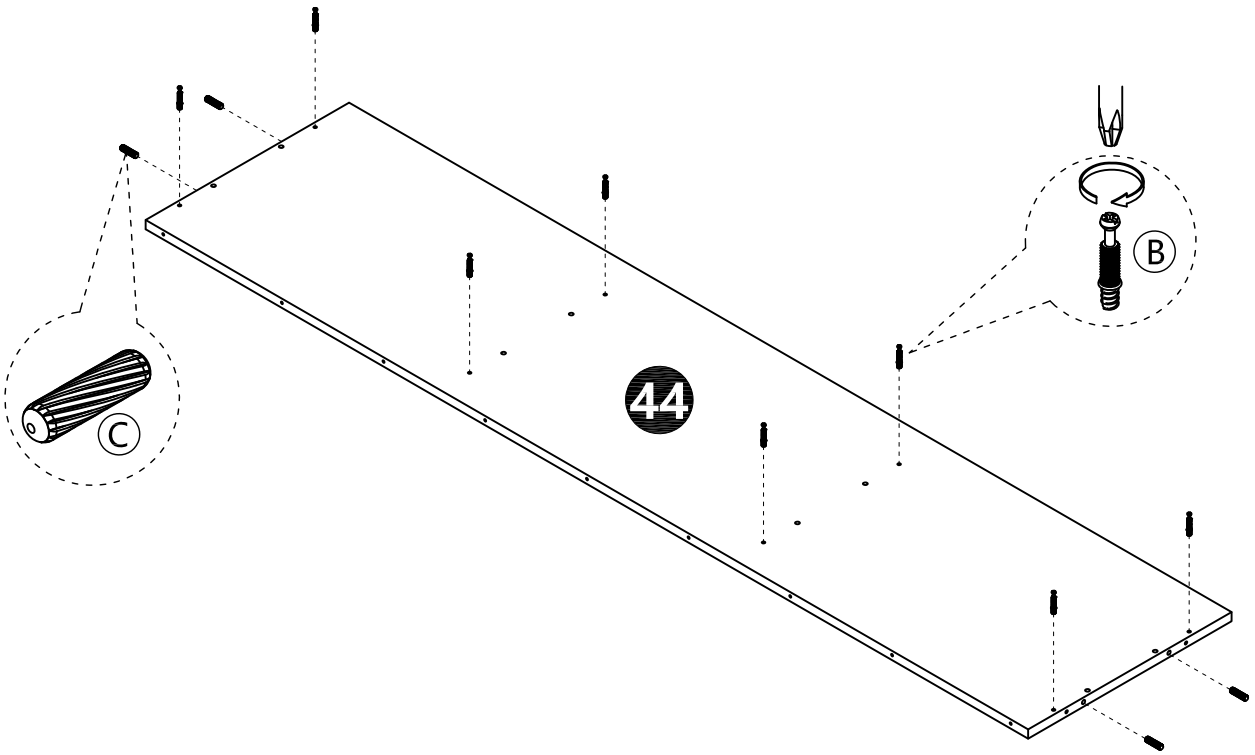

34

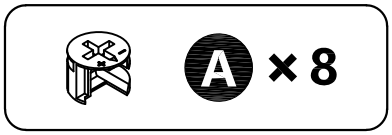

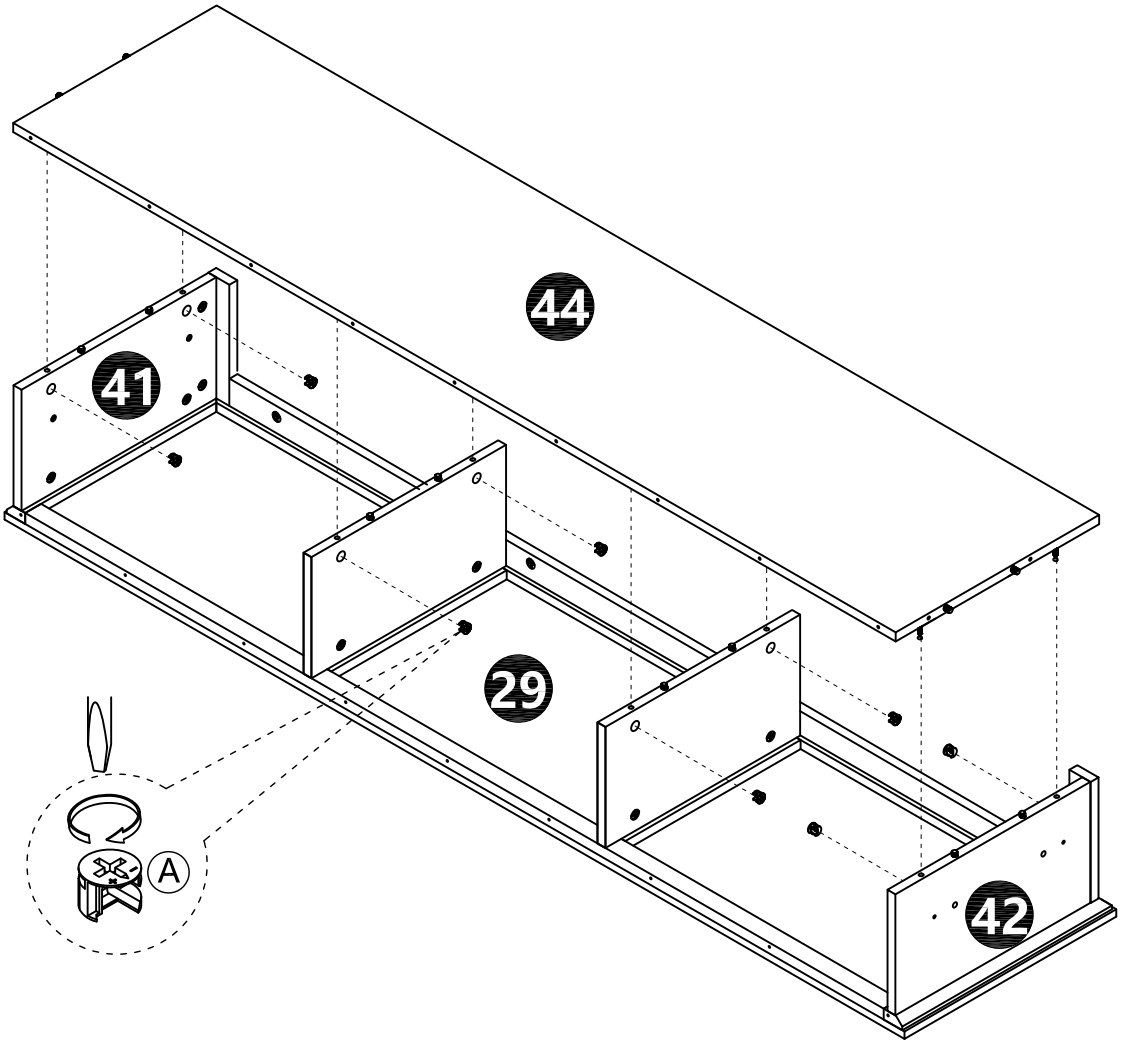

35

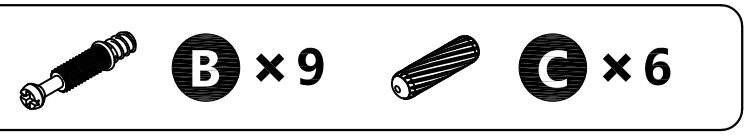

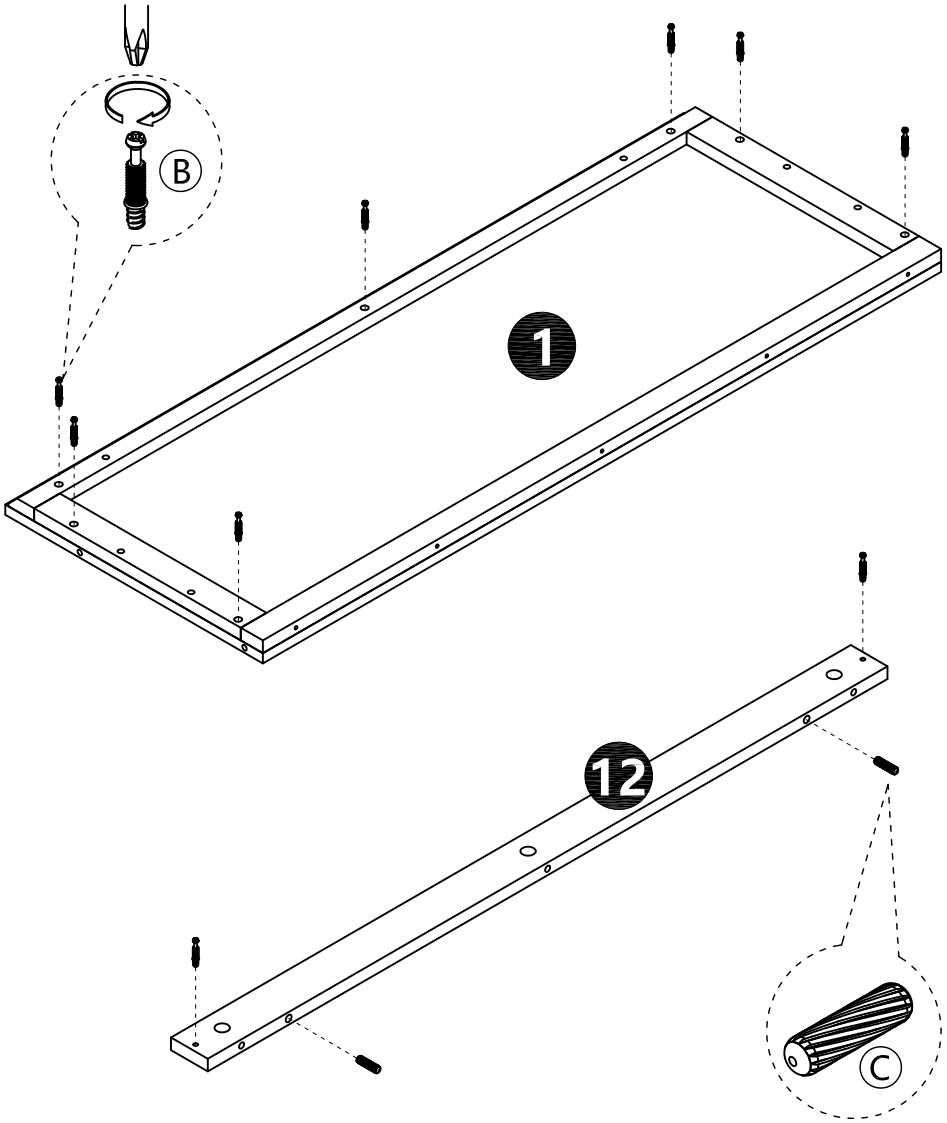



36

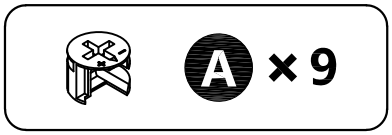

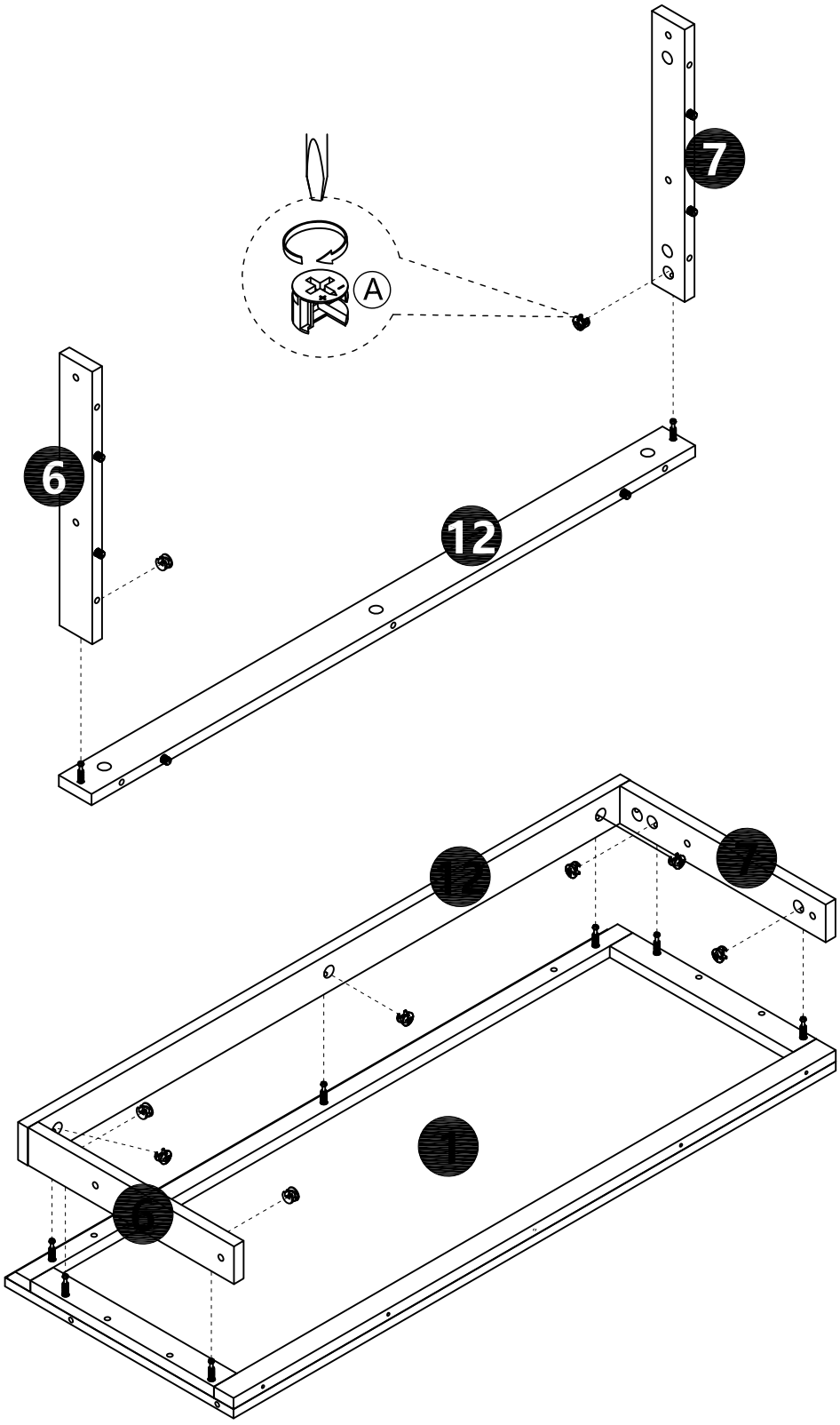

37

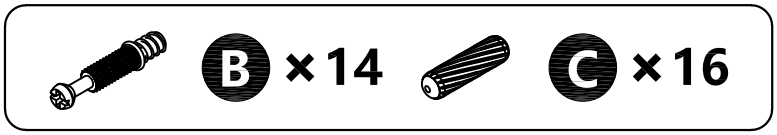

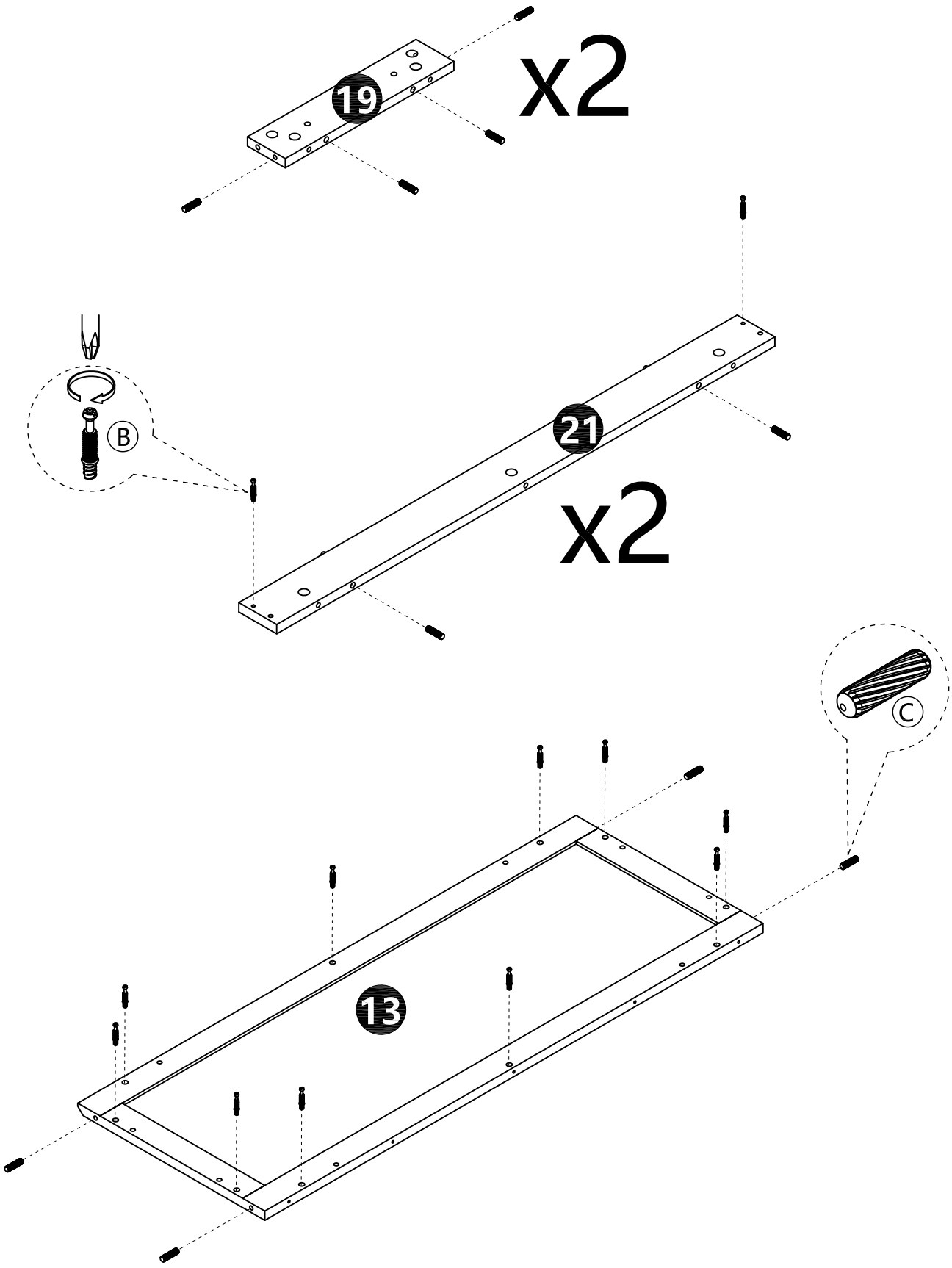

38

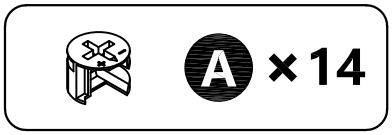

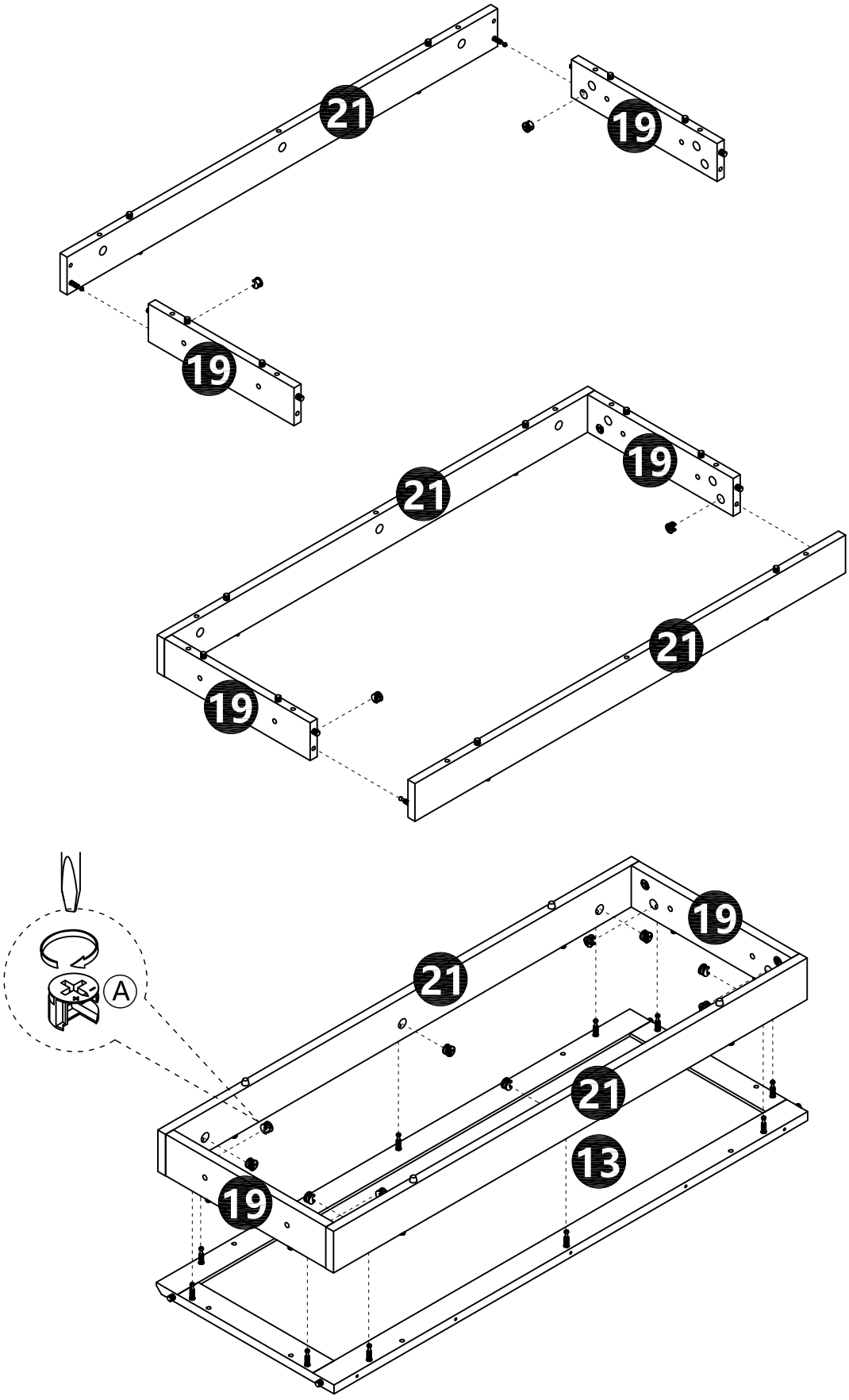

39

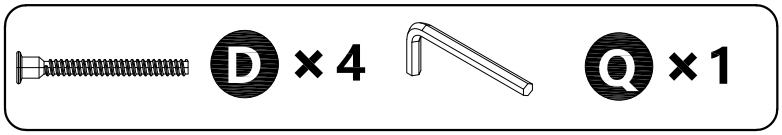

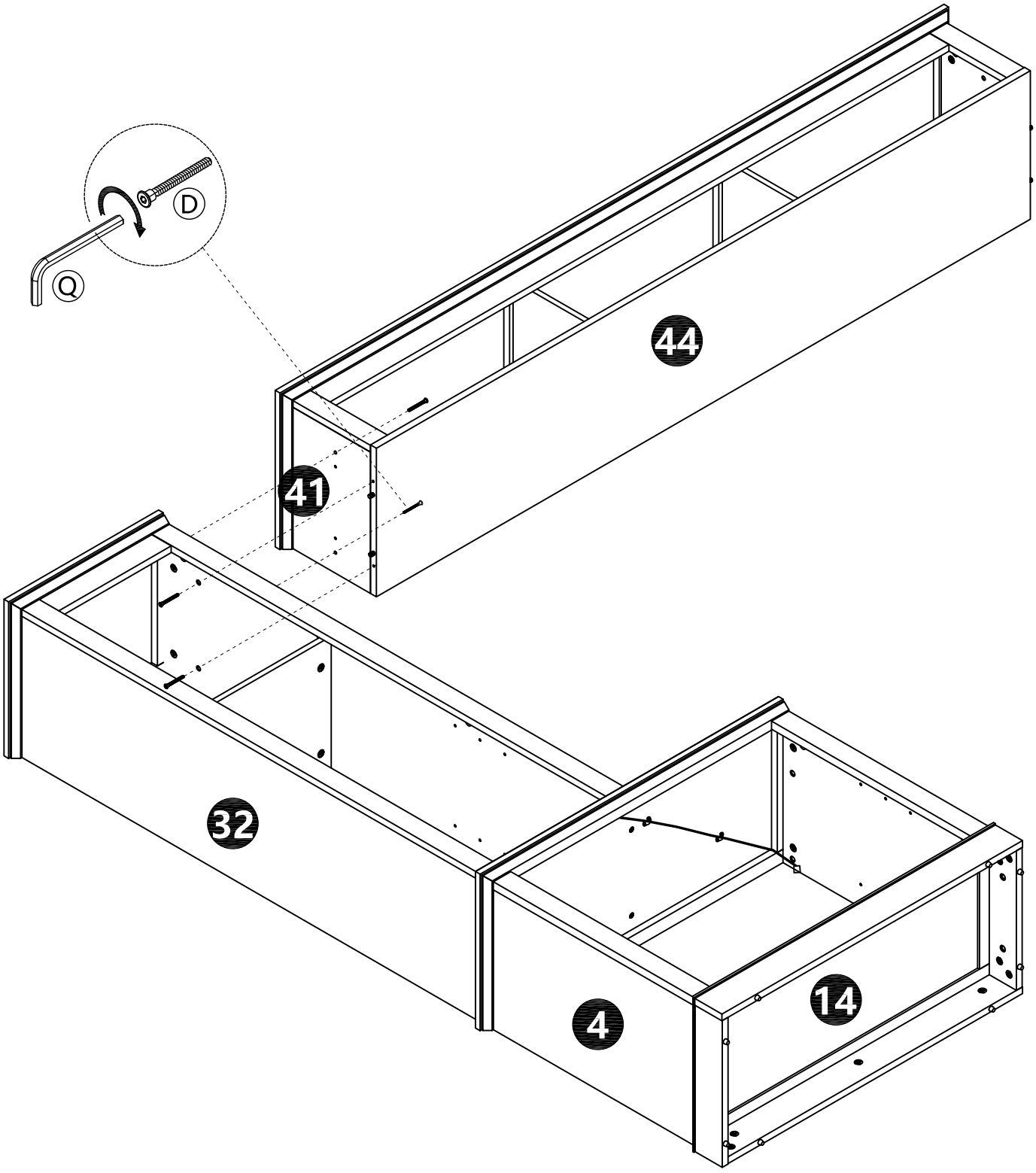

40

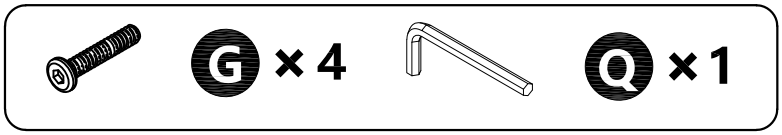

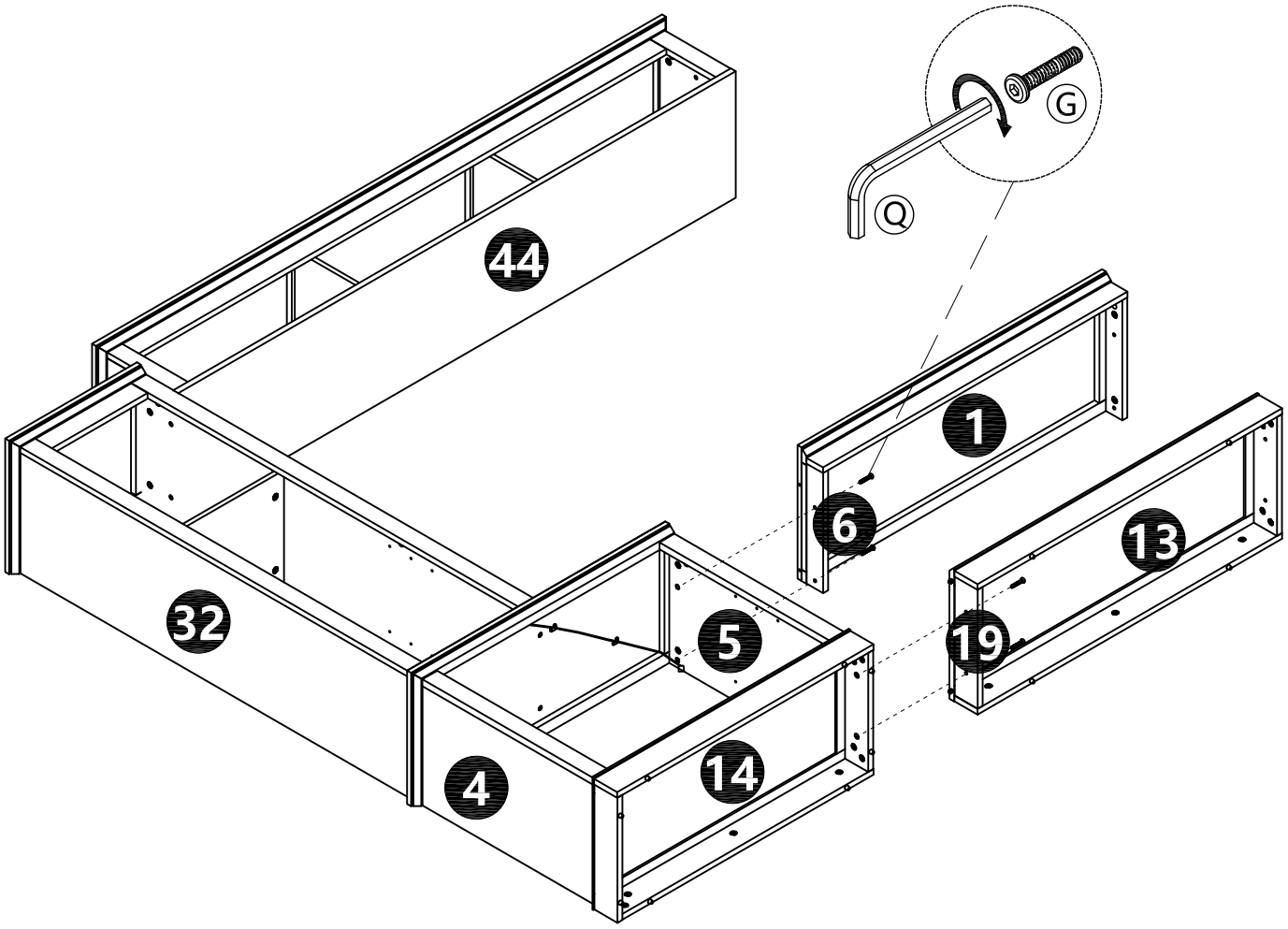

41



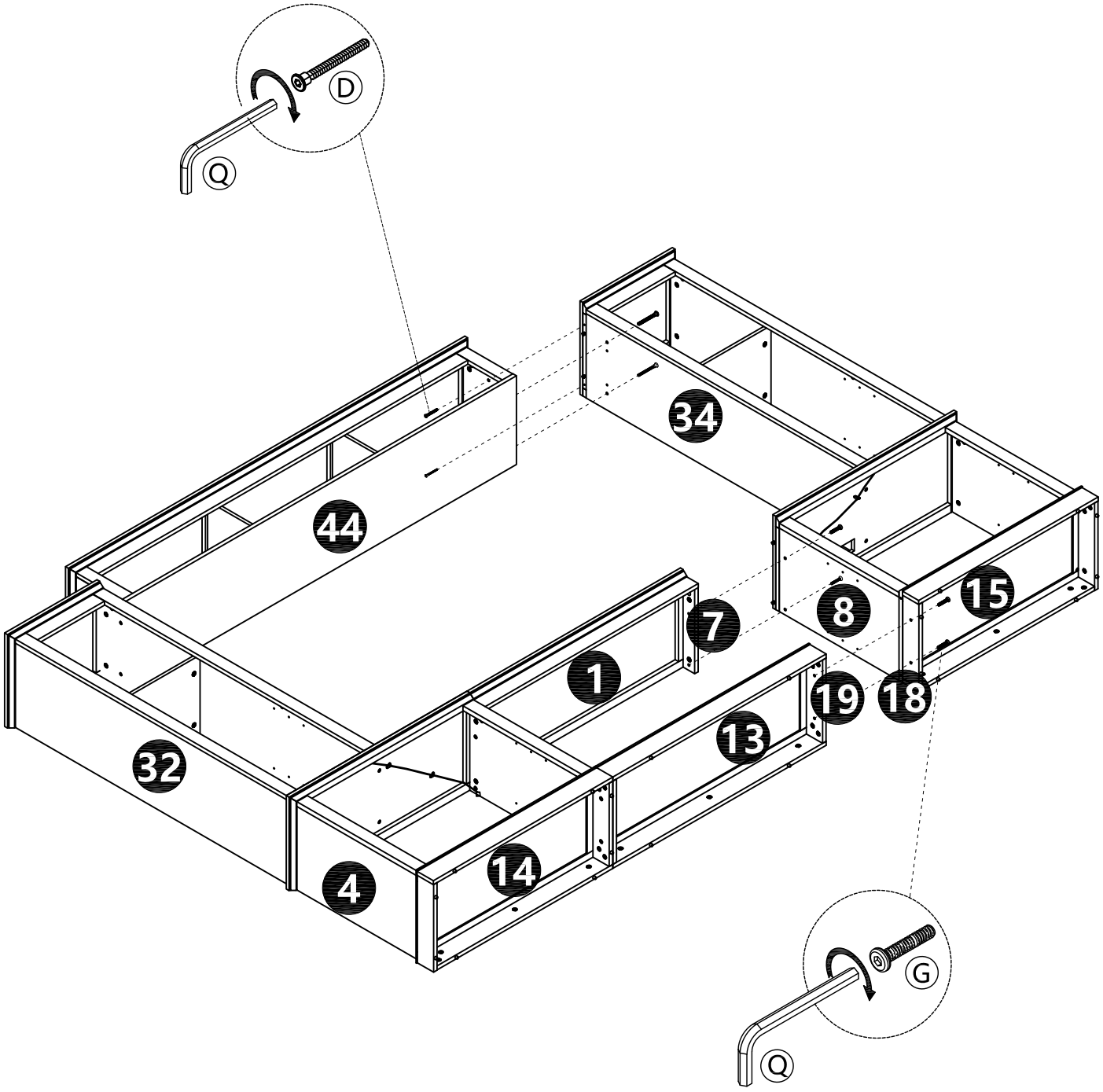

After tightening the screws, the two people stood the cabinet upright.

42

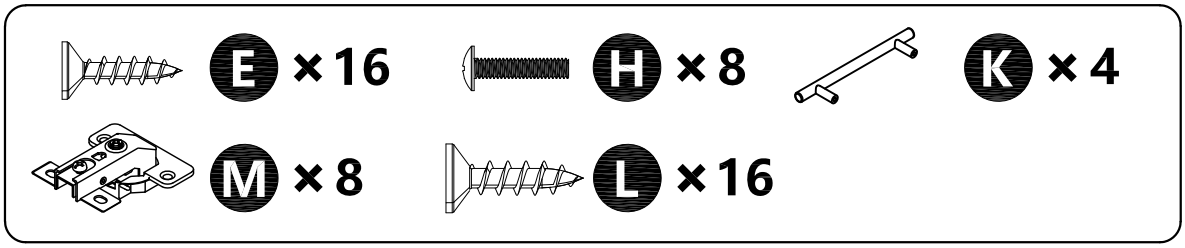

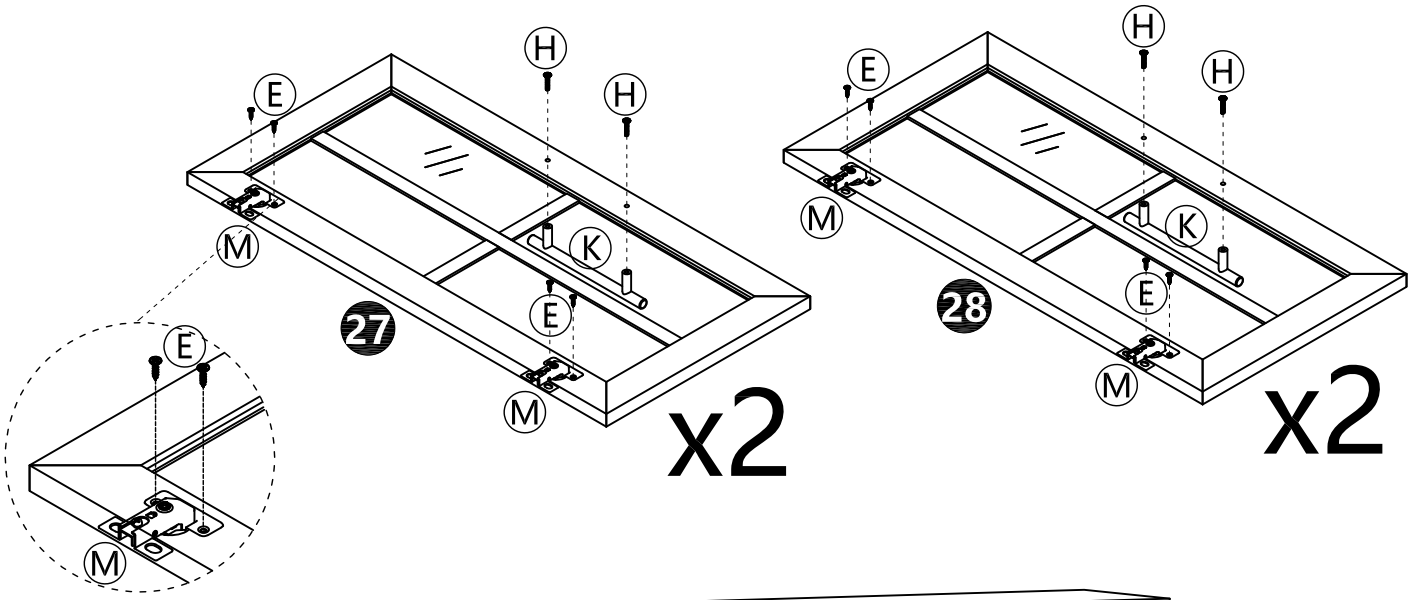

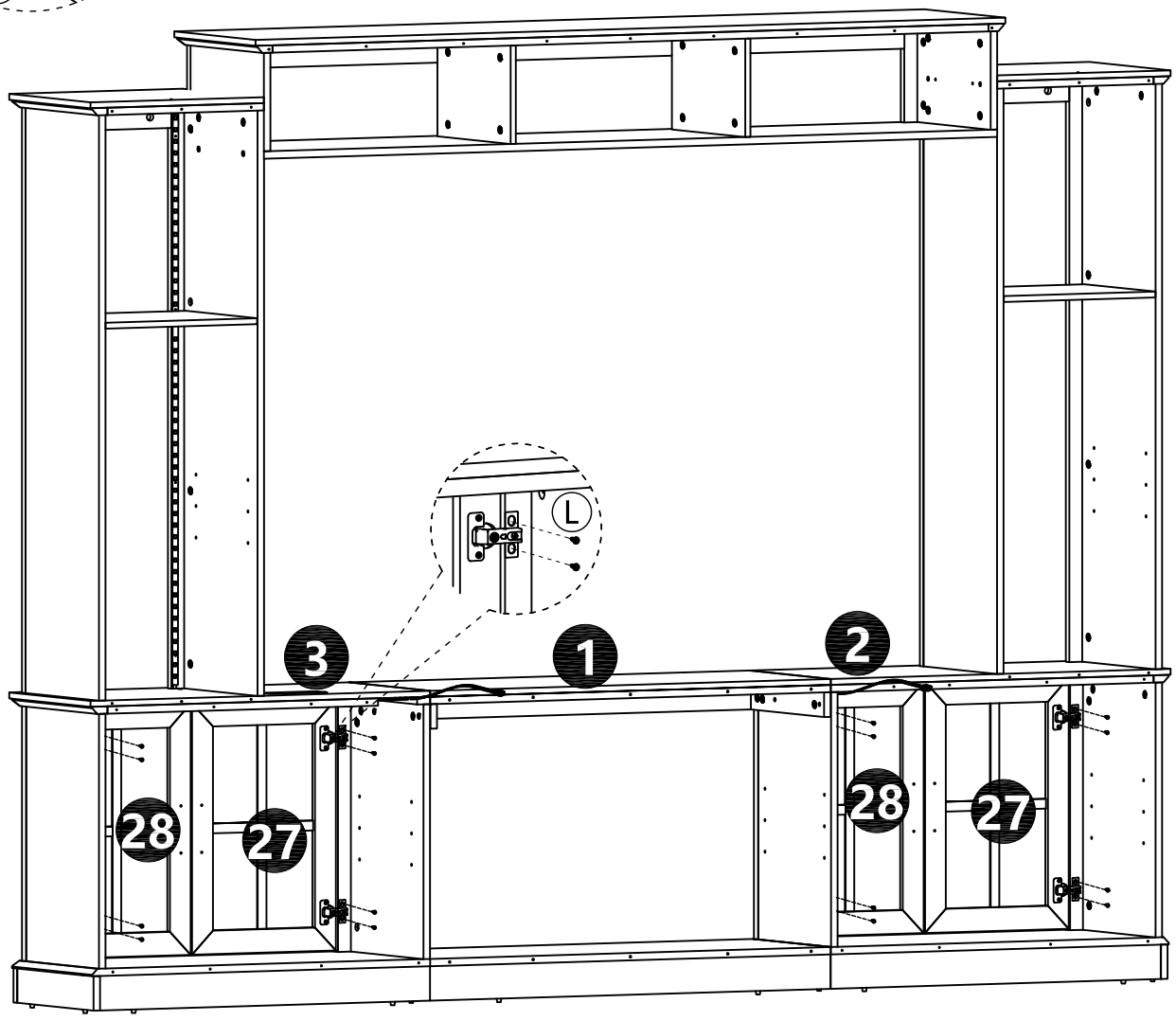

43

When the door of the cabinet is too high or too low

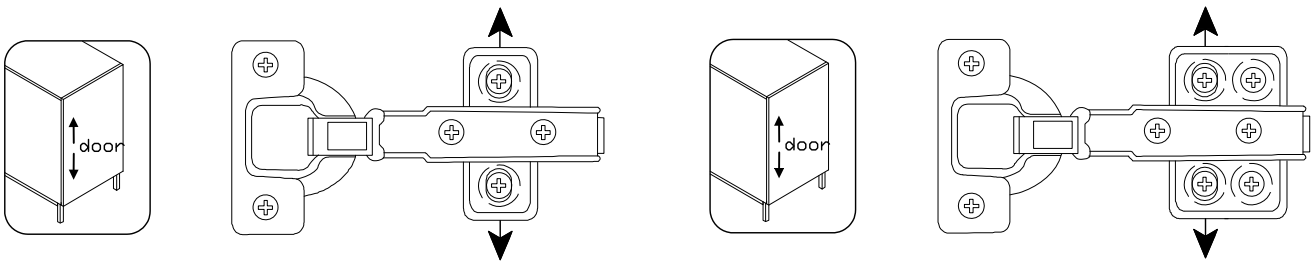

Loosen the height screws, then move the door up or down to make it level and then tighten the screws.

When the four sides of the cabinet door are not flush with the cabinet.

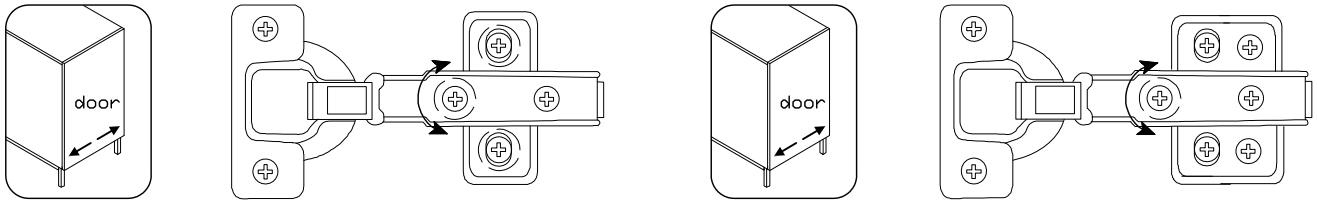

Adjust the lateral screws. Rotate the screws clockwise to increase the gap of the hinge, and rotate the screws counterclockwise to reduce the gap of the hinge until the four sides of the cabinet door are flush with the cabinet body.

When the gap between the position of the cabinet door hinge and the cabinet is either too large or too small.

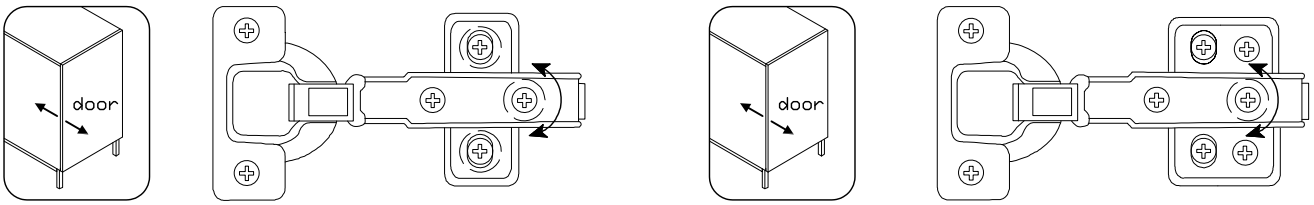

Loosen the in-and-out screws, adjust the gap between the door and the cabinet to make it even, and then tighten the screws.

44

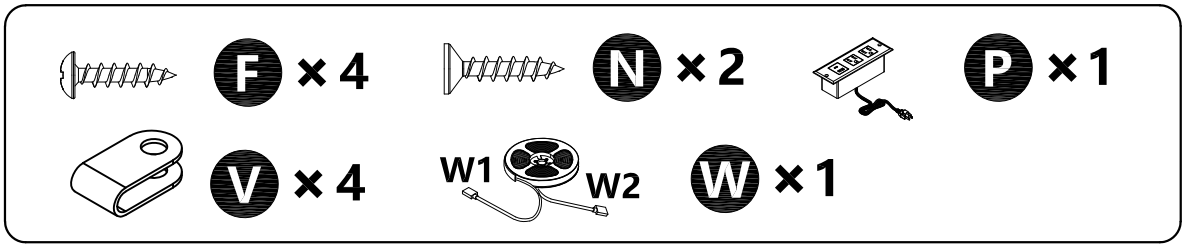

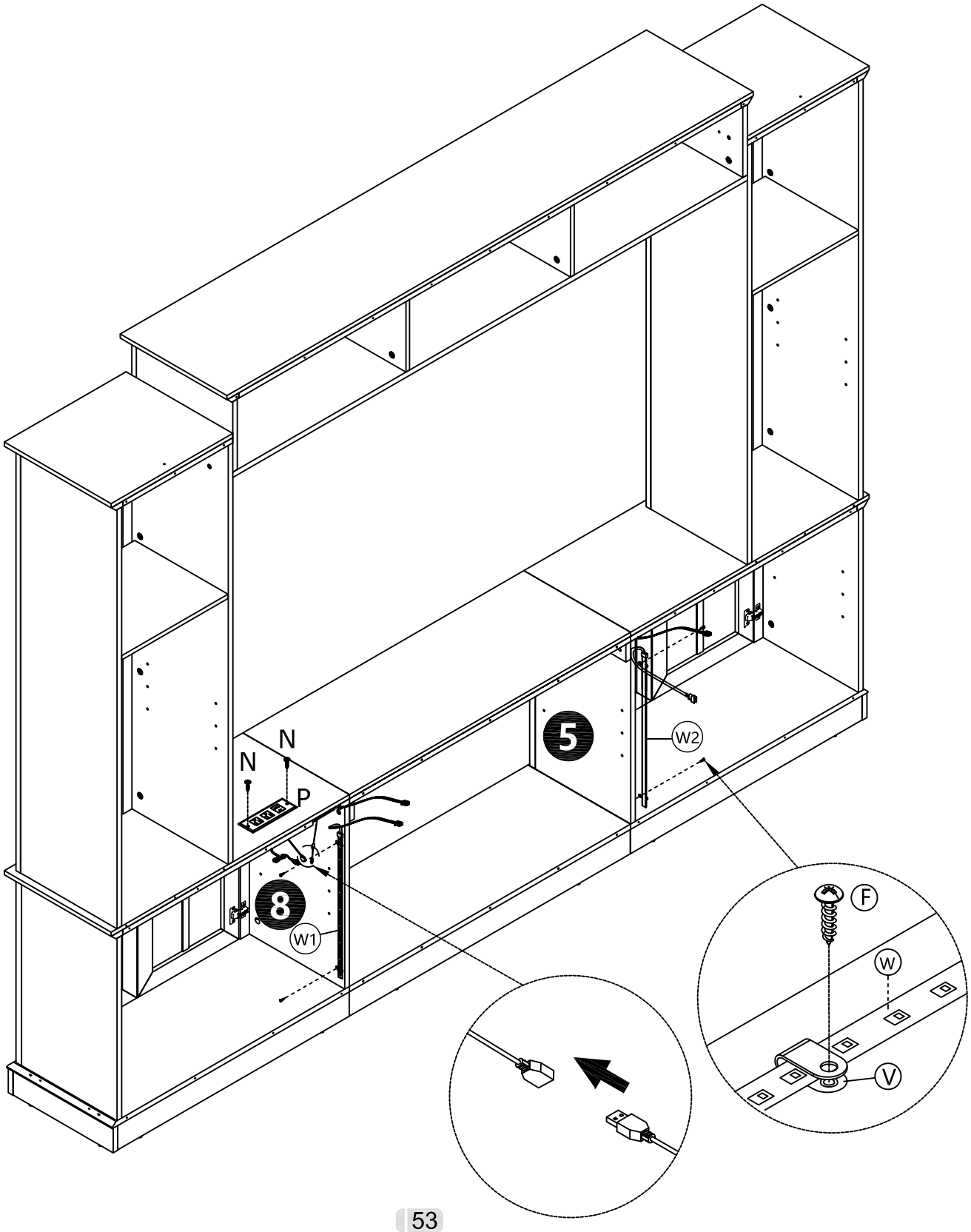

45

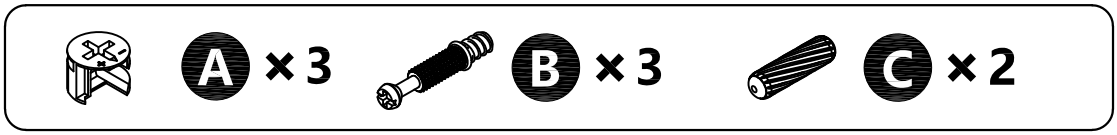

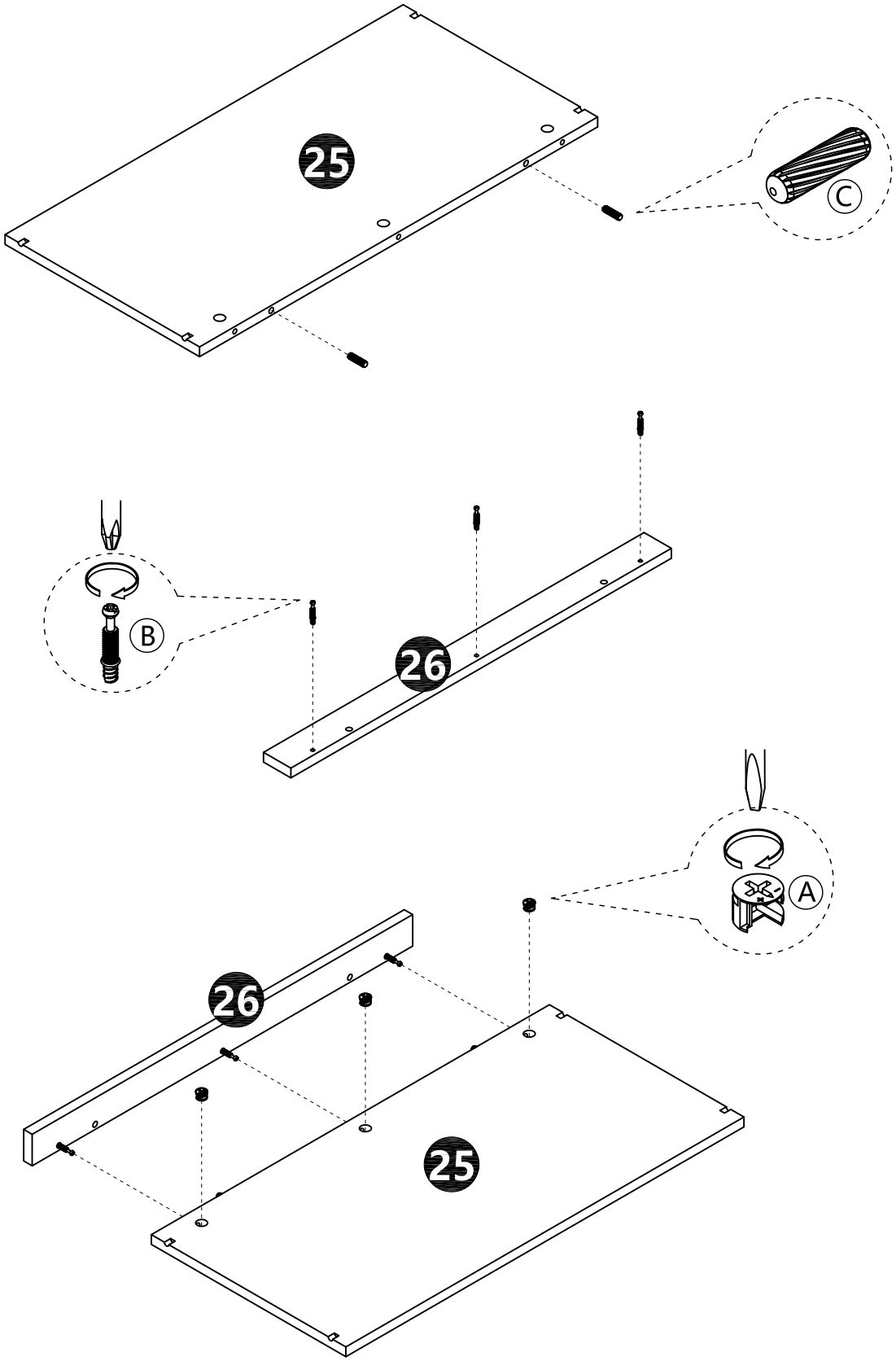

46

S ×16

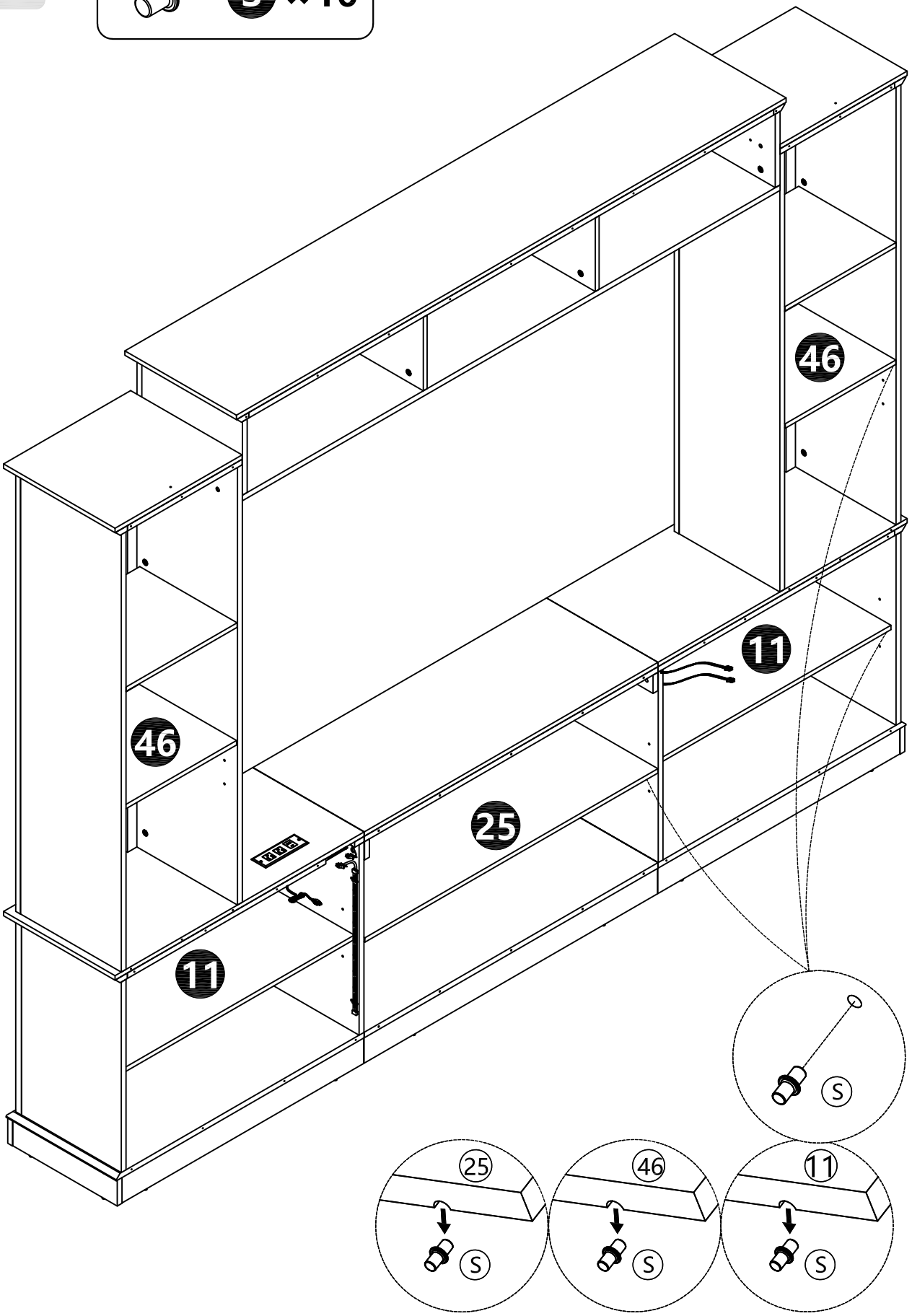

47

F ×100

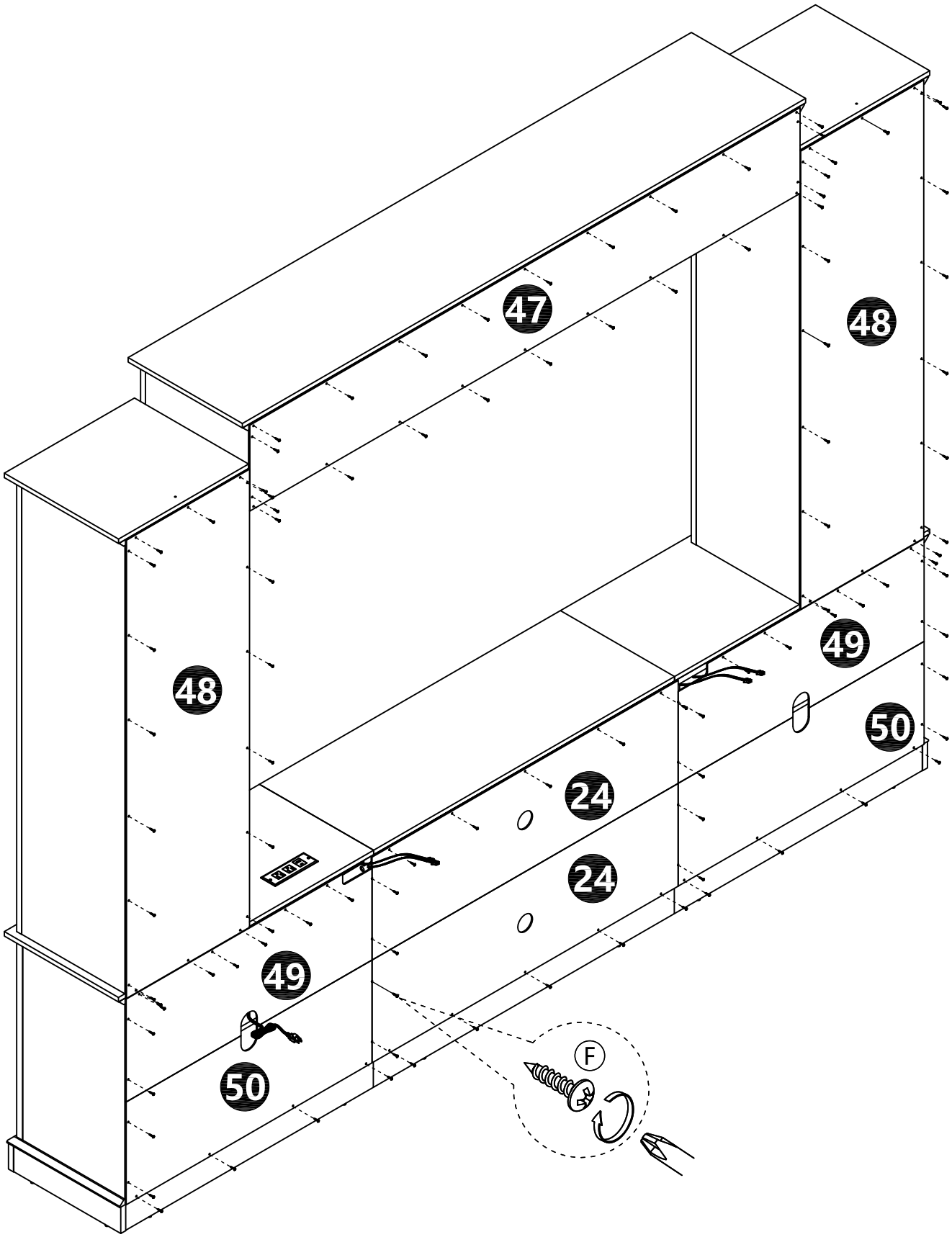

48

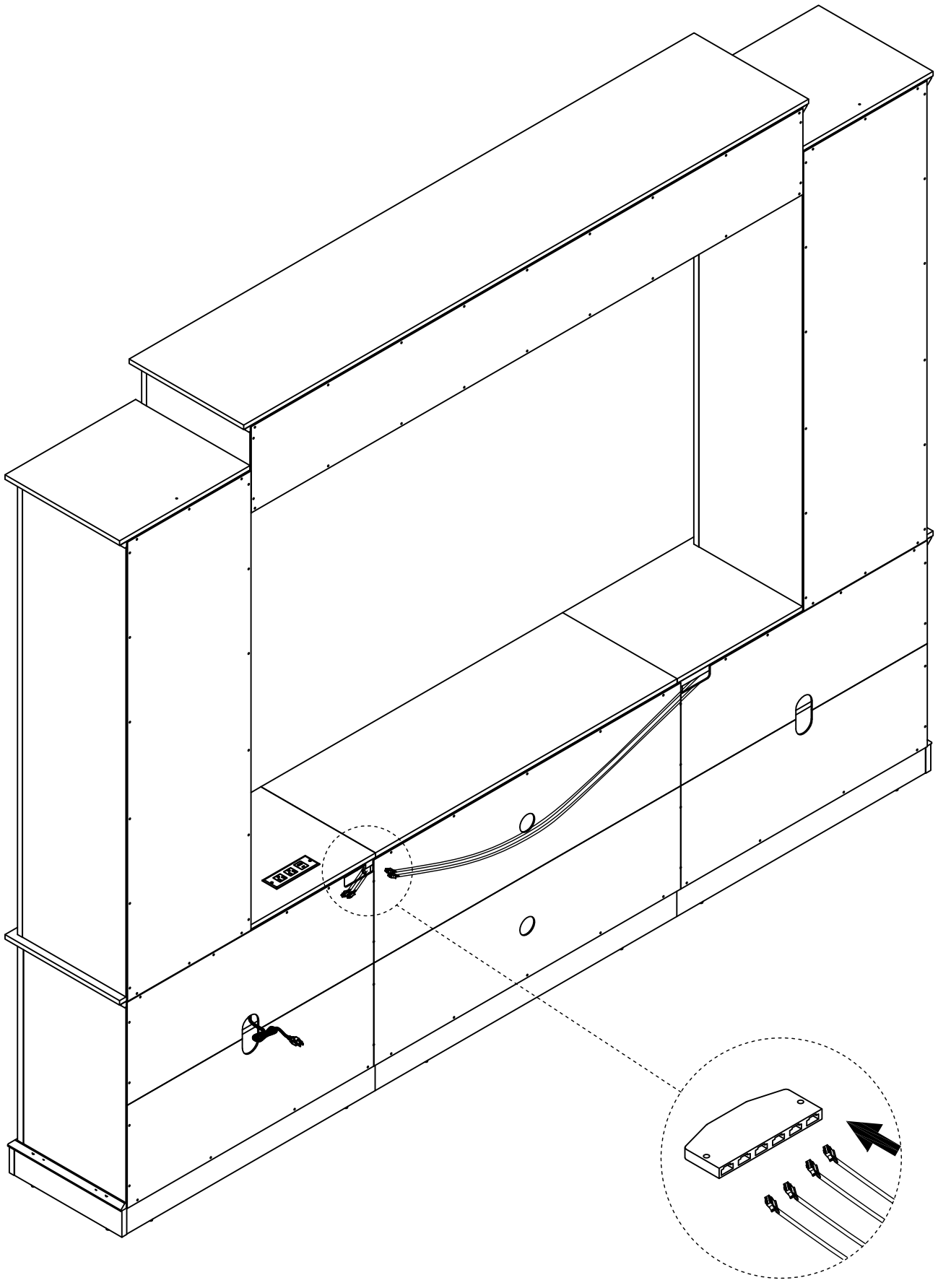

49

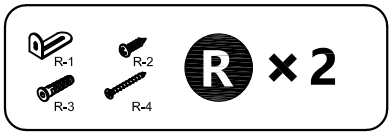



Warning Topple Over

⚠ **Warning: If you overturn the furniture, it may cause serious or fatal crushing injuries. We have a wall connection device attached, please use it to hold the furniture following these instructions.**

1. **Mark the corresponding hole positions where you want to place the furniture;**
2. **Use a impact drill to drill holes and pay attention to avoid wires and water pipes;**
3. **Knock the expansion pipes into the wall holes;**
4. **Place the furniture in the corresponding position and tighten the wall connection device with screws.**

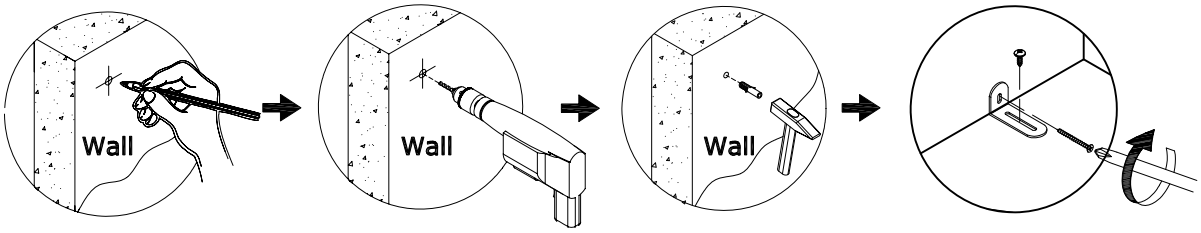

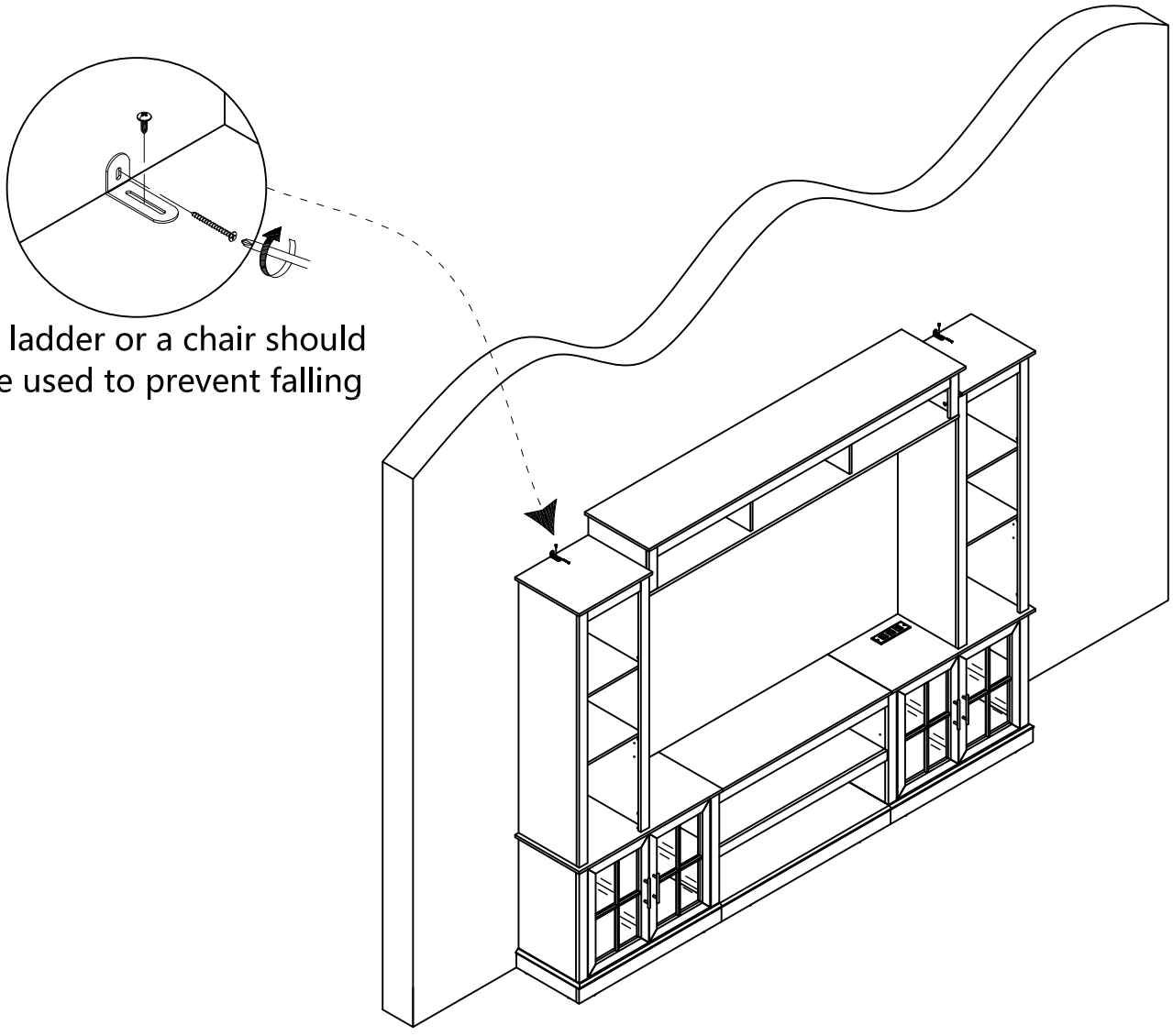

A ladder or a chair should be used to prevent falling

LED lamp with effective remote control distance of 5 meters

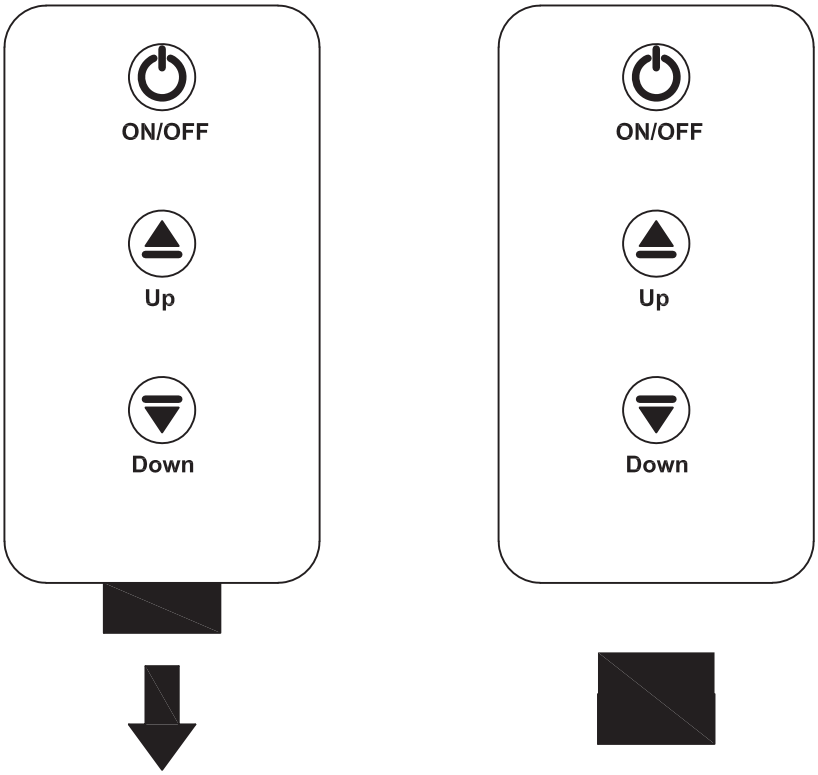

1. Take out the remote control gasket

Remote control mode

	**Turn on or off the light strip** **Press them in sequence.** **There are three colors to choose from**
	**Press once to gradually brighten,** **press and hold to brighten or dim**
	**Press once gently to gradually dim the light.**

AFTER-SALE

AFTER-SALE SERVICE

If you have any suggestions or encounter quality issues with our products, please contact us first.

Our after-sales team will respond within 24 hours, and we will do our best to provide a solution until you are satisfied.

GUARANTEED CUSTOMER SERVICE

Your shopping experience is very important to us!

If you feel unsatisfied or have any questions,
just contact us!

If you want to share how wonderful our smart product makes your home, **just contact us** and share your pictures!

For further information,
just contact us!

service@kmcgloble-us.com
(USA) +1 213-816-4788