User's Manual

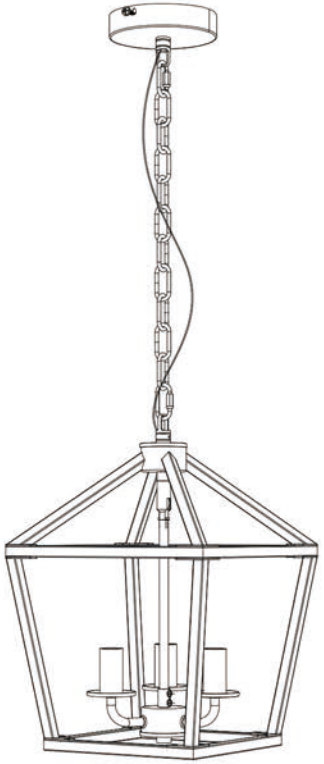

Attention:

1. Please read the assembly instruction carefully before installing, using and repairing lamps, and keep them properly for future use.
2. The power supply used shall not exceed the specified voltage range (rated voltage AC110V ± 10%, frequency 60Hz)
If it is used for a long time above the rated voltage range, the lamp may overheat and cause damage.
3. Please check whether the cables and switches are in good condition before use, and ensure that the local voltage is consistent with the lamp voltage.
4. Please turn off the power before installing lamps.
5. Do not install the lamp above high-temperature objects, such as stove, gas, exhaust funnel, etc., which may damage the lamp.
6. Do not refit lamps without permission to avoid failure.
7. Please clean and check regularly, and turn off the power before cleaning. Wipe its surface with a dry cloth, but do not wipe it with acidic or alkaline chemical solvents, otherwise it will cause serious damage to its surface.

The ceiling

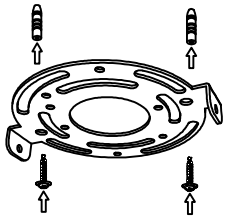

① Step1 : Disassemble the hanging plate of the lamp, then the hole position of the hanging plate is measured and located on the ceiling by borrowing the hole position of the hanging plate.

② Step2 : Punch holes in the positioning mark according to the size of the expansion screw, then hammer the expansion screw into the hole with a hammer (leaving one centimeter outside) and then counter clockwise unscrew the nut and meson to lock the hanging plate. (If your ceiling is not concrete but a wooden suspended ceiling,use self-tapping screws directly to secure the cross-hanging panels).

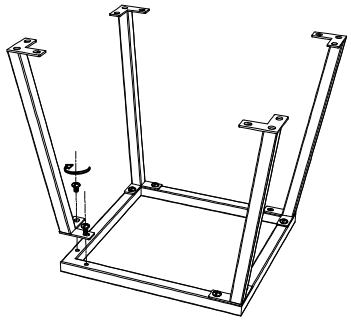

③ Step3 : As shown in Figure 3, please lock the small box and bracket together

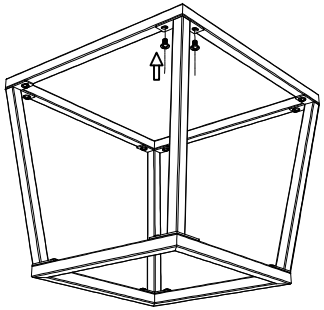

④ Step4 : As shown in Figure 4, please lock the large box and bracket together

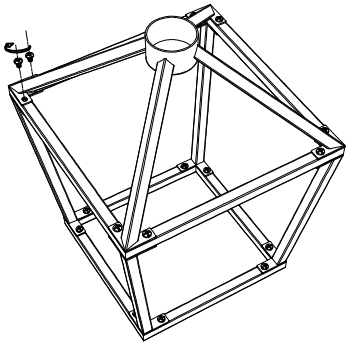

⑤ Step5 : As shown in Figure 5, please lock the quadcopter onto the large box

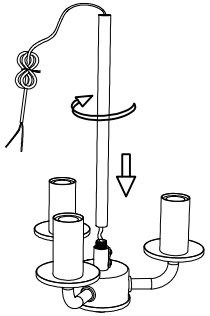

⑥ Step6 : As shown in Figure 6, please connect the lamp assembly to an iron pipe and thread the wires properly

Step7 : As shown in Figure 7, please lock the lamp assembly onto the lamp body frame through a universal joint

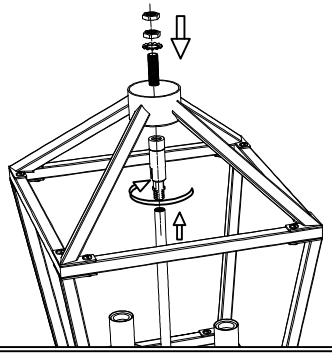

⑦

Step8 : As shown in Figure 8, please lock the iron parts onto the lamp body and secure the safety screws

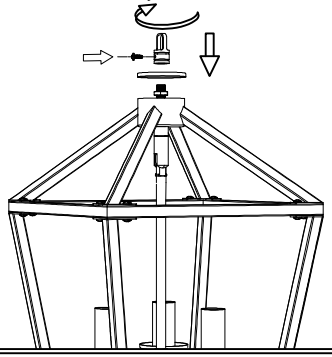

⑧

The ceiling

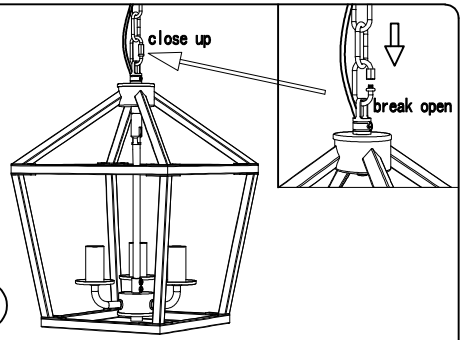

⑨ Step9 : As shown in Figure 9, please connect the lamp body and iron chain with locking buckles

Step10 :As shown in Figure 10, please connect the lamp body and the ceiling panel with locking buckles

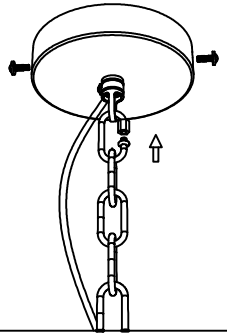

⑩

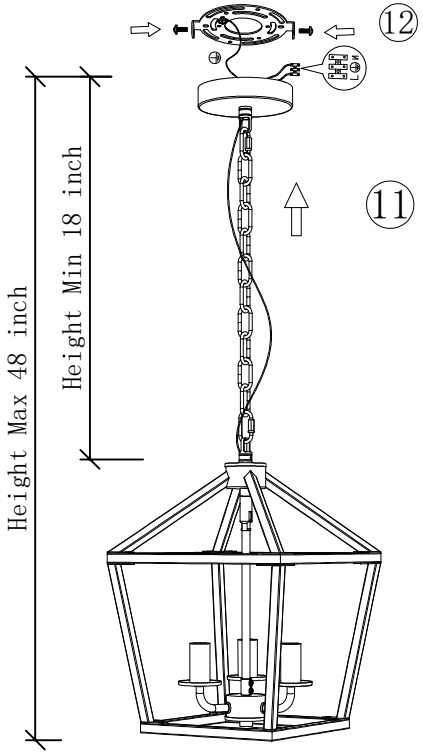

⑪ ⑫

Step11 :Install the lamp hub on the hanging plate according to the hole position. please ensure that the lamp body and ceiling are securely connected.

Step12 :The main line of the lamp body shuld be checked if the lamp works normally or not by connect 110V power supply. It is recommended that professional electrician install the lamp.

part list :

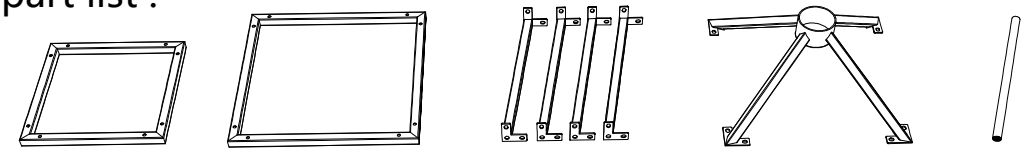

1pcs 1pcs 4pcs 1pcs 1pcs

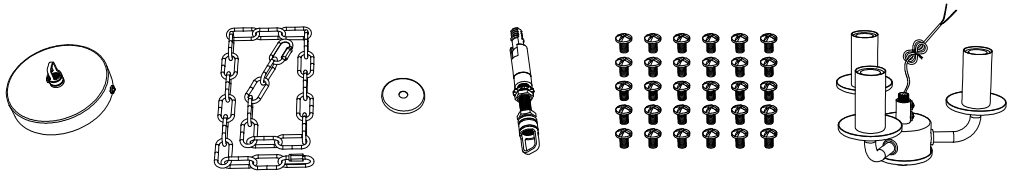

1pcs 1pcs 1pcs 1pcs 30pcs 1pcs