CONVERTIBLE SLEEPER SOFA BED

ASSEMBLY INSTRUCTIONS

Dear Customer, For product assembly, please refer to document as the correct version. Thank you.

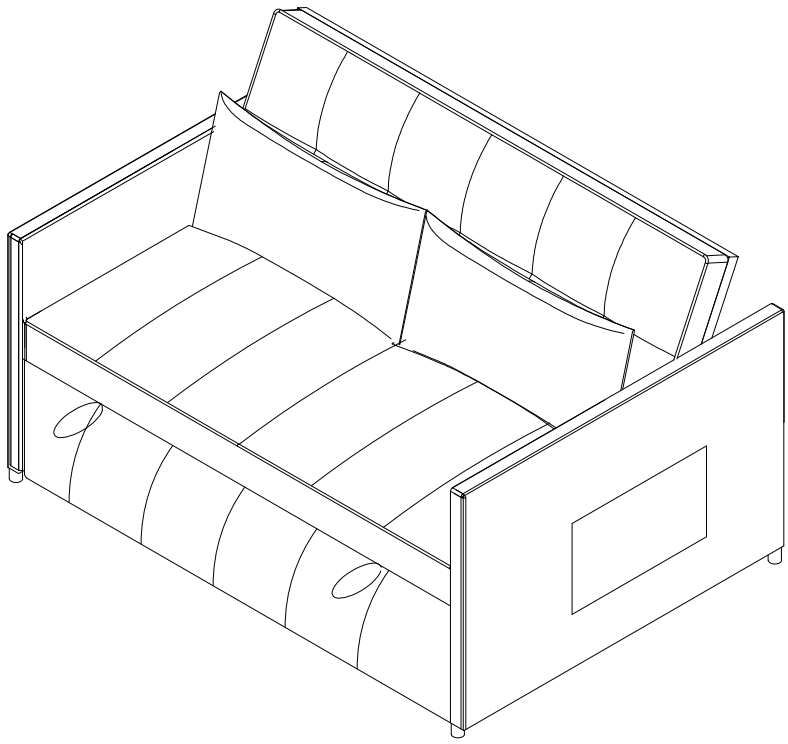

Installation video

Thanks for your purchasing.

- Please read the instruction completely before assembly.
- Please do not throw away any of the packaging or the instruction until you have all the components and when the furniture is fully assembled.
- Considering the size and weight of the sofa, we recommend two adults to assemble the sofa, on a carpeted or padded area.
- Keep all components and packaging out of reach of children or animals to avoid risk of choking or suffocation.

PACKAGE

Please read the following instructions carefully for the best experience.Cushions were vacuum packed and sealed for shipping, In order to boostthe rebound process, please follow the steps below.

① 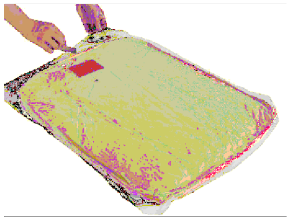

Open the vacuum bag carefully.

② 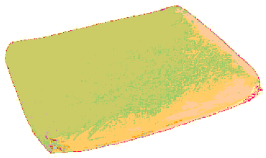

Initial look.

③ 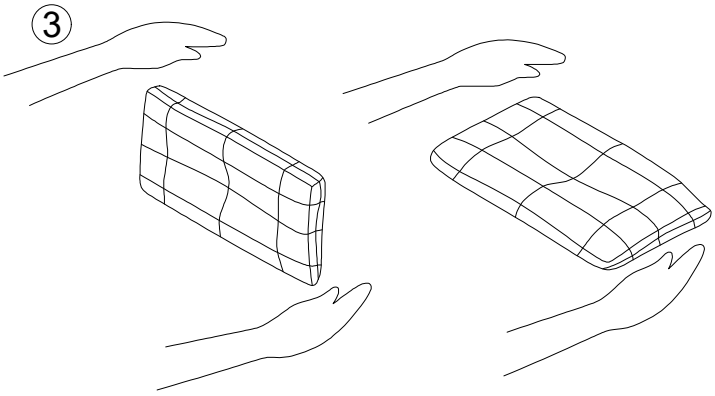

Open the zip,repeatedly tap the sides, front and back to make it rebound better and fluffy.

④ 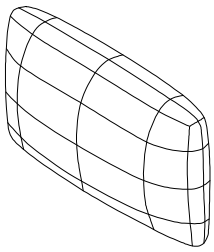

Repeat step 3 until the sponge is fully expanded, and zip the cover. Wait to rebound after 72 hours at least.

ASSEMBLY TOOLS REQUIRED

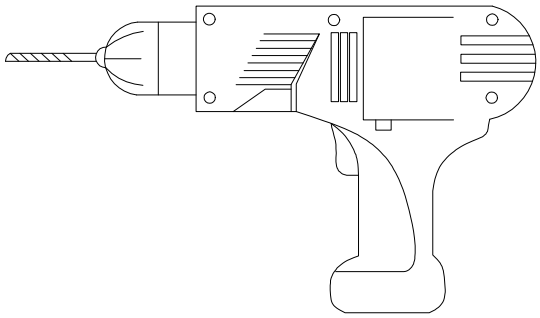

Electric Drill
(Not provide)

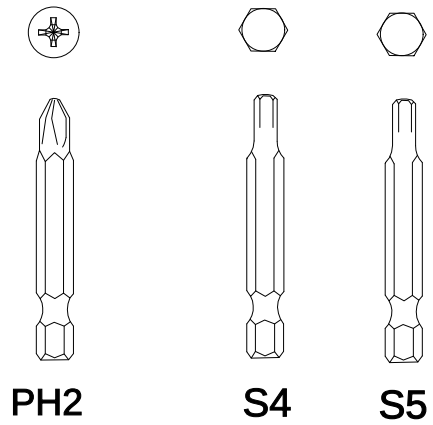

Bit
(Include in hardware bag)

Electric Drill tool is not included.
Electric drill will improve your assembling efficiency.
You can use it if you have this tool,
DO NOT over drill to provent from damaging screws and boards.

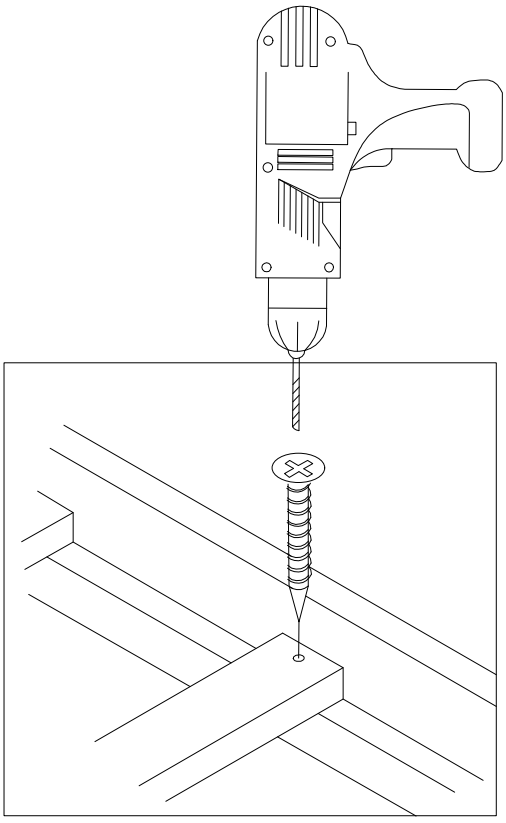

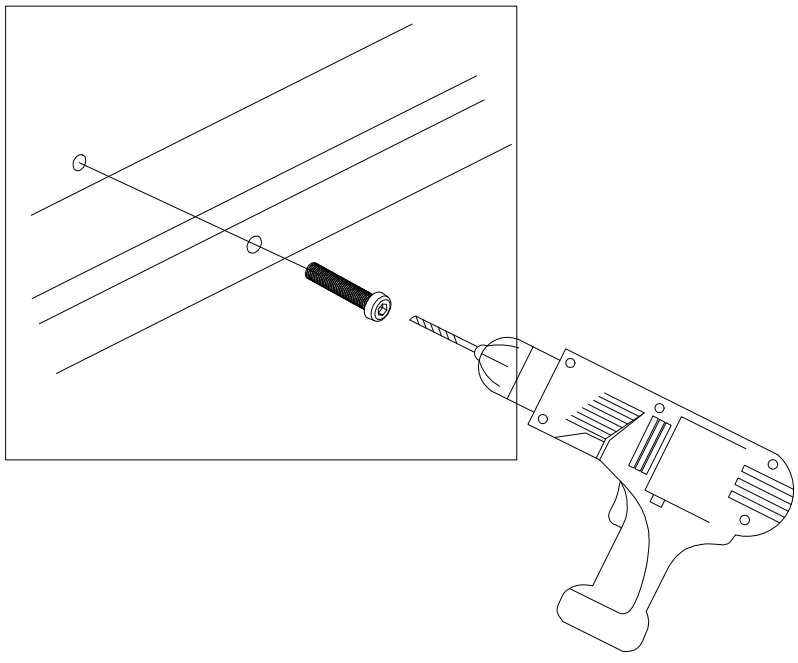

CAUTION:

- Please do not open the compress packaging until your sofa frame is completely assembled.
- Compress cushions or pillows need to fully fluffed within 72 hours for your perfect use.
- Please keep children away from plastic bag or any small pieces of stuff.
- After assembly is completed, don't forget to pat the back cushions and seat cushions, make them recovering better. And wait 72 hours for fully rebound.
- Cushions should be regularly maintained for perfect use.
- 2 people to install is recommend.
- 2 people to lift the sofa if you want to move it, do not push or pull directly
− You can assemble it with out packaging tools or home electric drill, as shown below, Electric Drill tool is not included.
Electric drill will improve your assembling efficiency.
You can use it if you have this tool, DO NOT overtight to prevent from damaging screws and slats/boards.

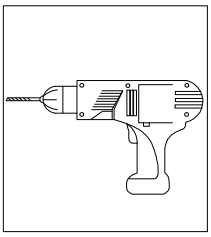

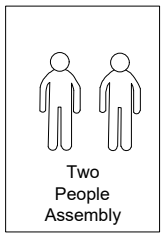

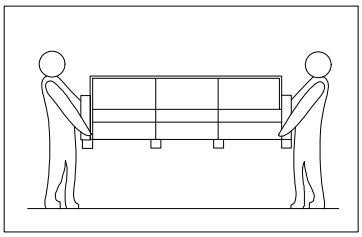

Components:

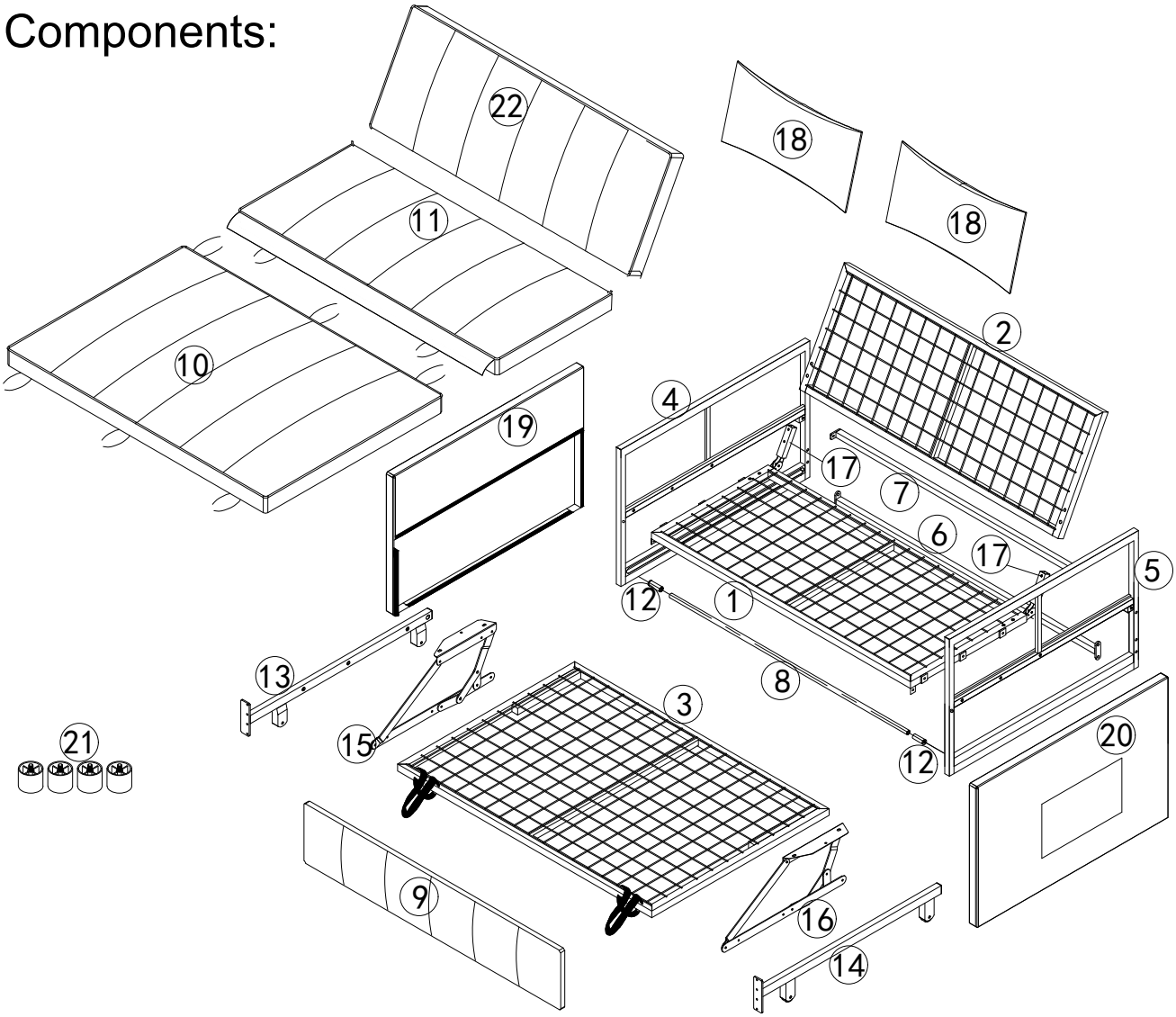

PARTS LIST:

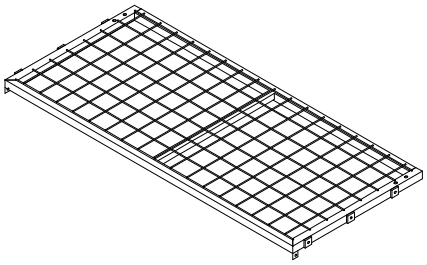

① x1

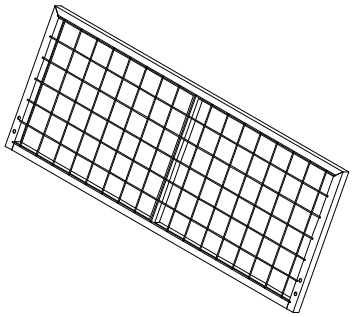

② x1

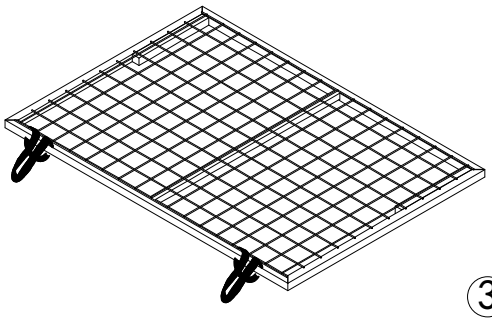

③ x1

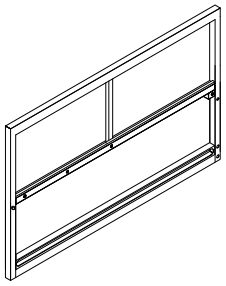

④ x1

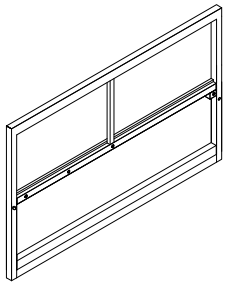

⑤ x1

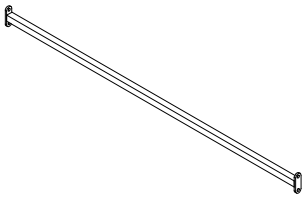

⑥ x1

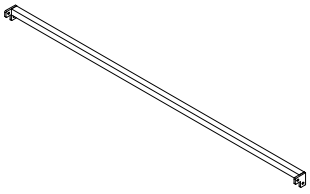

⑦ x1

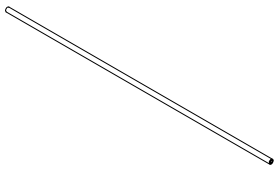

⑧ x1

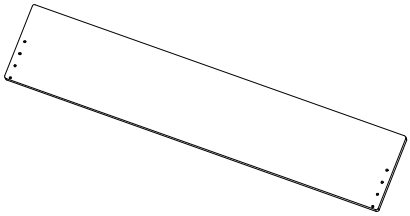

⑨ x1

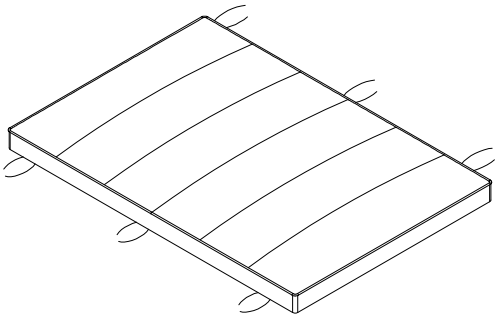

⑩ x1

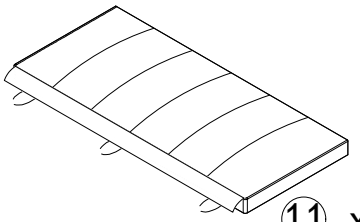

⑪ x1



⑫ x2

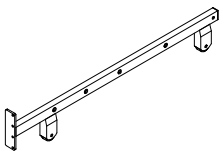

⑬ x1

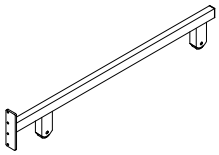

⑭ x1

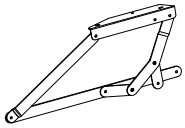

Left ⑮ x1

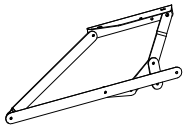

Right ⑯ x1



⑰ x2

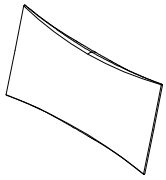

⑱ x2

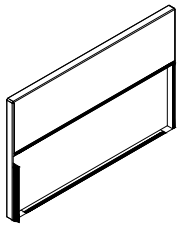

⑲ x1

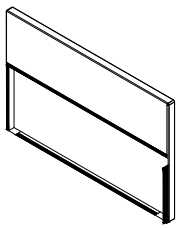

⑳ x1



㉑ x4

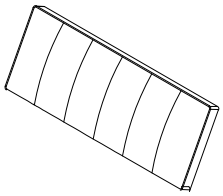

㉒ x1

HARDWARE LIST:

Ⓐ



M8*35 6PCS

Ⓑ



M6*25 4PCS

Ⓒ



M6*16 26PCS

Ⓓ



M8*25 2PCS

Ⓖ



M6*20 8PCS

Ⓗ

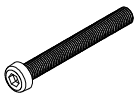

M6*45 2PCS

Ⓔ

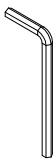

S5 1PCS

Ⓕ



S4 1PCS

Ⓘ

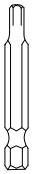

S5 1PCS

Ⓙ

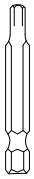

S4 1PCS

Step 1: Use C to fix 13 and 15

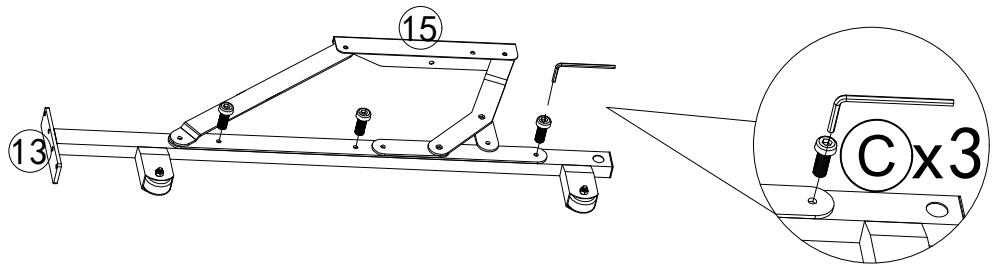

C X 3

Step 2: Use C to fix 14 and 16

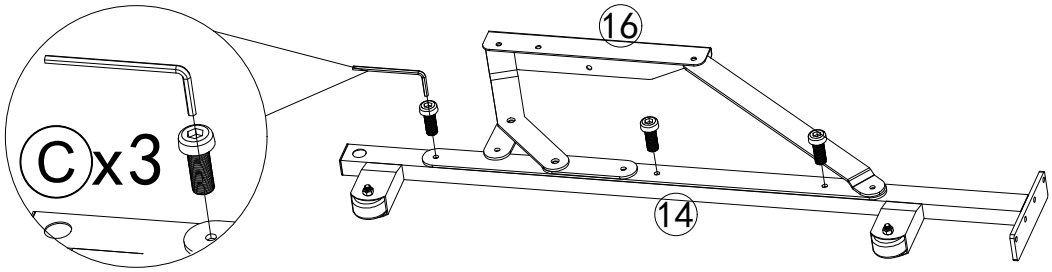

C X 3

Step 3: Use G to fix 13 and 9
Use G to fix 14 and 9
Use H to fix 12 and 8

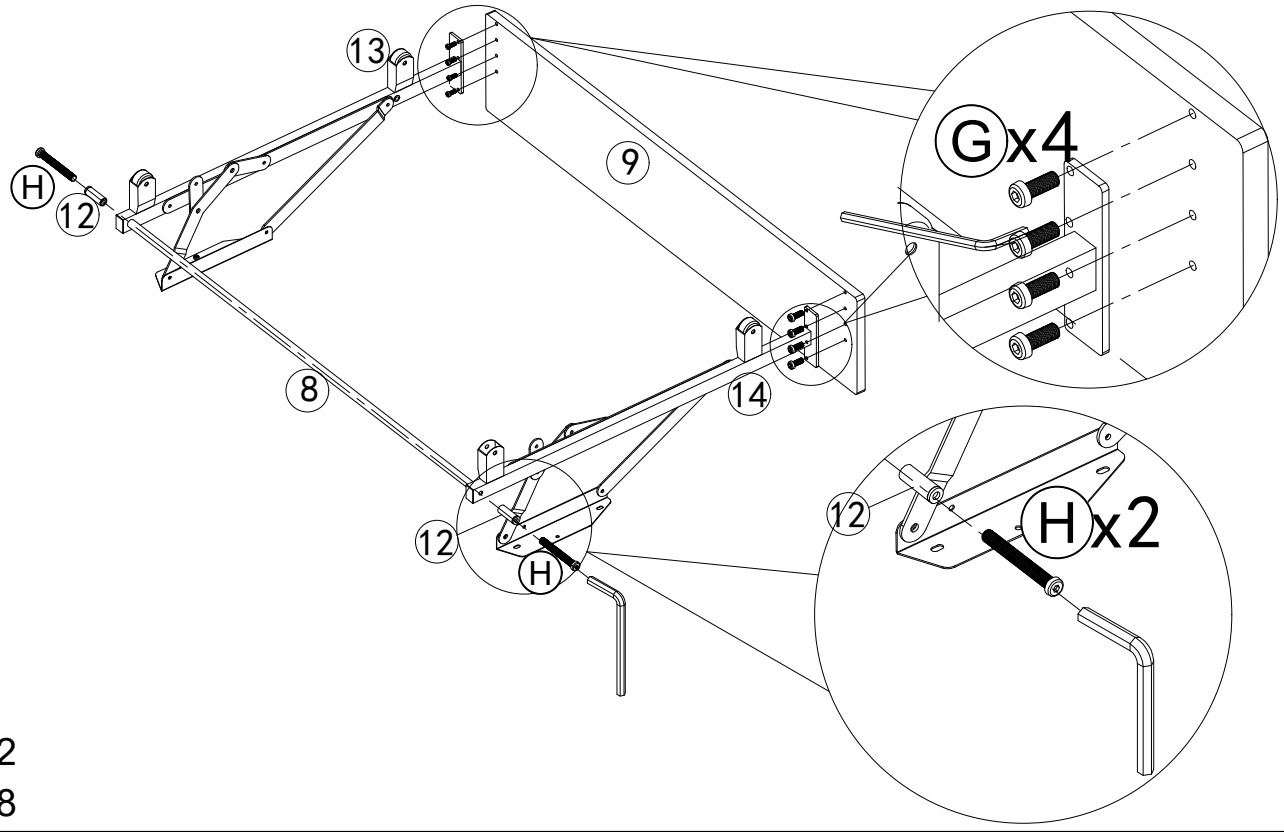

H X 2
G X 8

Step 4: Use (C) to fix (13) and (3)
Use (C) to fix (14) and (3)

Step 2

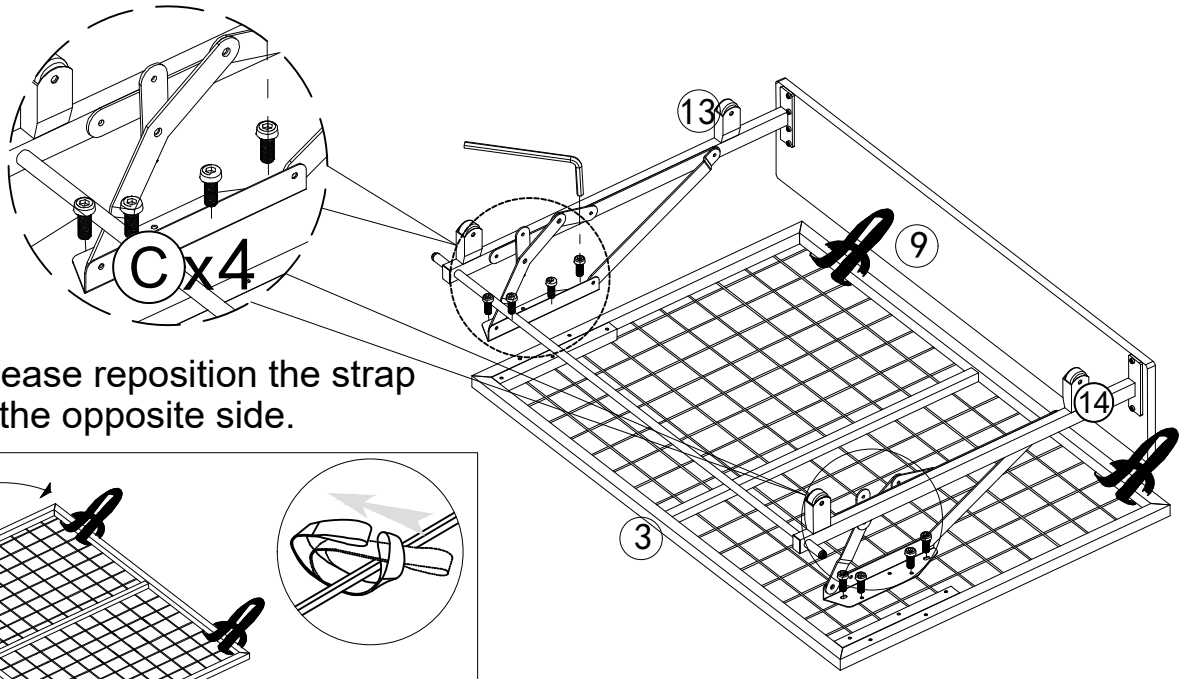

Step 1: Please reposition the strap to the opposite side.

(C) X 8

Step 5: Put (10) on the top of (3)

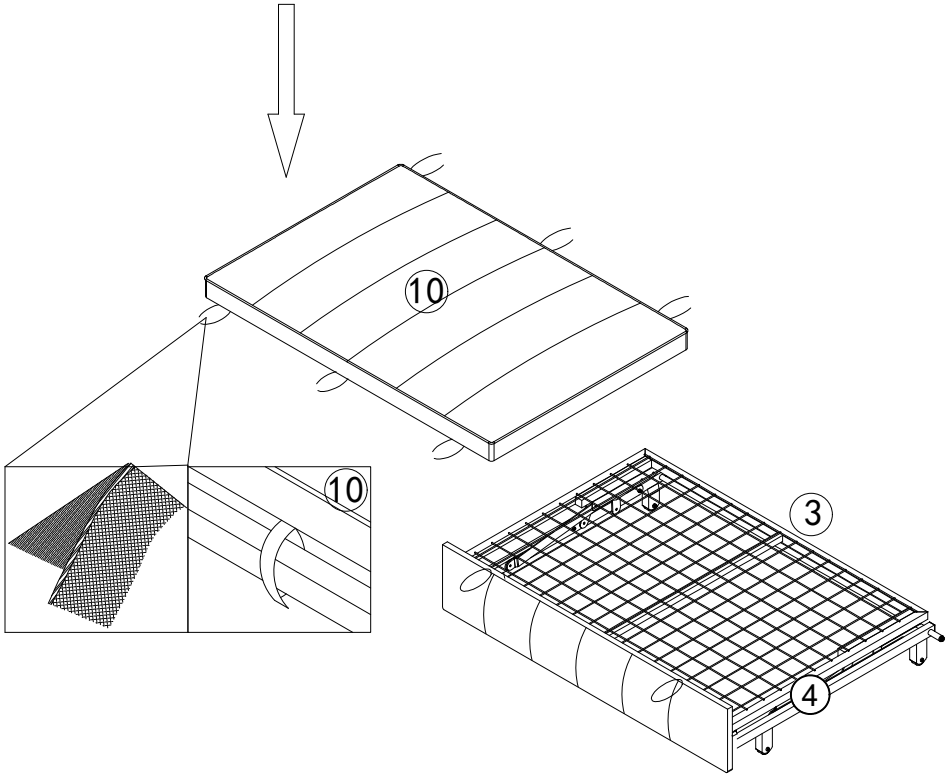

Step 6:

Use (A) to fix (5) and (1)
Use (D) to fix (5) and (1)
Use (C) to fix (5) and (6)
Use (B) to fix (5) and (7)

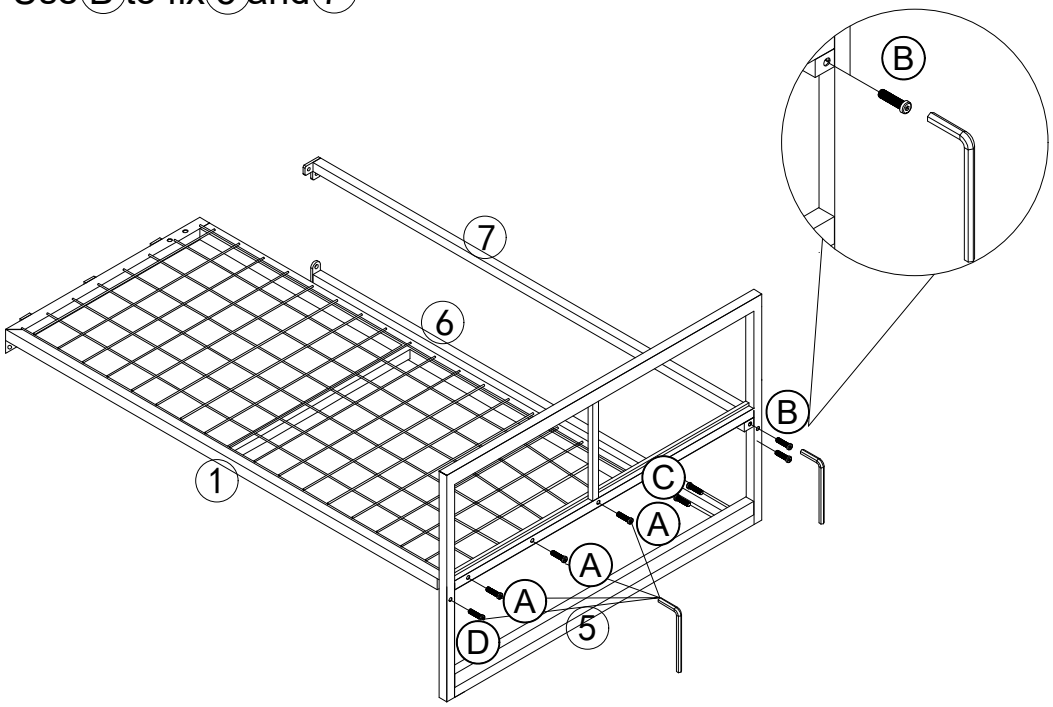

(A) X 3
(B) X 2
(C) X 2
(D) X 1

Step 7:

Use (A) to fix (4) and (1)
Use (D) to fix (4) and (1)
Use (C) to fix (4) and (6)

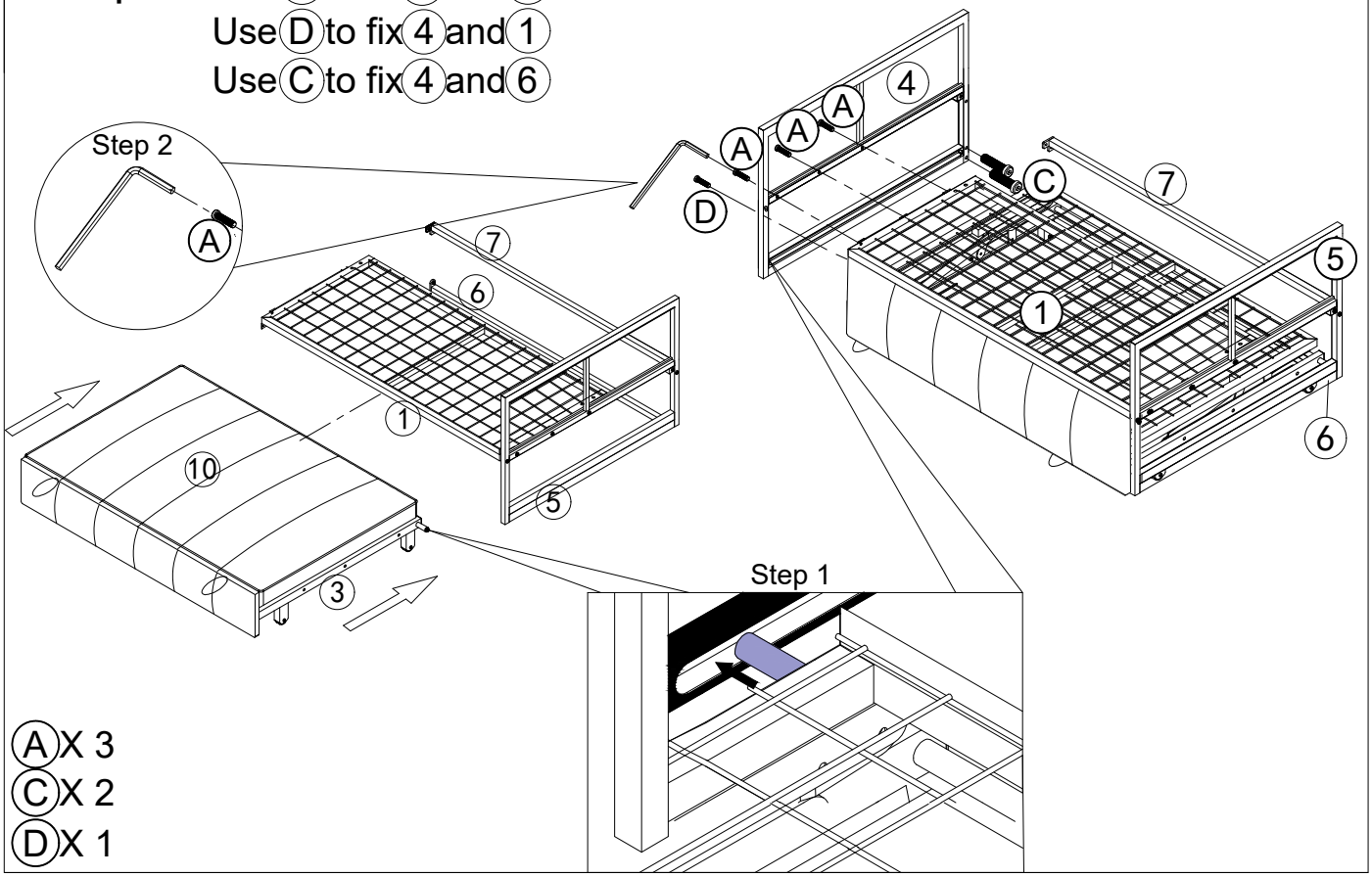

(A) X 3
(C) X 2
(D) X 1

Step 8: Use (B) to fix (4) and (7)

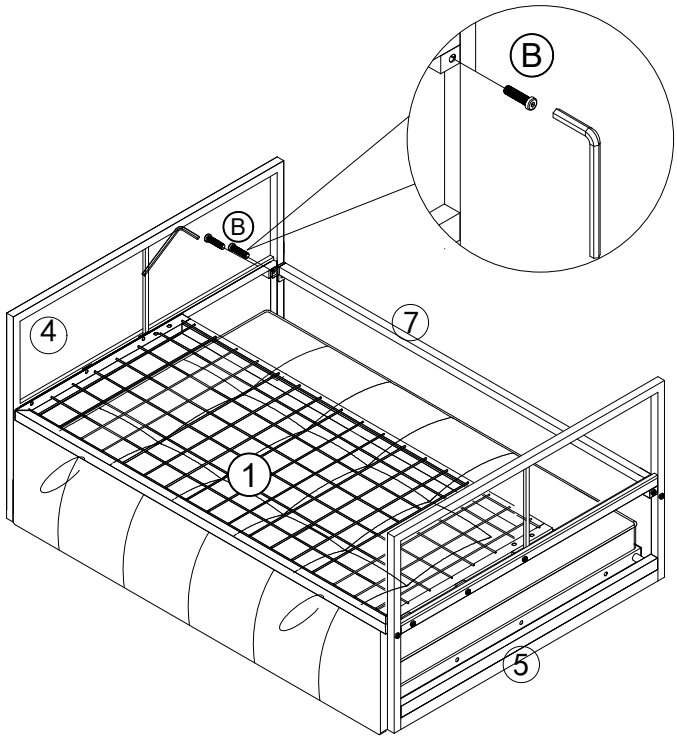

(B) X 2

Step 9:

If the opening direction of the part does not match the serial number, please swap it left to right.

Please make sure to pull the fabric cover down tightly. Otherwise, the Velcro at the bottom will notfasten securely.

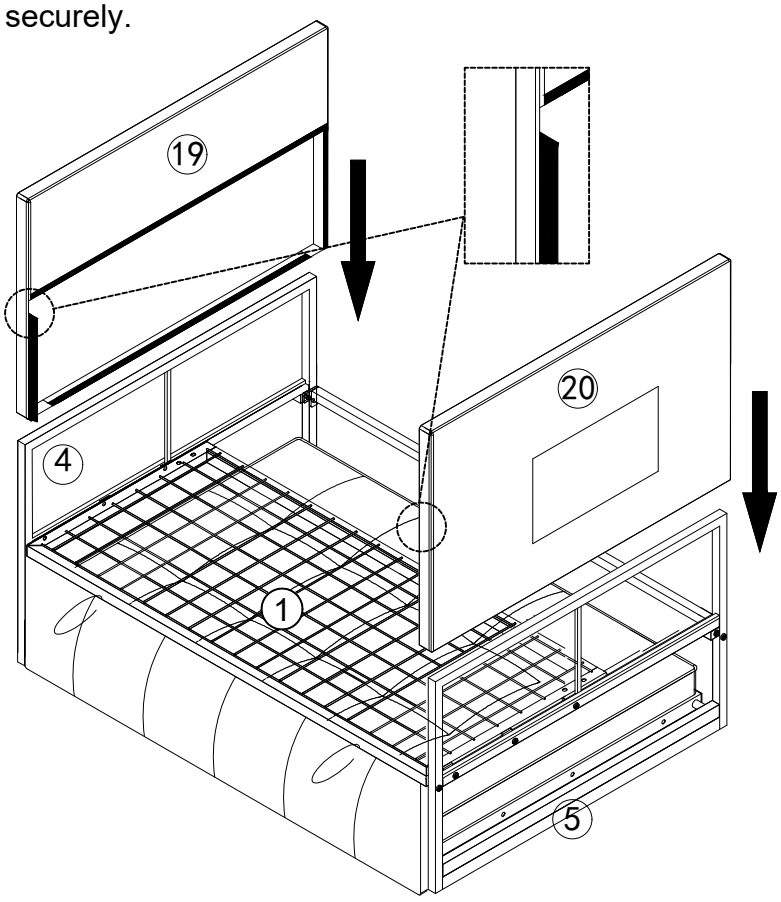

Step 10: "First, erect and adhere the two sidesand the inner panels, then flip it over to adhere the bottom and install the feet.

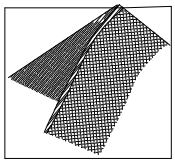

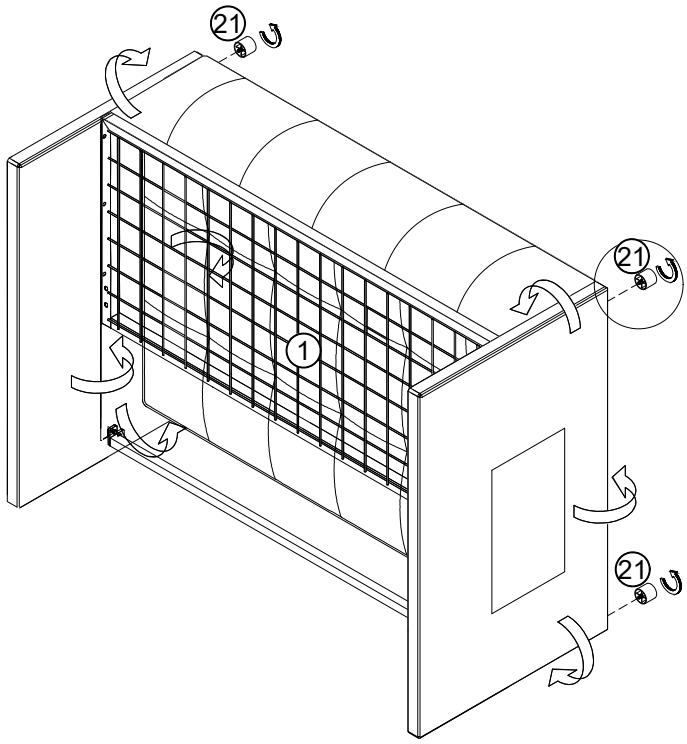

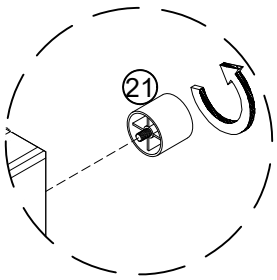

Step 11: The hinges which with arrow sticker is front side,Insert the hings (17) with arrow side to the seat frame (1)

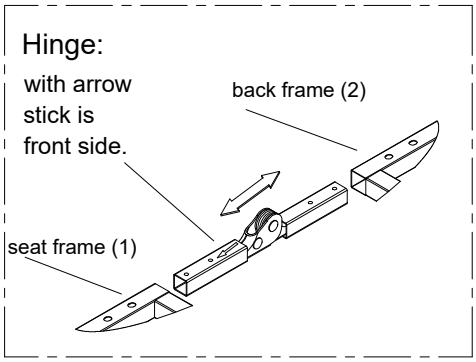

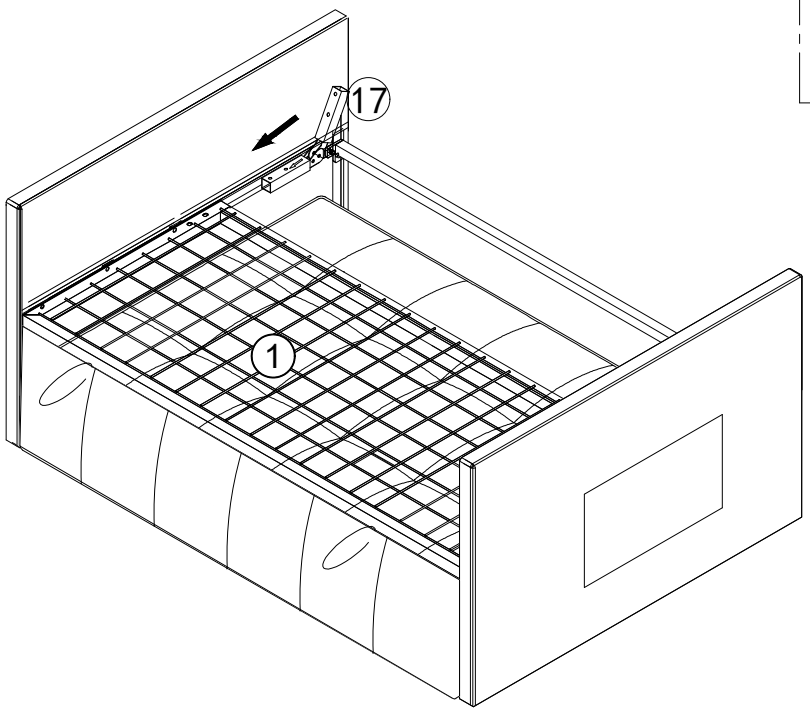

Step12: Use Ⓒ to fix ① and ⑰

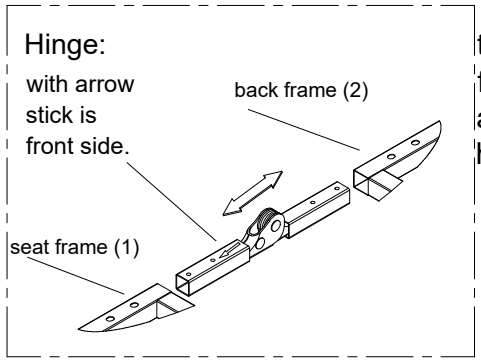

then insert back frame ② to another side of hinges

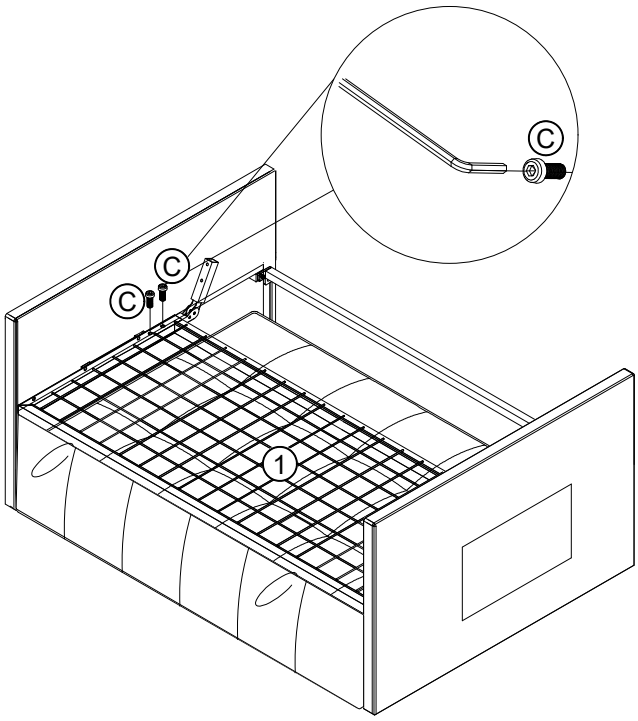

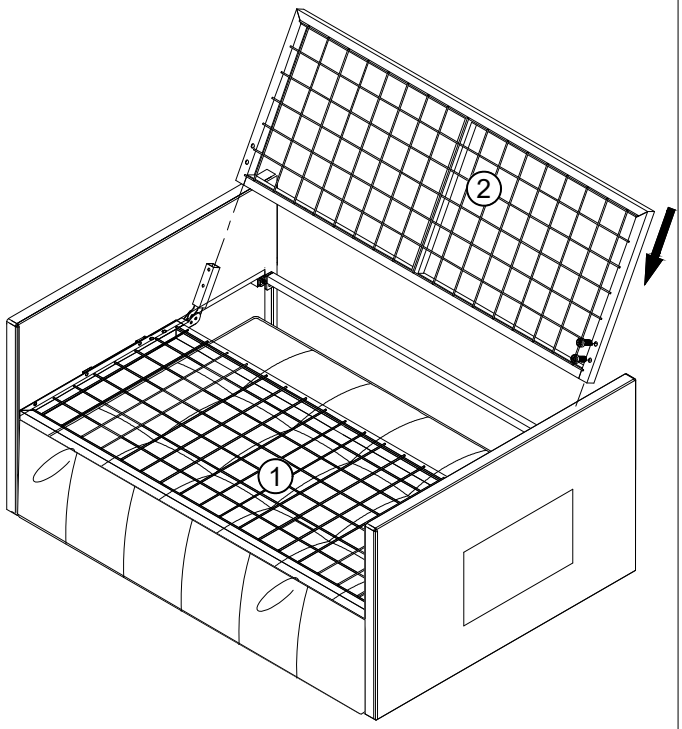

ⒸX 4

Step 13: The hinges which with arrow sticker is front side,Insert the hings ⑰ with arrow side to the seat frame ① and tighten with screw "Ⓒ",then insert back frame ② to another side of hinges and tigten with screw "Ⓒ".

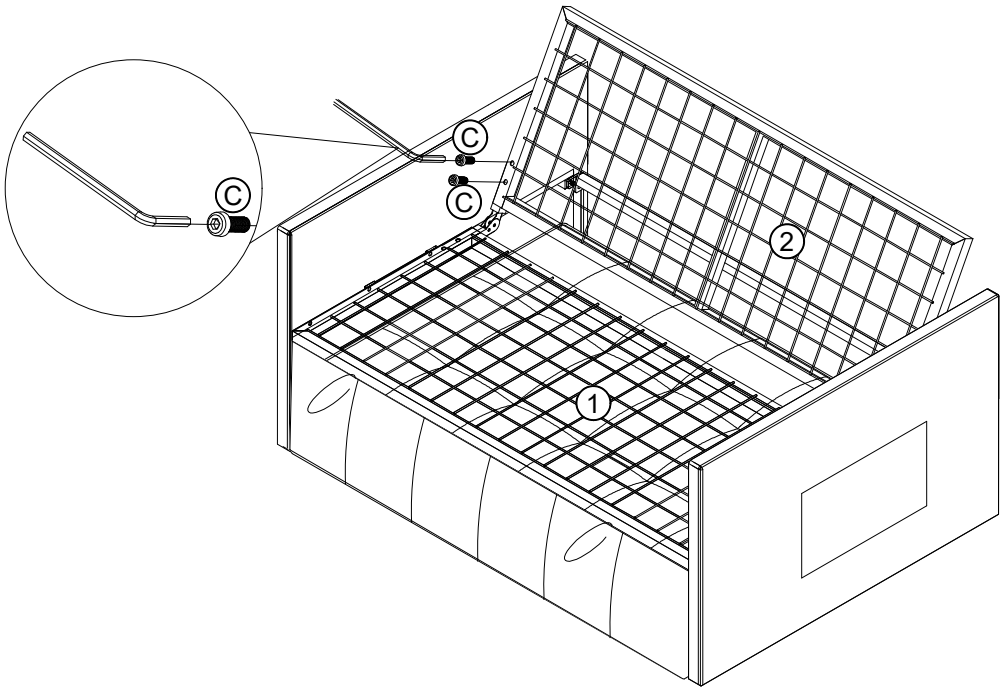

ⒸX 4

Step 14: Cover the cushions on frame as per following steps.

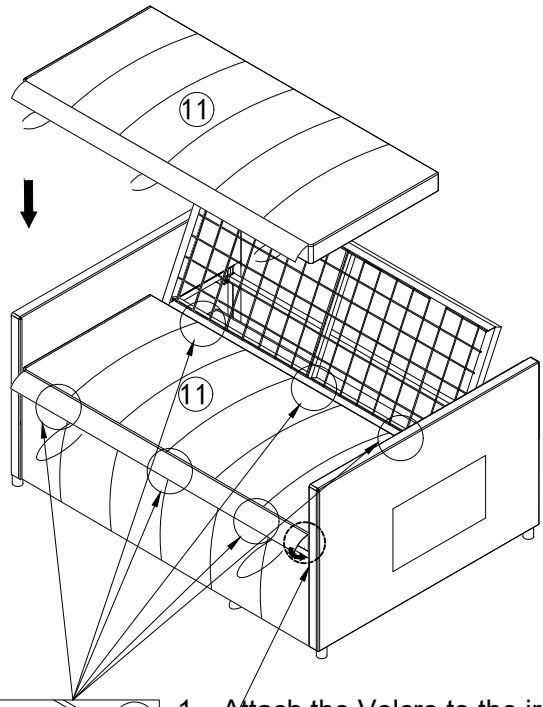

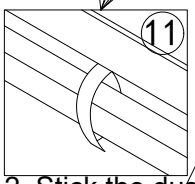

1，Attach the Velcro to the iron frame fixed seat cover.

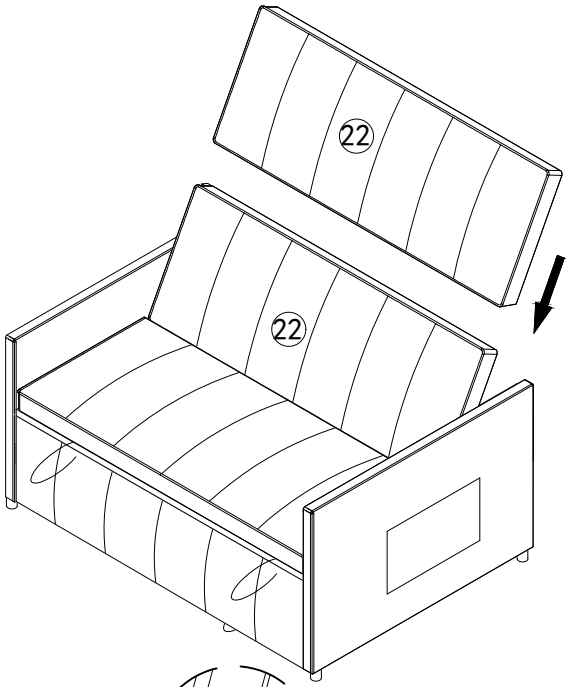

2, Stick the dust cover onto the iron frame.

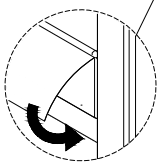

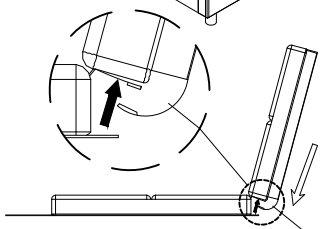

3,Cover on the metal back frame.

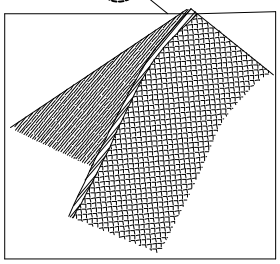

Stick the Hook & Loop on cover.

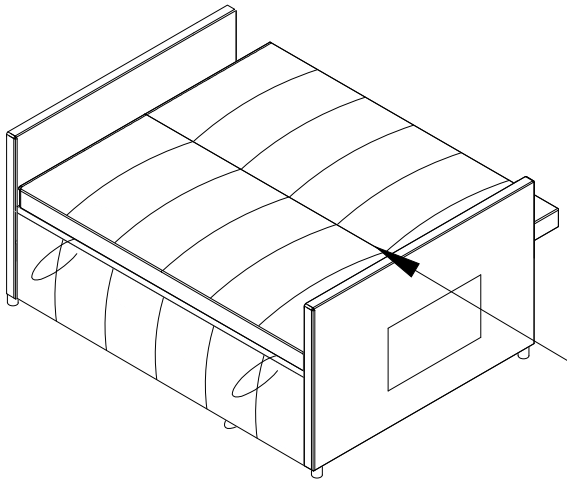

4, Zip the cushion.

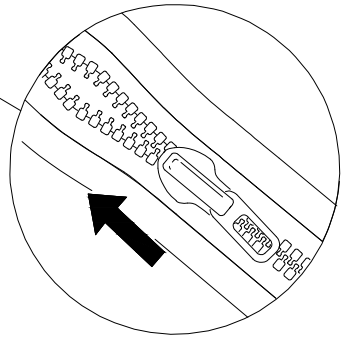

Step 15: Put the cushions (18) on sofa and the assembly is complete.

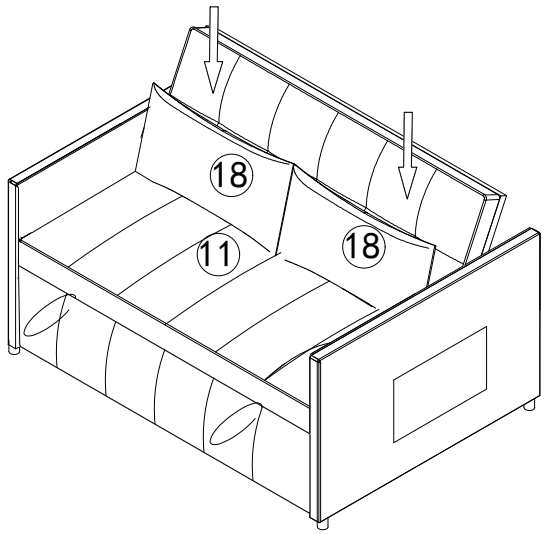

Step 16: Lift up the pull-out-frame by straps,
and then press down to make it align with to the seat.

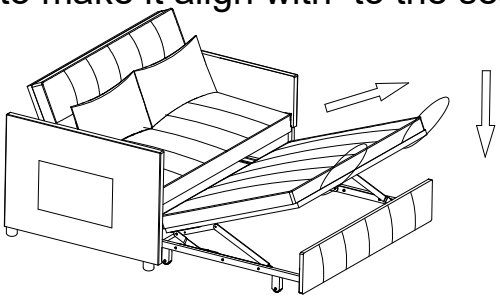

Step 17: The backrest can be adjusted to different angles.
The back must be adjusted more than 90˚ to lie flat, and convert to sofa bed.

Unzipping the zipper, you can see the support feet.
Press and hold the button shown
to open and retract the backrest legs

