Installation Instruction

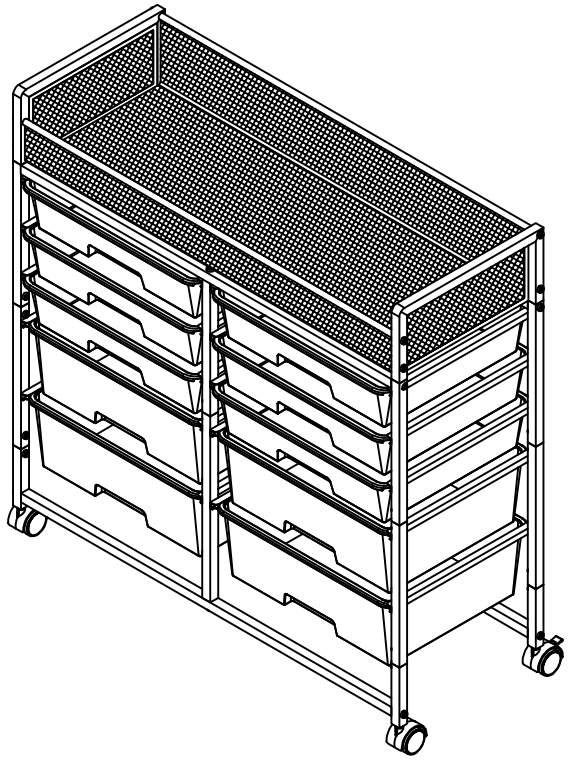

Parts List

A x2	B x2	C x1	D x1	E x1, x1
F x1	G x4	H x4	1 x14	2 x24
3 x16	4 x2 x2 x1	5 x1	6 x6	7 x4

Step 1

Assembly Instruction

Use List

- 1 X4
- 2 X4
- 3 X4
- E X2
- F X1

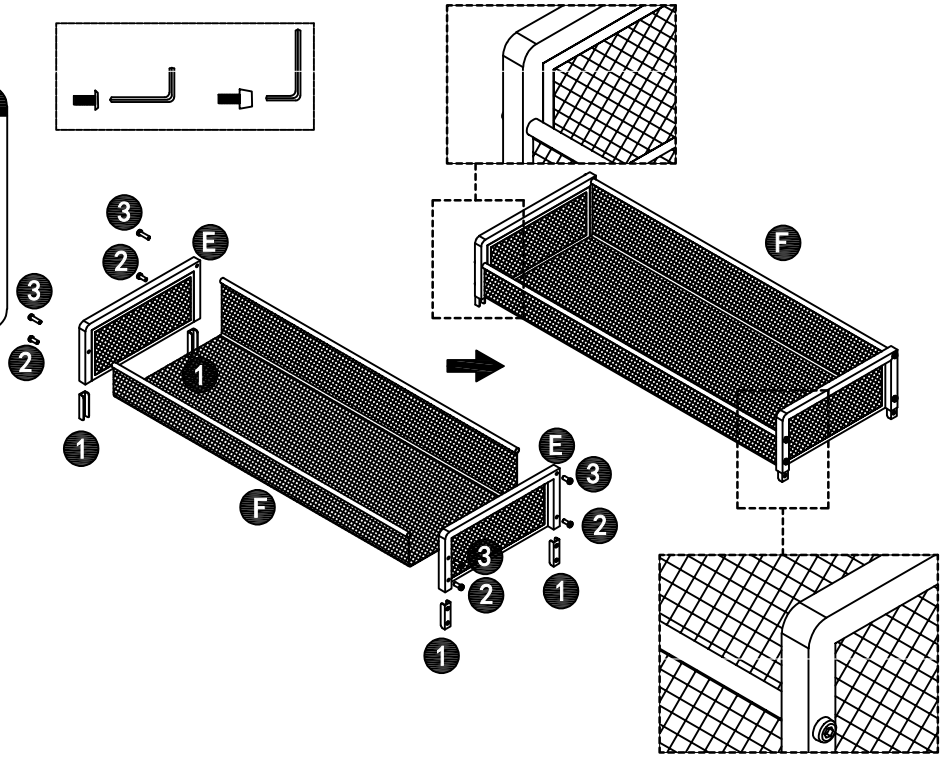

Step 2

Use List

- 1 X4
- 2 X6
- 3 X6
- 4 X2
- B X2
- D X2
- G X2
- H X2

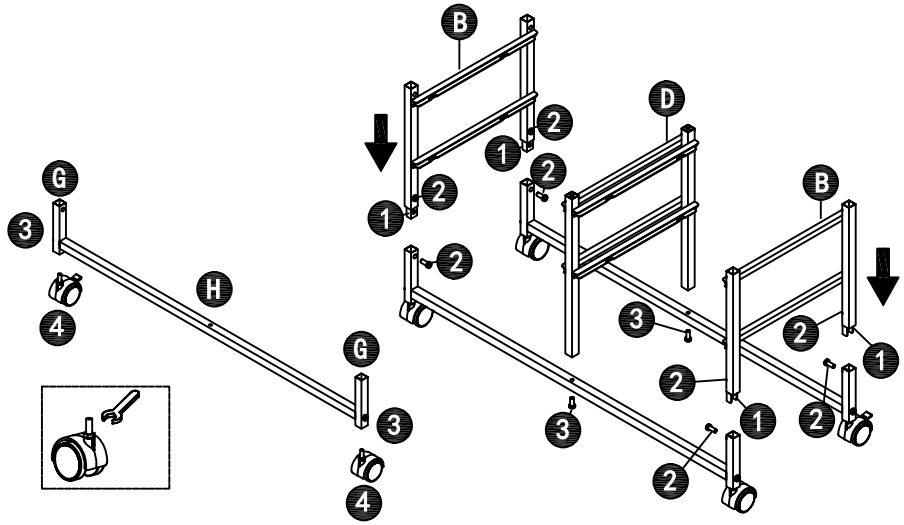

x2

Step 3

Use List
- 1 X6
- 2 X6
- 3 X2
- A X2
- C X1
- H X2

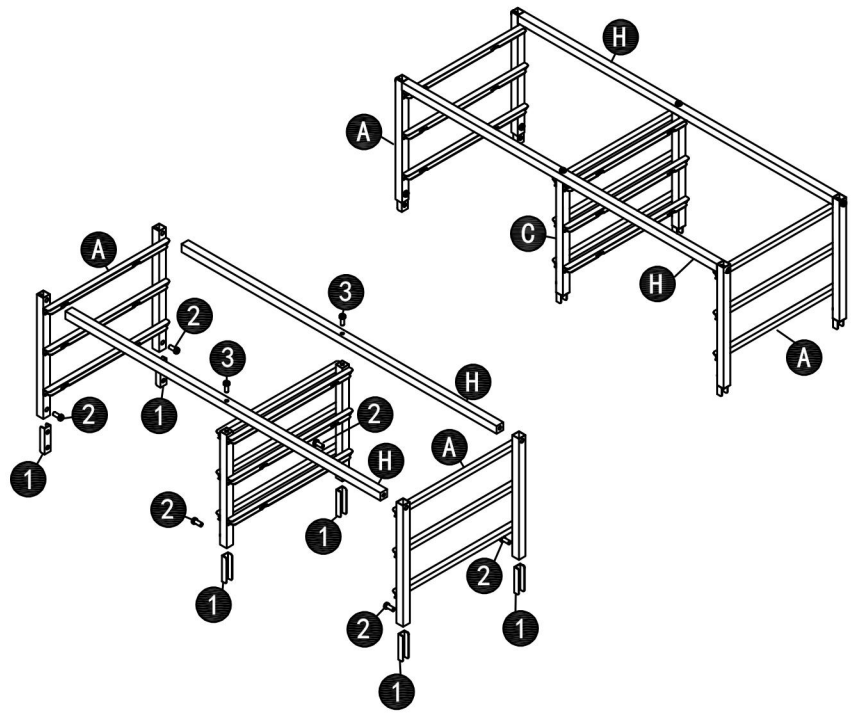

Step 4

Use List
- 2 X6

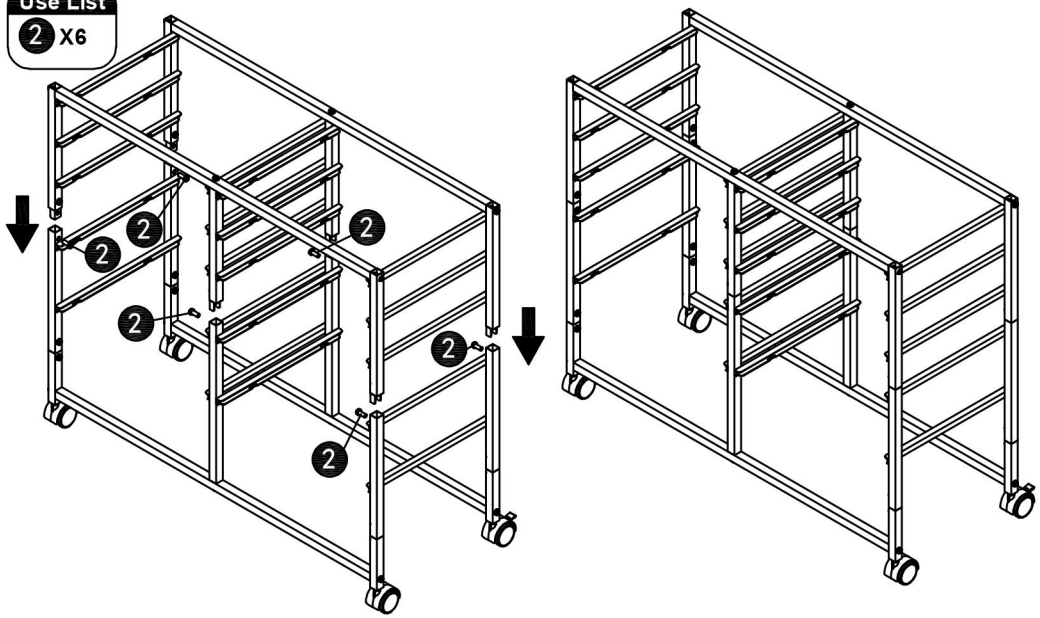

Step 5

Use List
- 3 X4

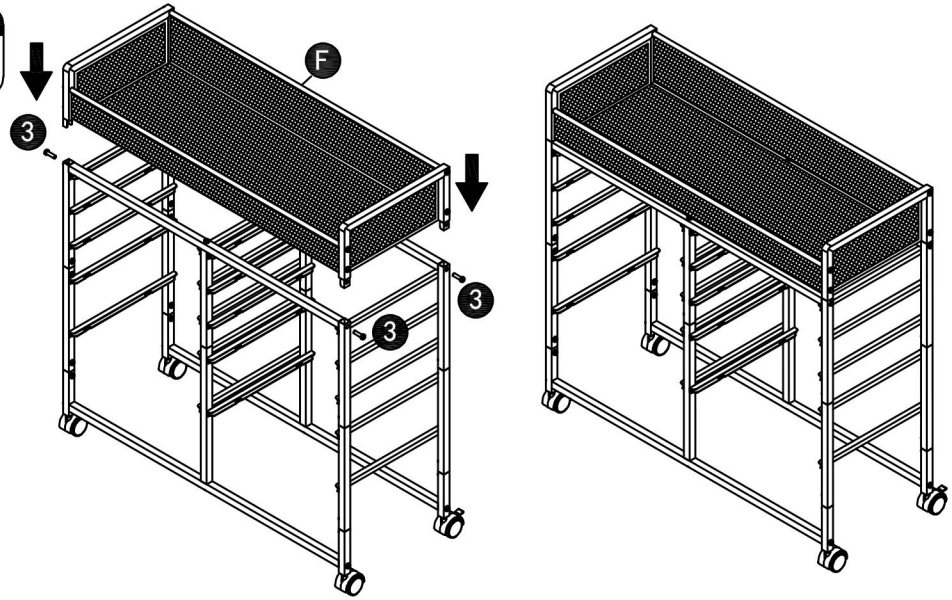

Finished

Use List
- 6 X6
- 7 X4

