Installation

Product Manual

SKU: DS07-002-MT

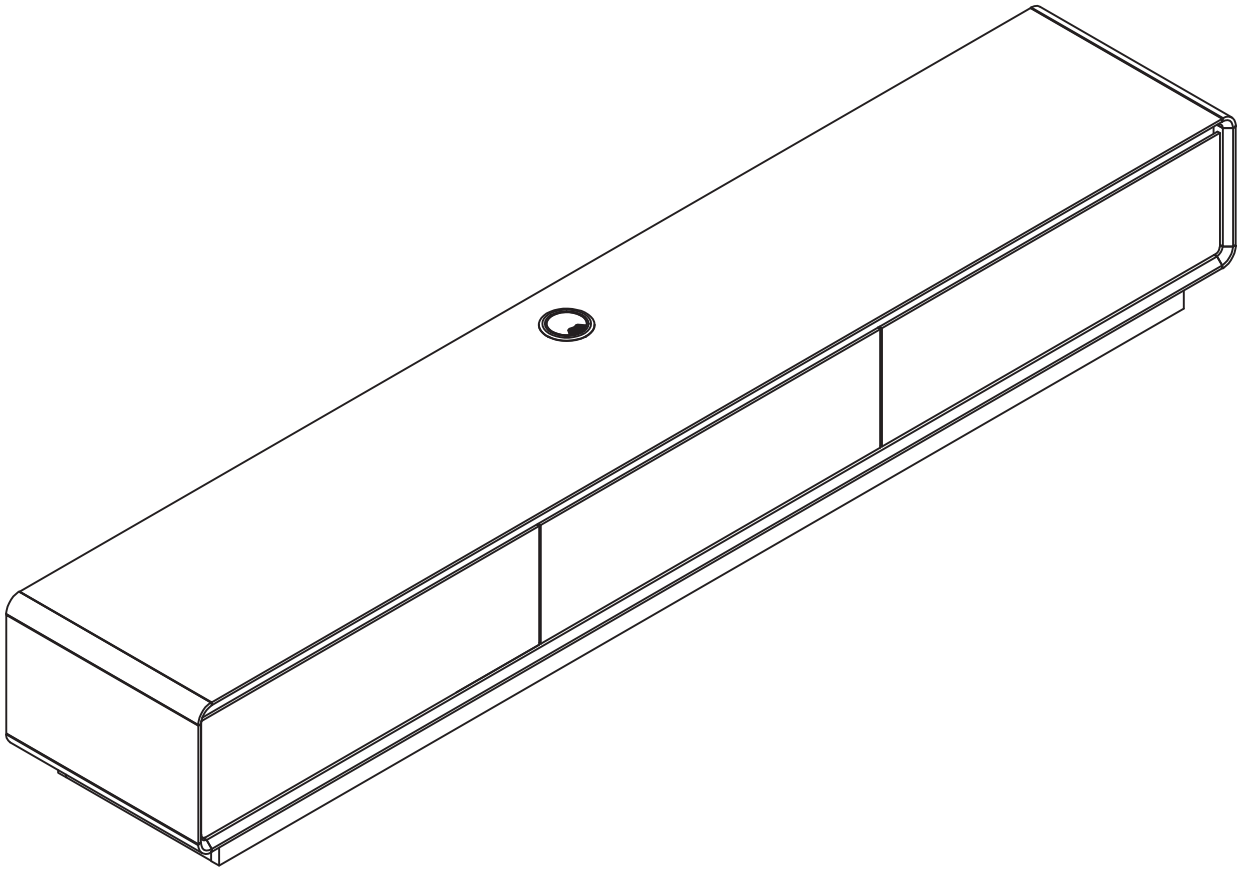

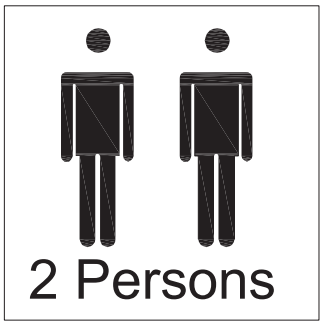

Tools

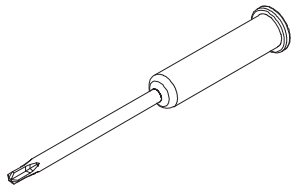

Cross Screwdriver

If you have any questions or concerns, please contact us:
Kevencindyyy@outlook.com

Hardware List

Tip: To avoid installation issues caused by missing parts, some spare parts are provided as backup

A	82 PCS
15*11mm	

B	82 PCS
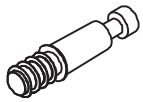	
6*25mm	

C	26 PCS
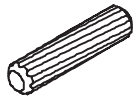	
8*30mm	

D	6 PCS
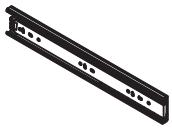	
12"	

E	24 PCS
M4*14mm	

F	36 PCS
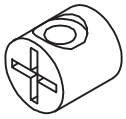	
9*9mm	

G	36 PCS
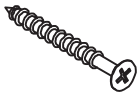	
M5*50mm	

H	13 PCS
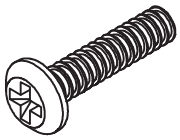	
M6*25mm	

I	8 PCS
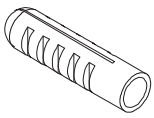	
8*38mm	

J	4 PCS
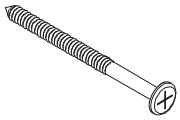	
M4*30mm	

K	8 PCS
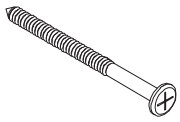	
M4*50mm	

L	1 PCS
60mm	

M	Spare Parts		
A*4	B*4	C*2	E*6
F*3	G*2	H*1	I*1
J*1	K*1		

Accessory D is not in the accessory bag but in the package due to its size

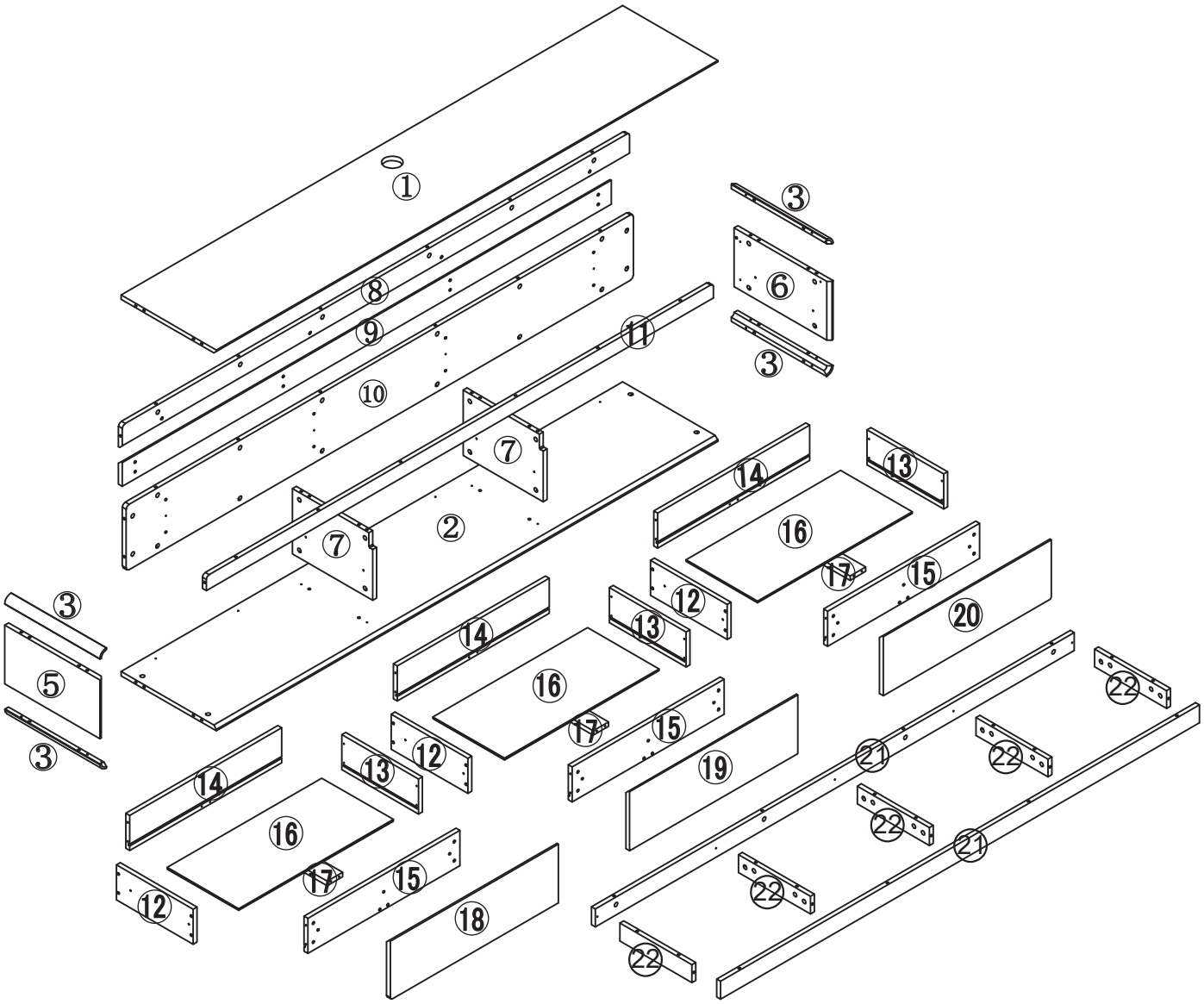

1 — 1 PC	2 — 1 PC	3 — 4 PCS	5 — 1 PC	6 — 1 PC
7 — 2 PCS	8 — 1 PC	9 — 1 PC	10 — 1 PC	11 — 1 PC
12 — 3 PCS	13 — 3 PCS	14 — 3 PCS	15 — 3 PCS	16 — 3 PCS
17 — 3 PCS	18 — 1 PC	19 — 1 PC	20 — 1 PC	21 — 2 PCS
22 — 5 PCS				

Matters Need Attention

If you have any questions or concerns, please contact us:
Kevencindyyy@outlook.com

During Installation

1. Do not discard packing material until assembly is complete, as small parts may loosen inside the carton during shipping. If there is a missing part, please contact our after-sales team.
2. Please assemble this item on soft surfaces such as carpets to protect the finish.
3. Pay attention to stability when assembling to avoid falling or scratching.

Cleaning and Maintenance

1. To protect the finish, avoid chemicals and household cleaners.
2. Keep away from the heat source to prolong the service life.
3. Wipe off any remaining liquid on the surface with a damp cloth.

Main Frame Assembly(STEP 1- STEP 18)

STEP 1 Split all 6 accessories D into D1 and D2 as shown.
They will be installed separately in later steps

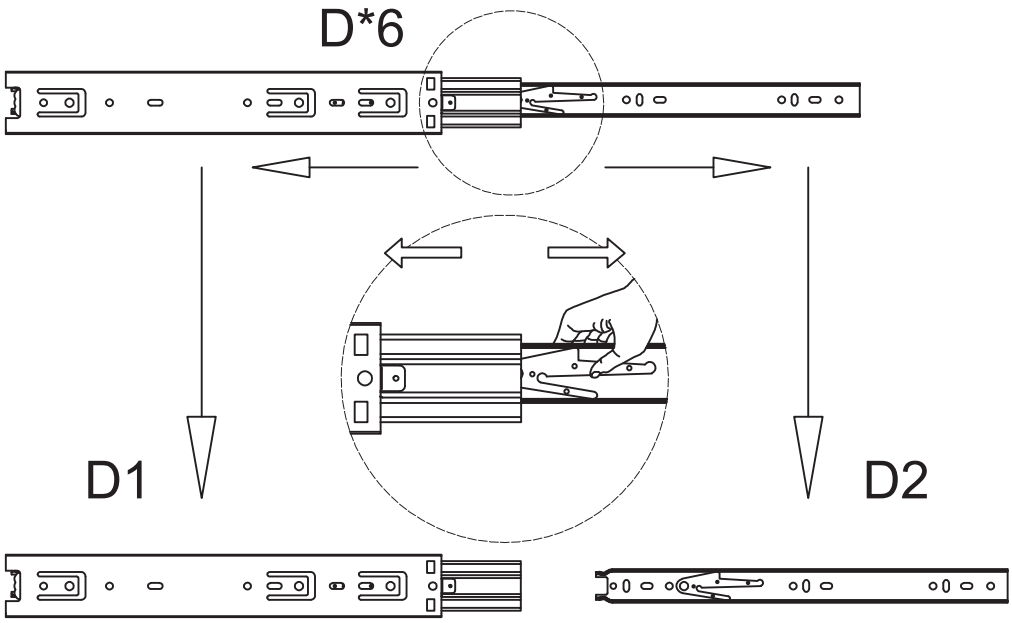

D	6 PCS
12"	

STEP 2 Install accessories D1 on both sides of board 7

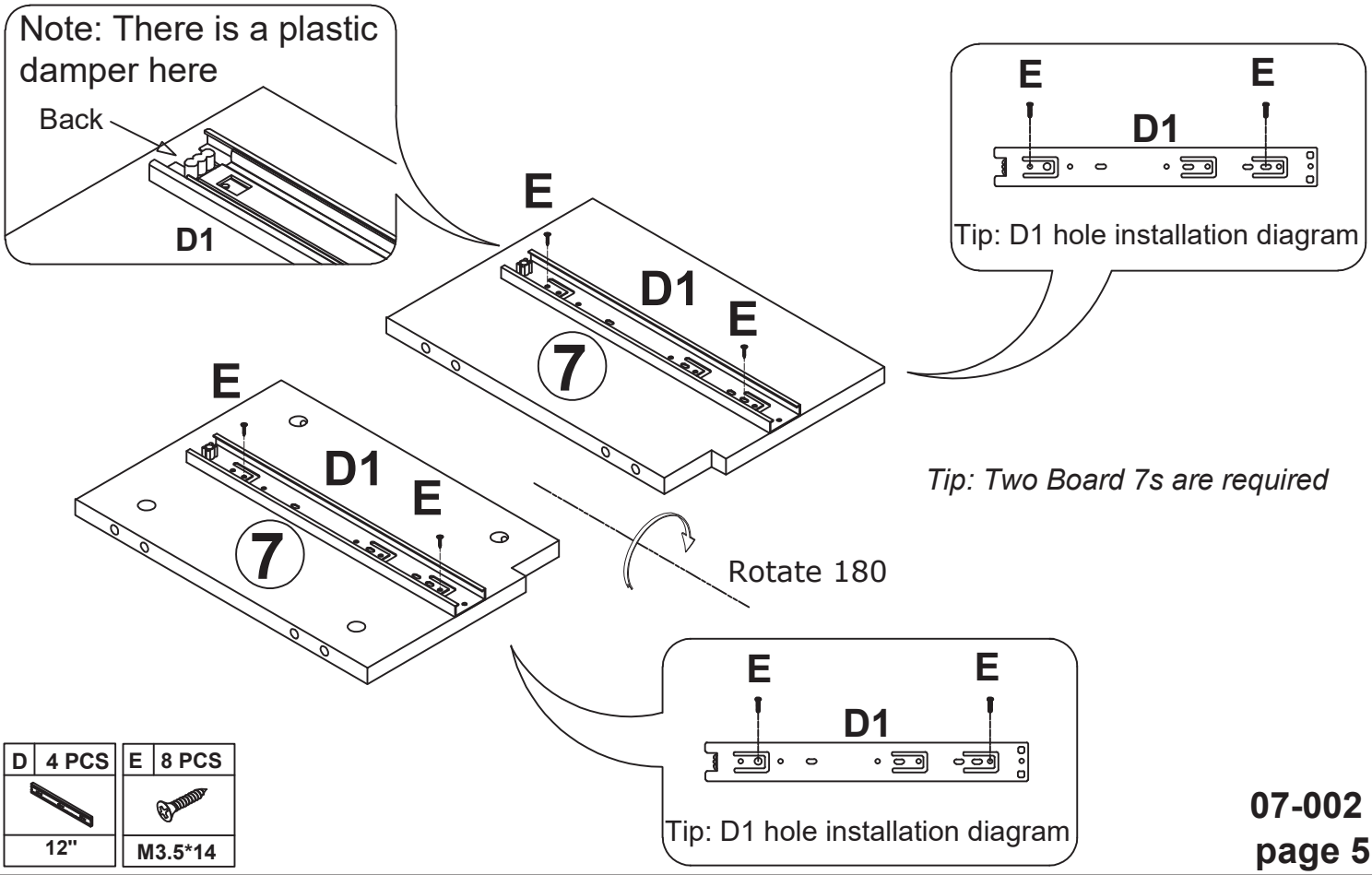

D	4 PCS	E	8 PCS
12"		M3.5*14	

STEP 3

Attach accessories B and C to board 2

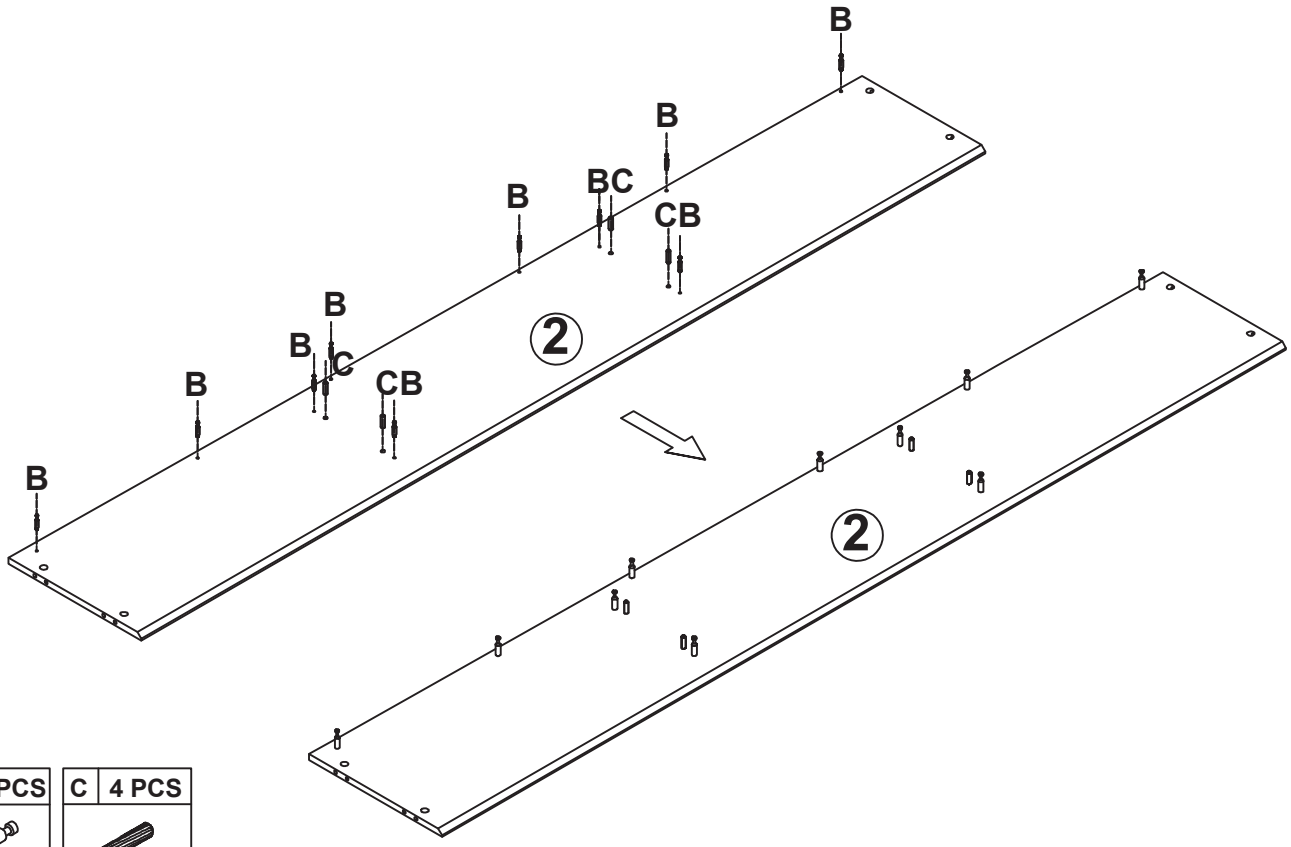

B	10 PCS
6*25mm	

C	4 PCS
8*30mm	

STEP 4

Install board 7 onto board 2 and secure with accessory A

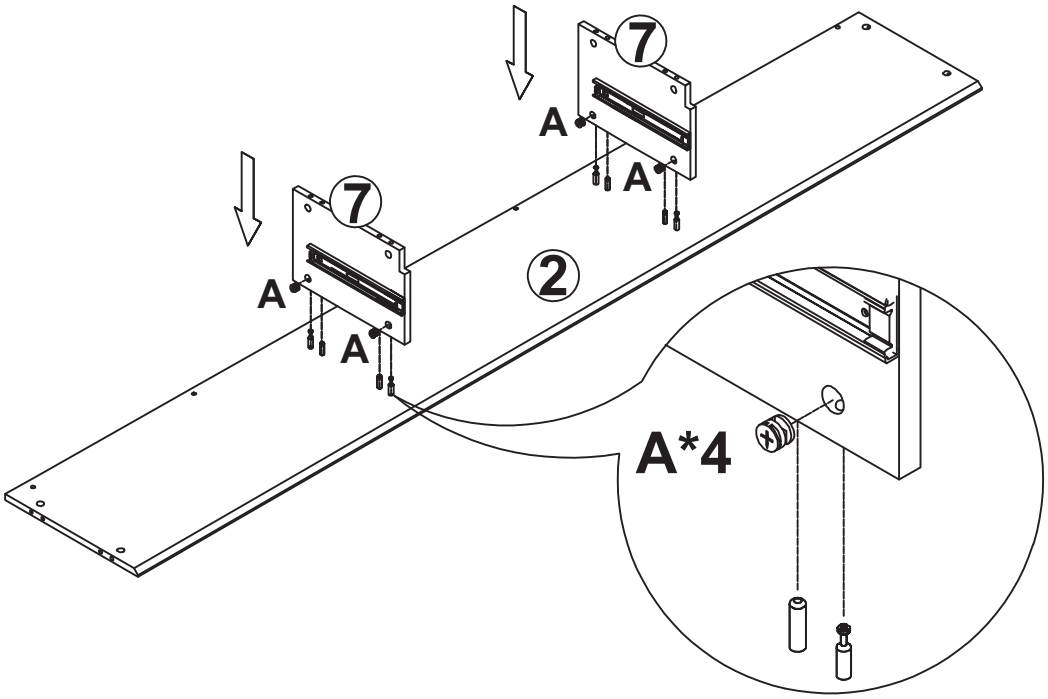

A	4 PCS
15*12mm	

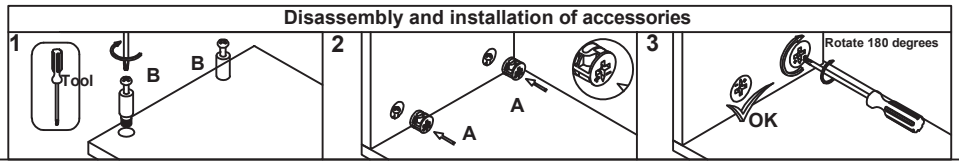

STEP 5

Install board 10 onto board 2 and secure with accessory A

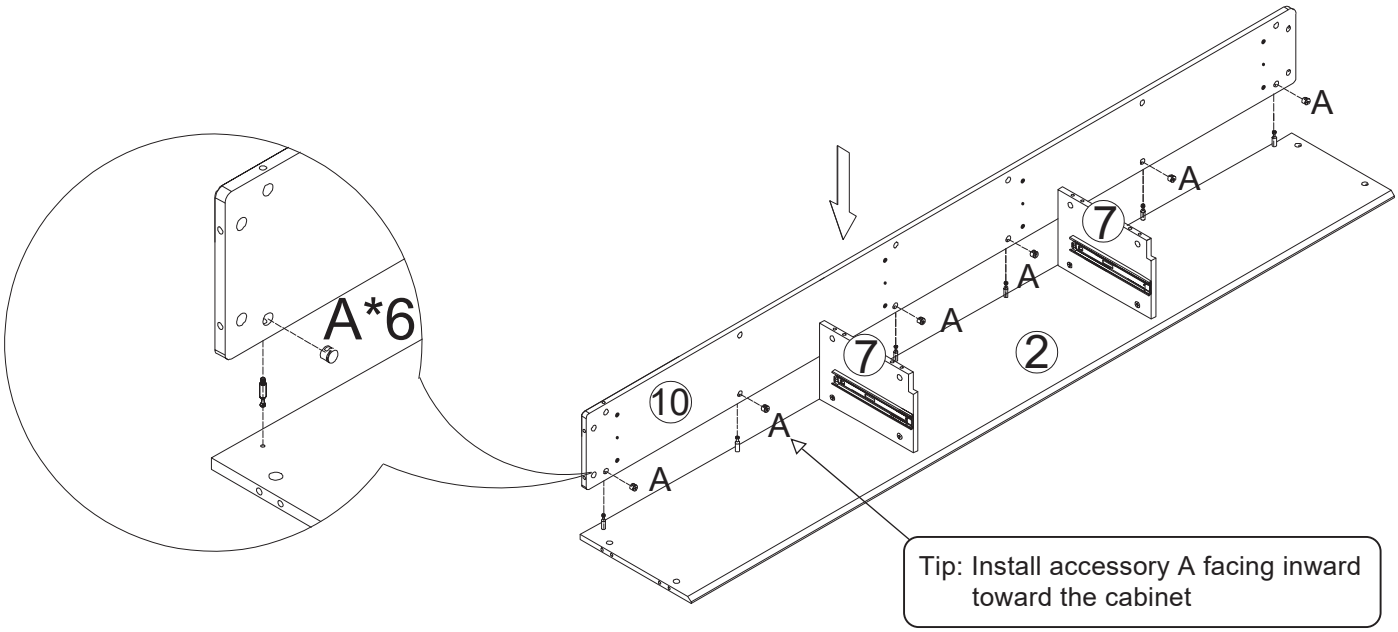

A	6 PCS
15*12mm	

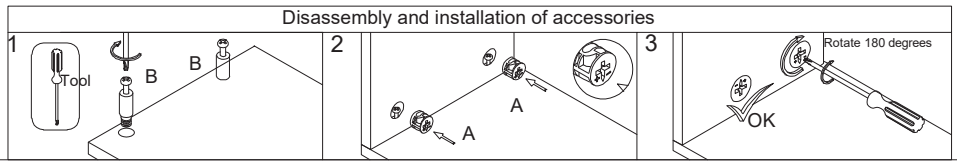

STEP 6

Attach accessories C to board 7

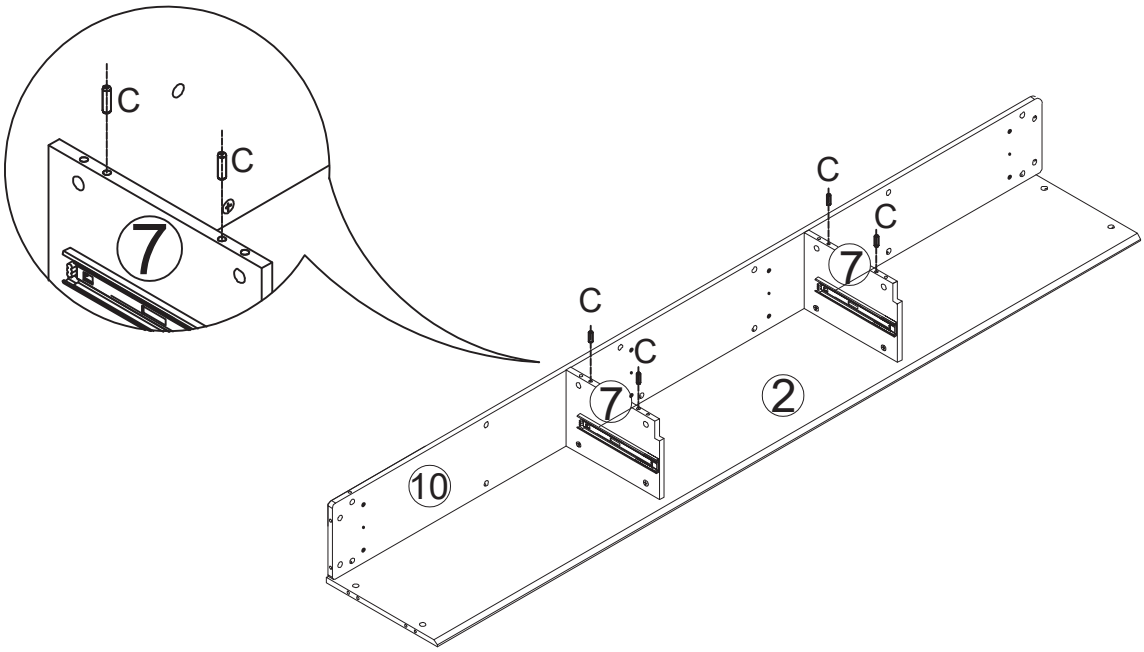

C	4 PCS
8*30mm	

STEP 7

Attach accessories B to board 1

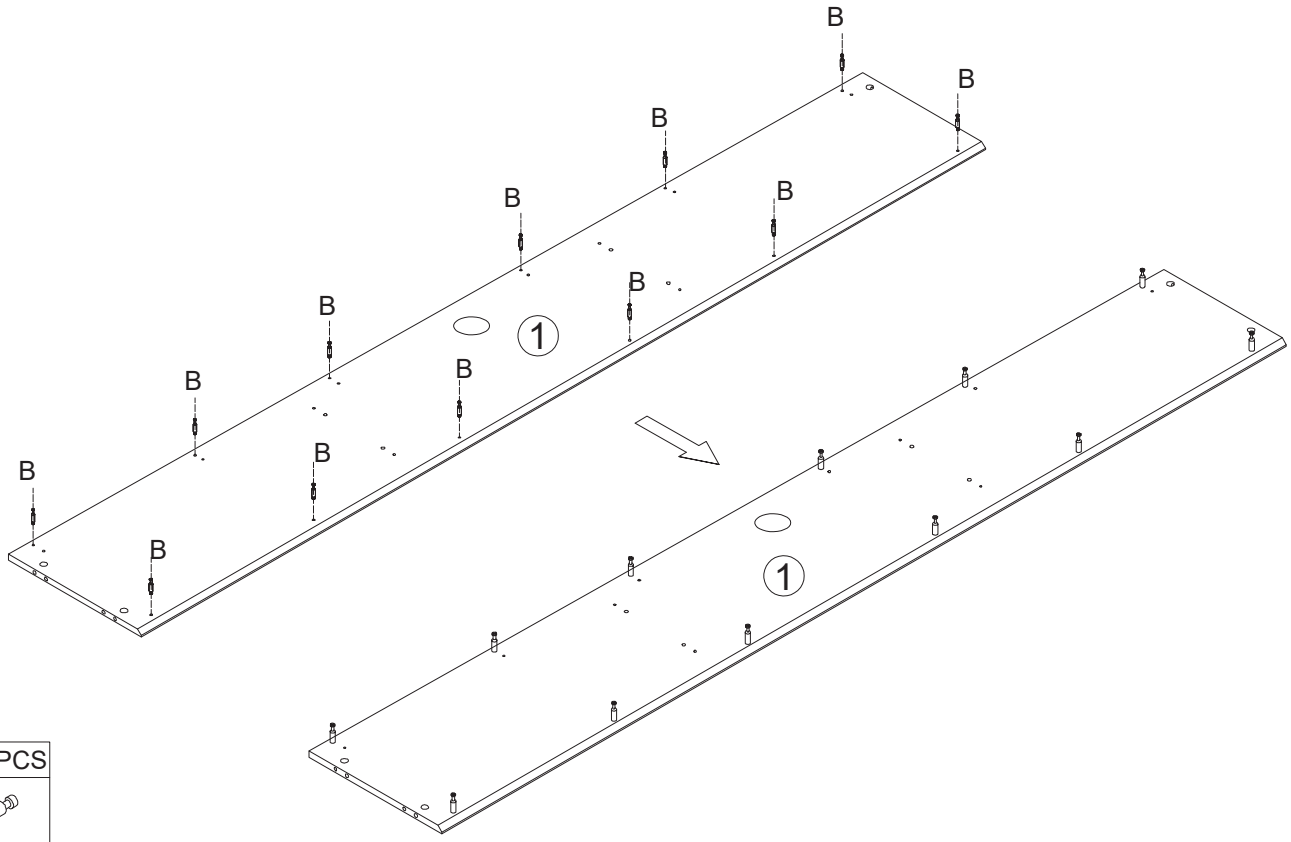

B	12 PCS
6*25mm	

STEP 8

Install boards 8 and 11 onto board 1, and secure with accessory A. Attach accessory C to both sides of board 8

Note: Board 8 has a beveled edge, which should face Board 11 during assembly. Incorrect orientation will affect the wall mounting of the TV stand

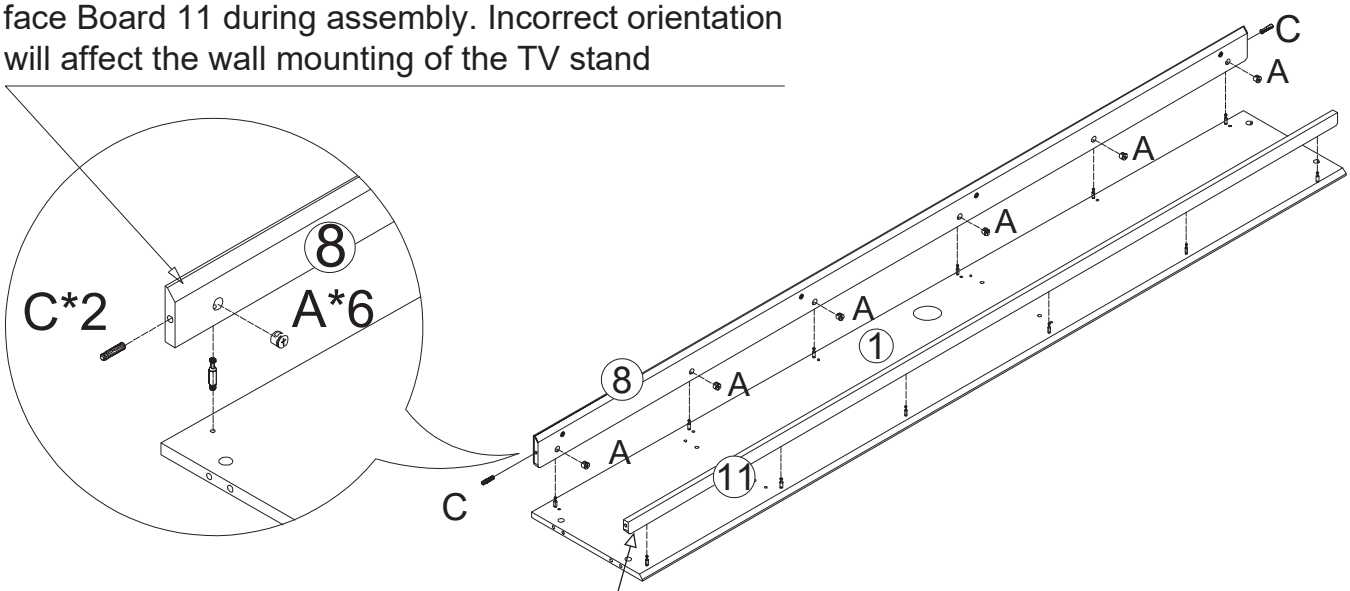

Tip: Install the Accessory A on Board 11 facing toward Board 8

A	12 PCS
15*12mm	

C	2 PCS
8*30mm	

STEP 9

Attach accessories B to board 1

Note: For safer and smoother assembly, please do not attach accessories C to board 1 at this step

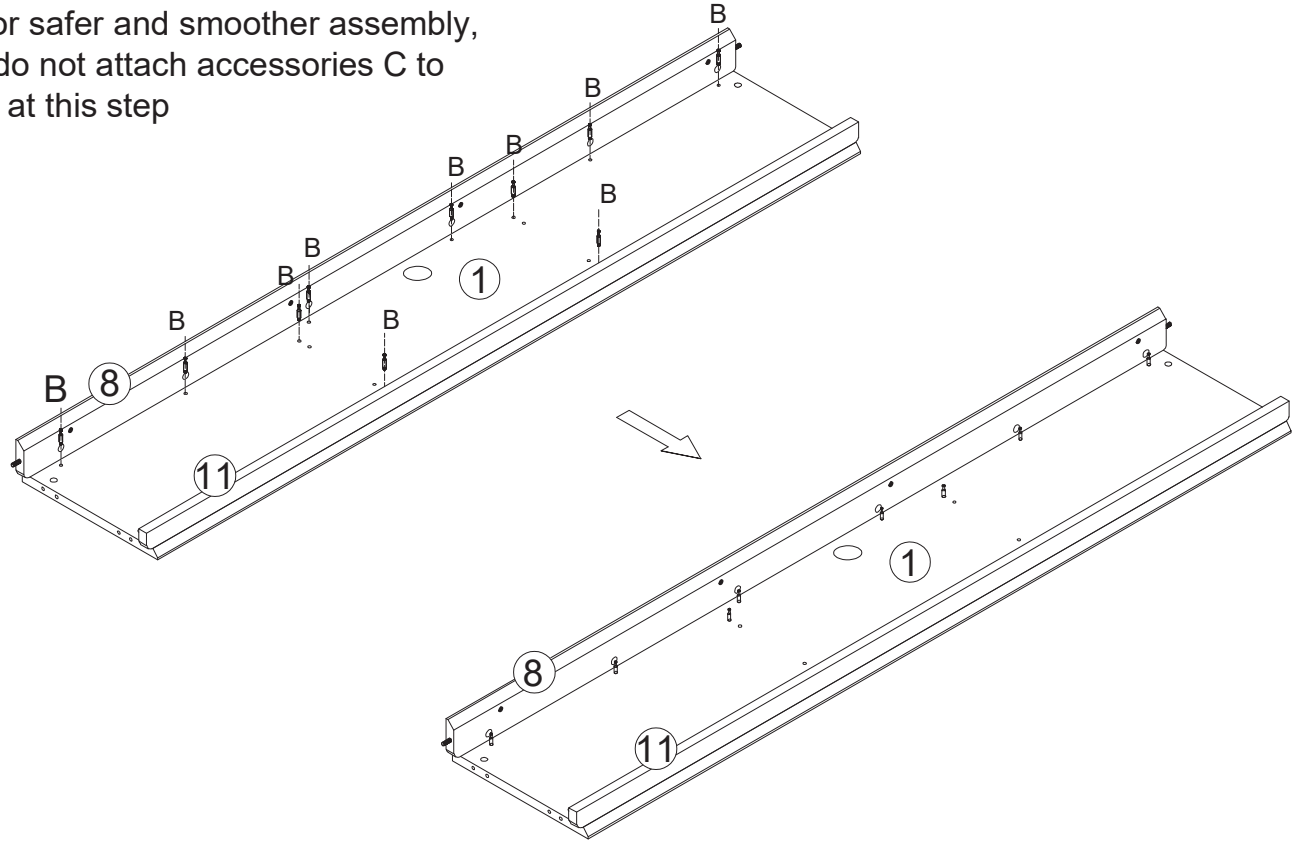

B	10 PCS
6*25mm	

STEP 10

Install boards 1, 8, and 11 onto boards 7 and 10. Secure with accessory A

Important Tip: Align all accessories with the holes on the cabinet side panels first, then gently install. Do not force installation, as improper alignment or forcing may damage the panels. Please follow the instructions carefully.

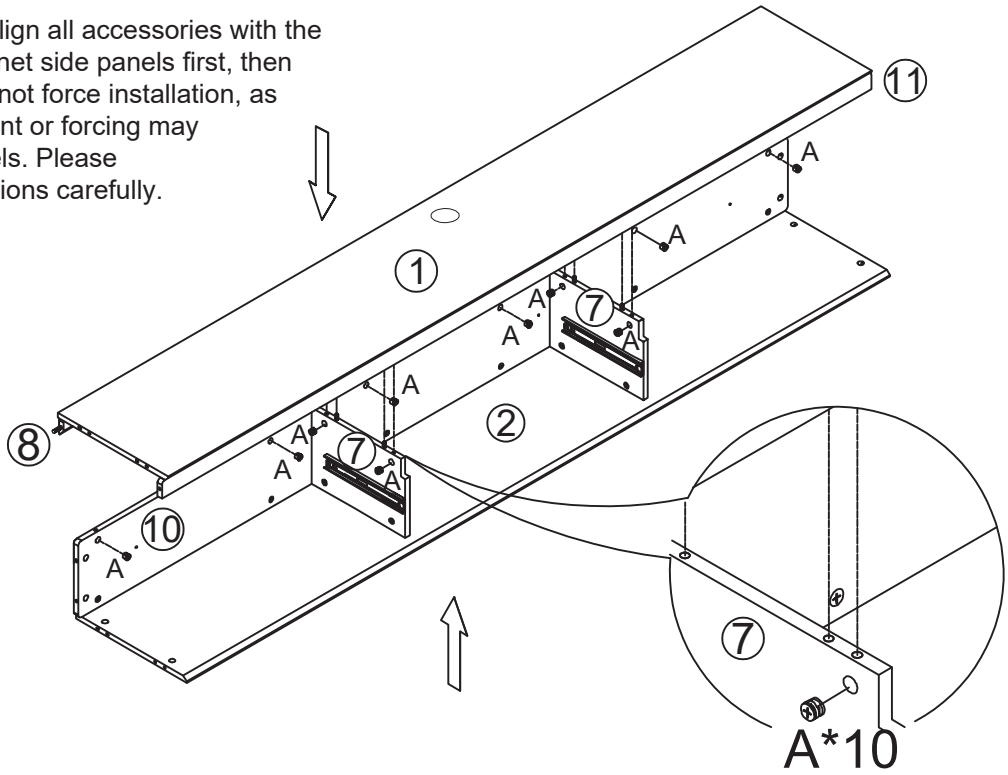

A	10 PCS
15*12mm	

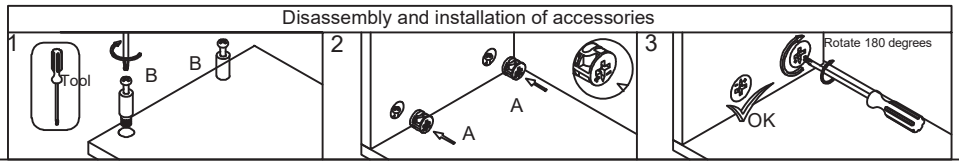

STEP 11 Attach accessory L to board 1, then attach accessory H to board 10 for reinforcement

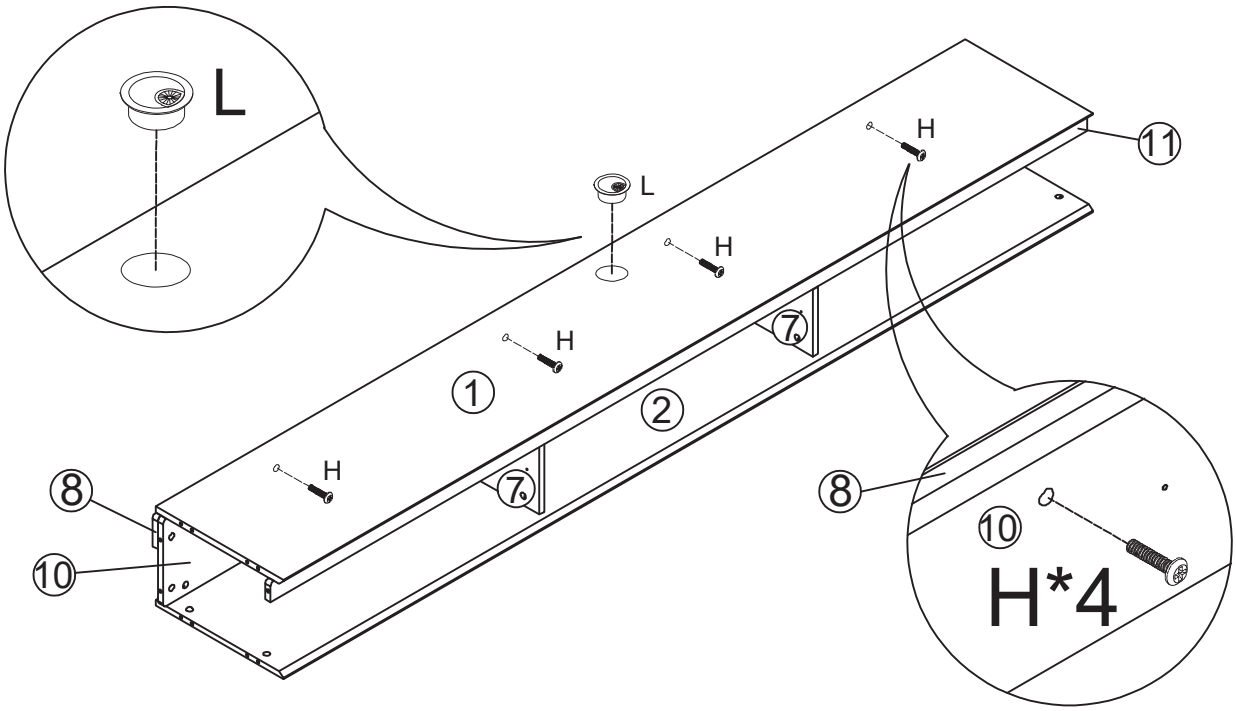

H	4 PCS
M6*25mm	

L	1 PC
60mm	

STEP 12

Attach accessories B to board 3

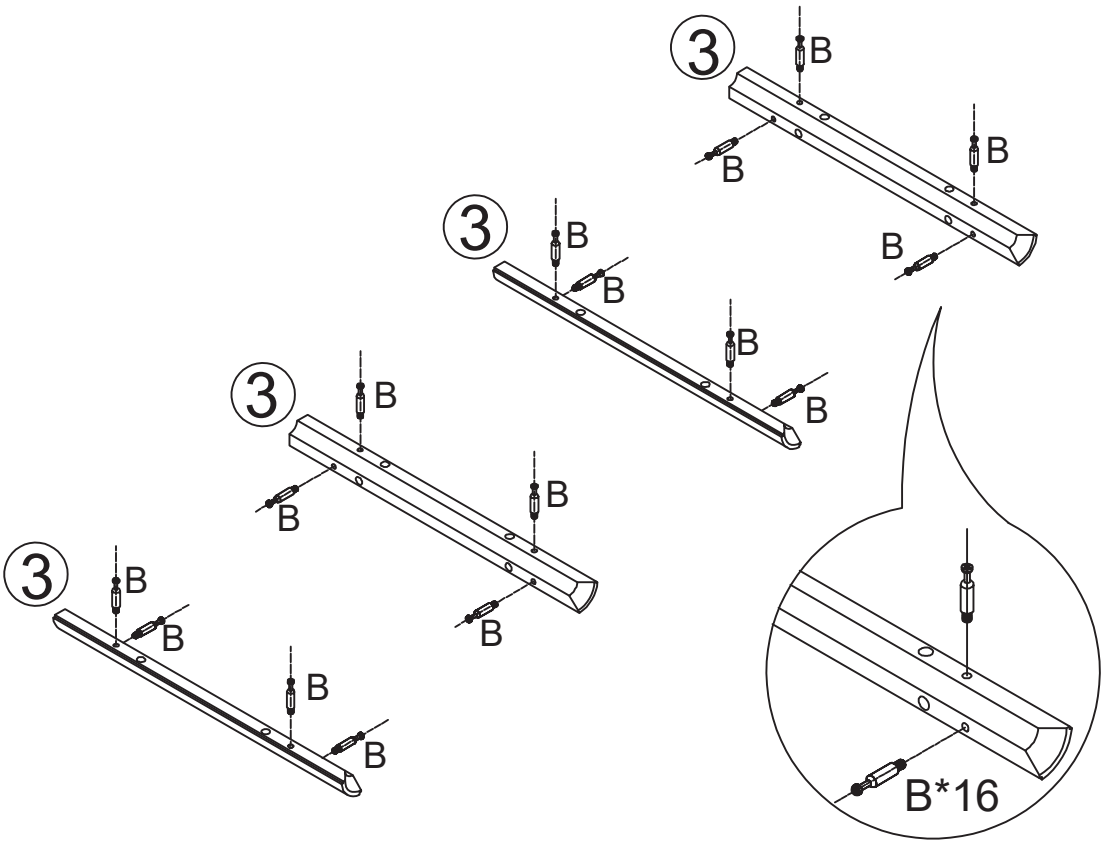

B	16 PCS
6*25mm	

STEP 13 Attach accessories C to boards 5 and 6

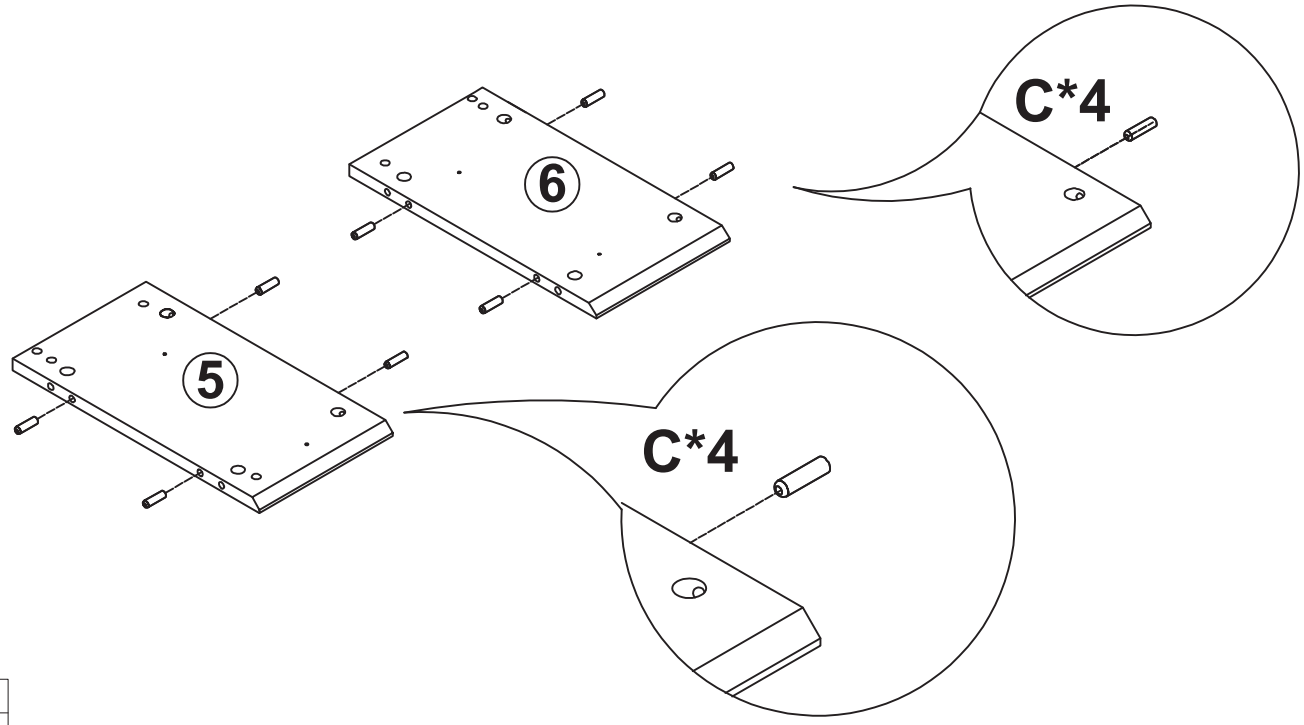

C	8 PCS
8*30mm	

STEP 14 Install board 3 on both sides of boards 5 and 6.Secure with accessory A

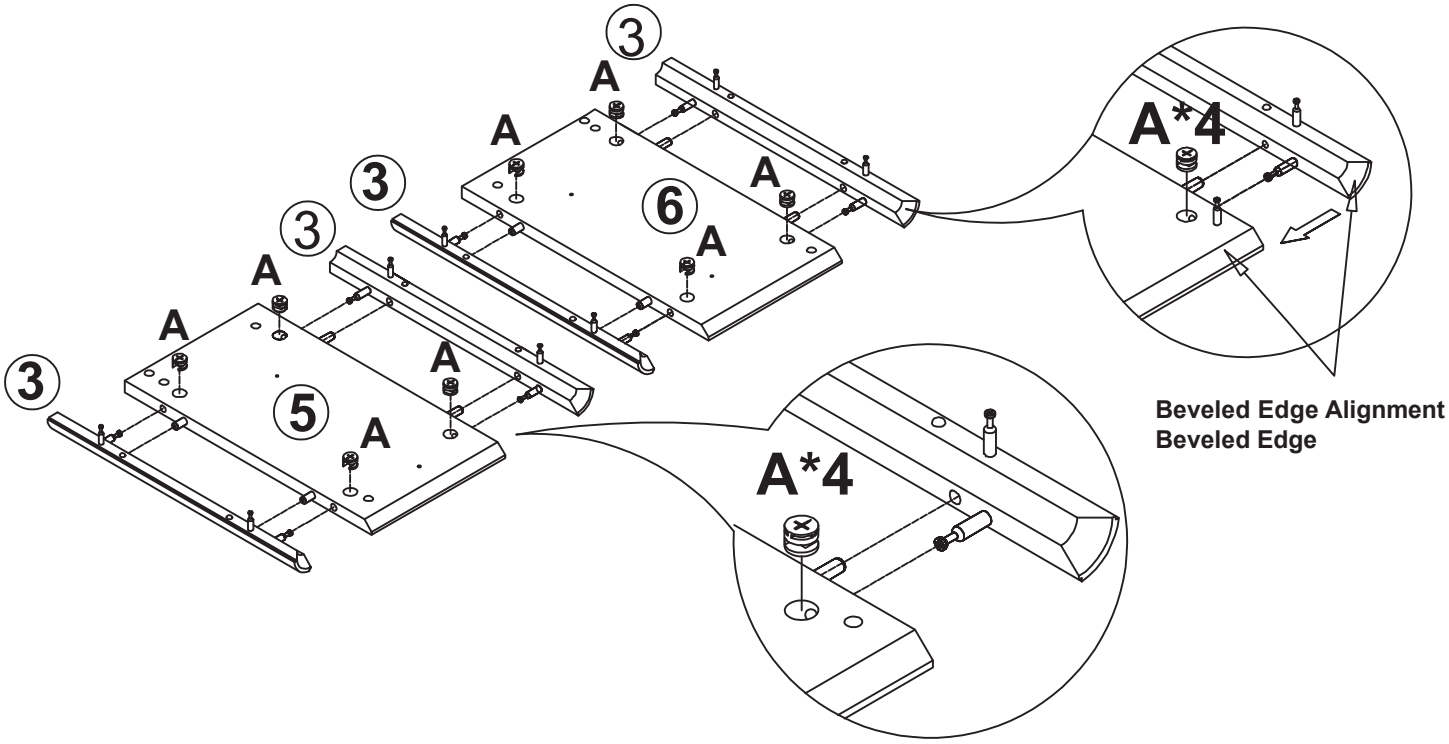

A	8 PCS
15*12mm	

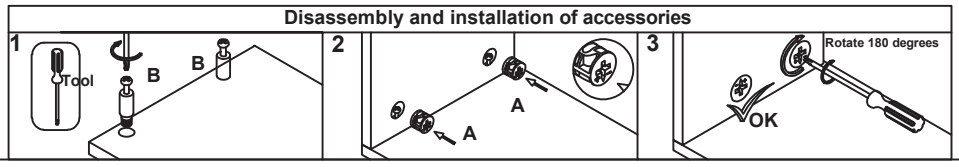

STEP 15

Attach accessory B to boards 5 and 6

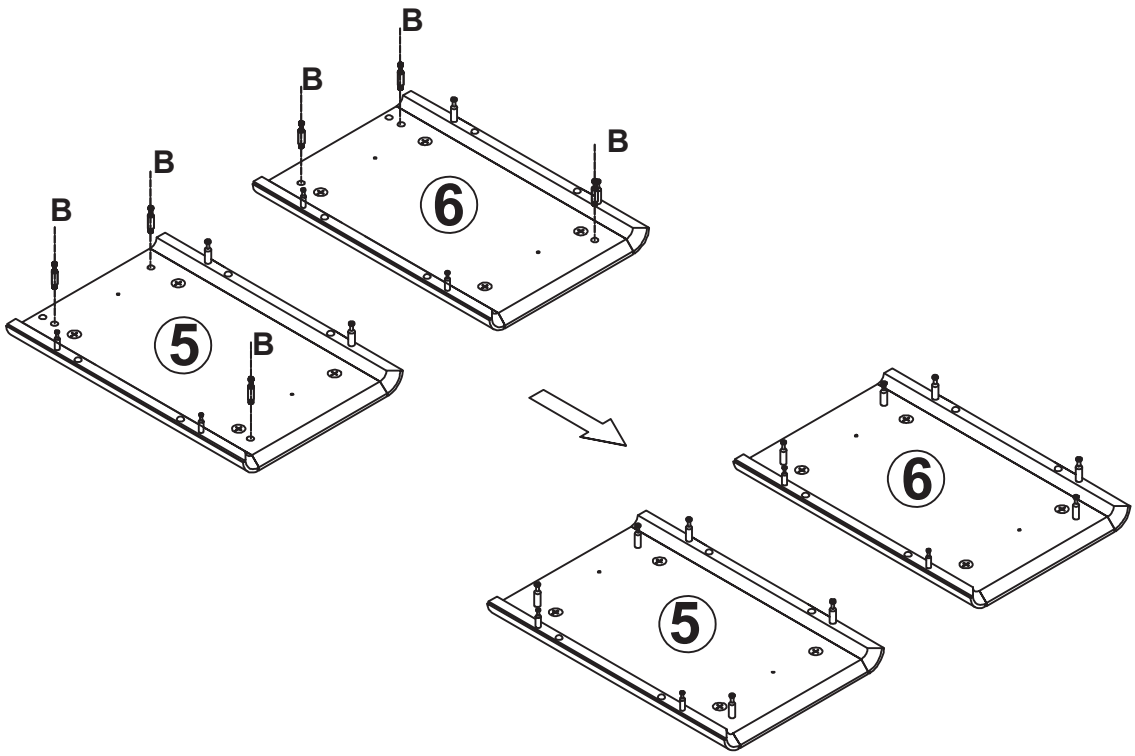

B	6 PCS
6*25mm	

STEP 16

Attach accessory D1 to boards 5 and 6

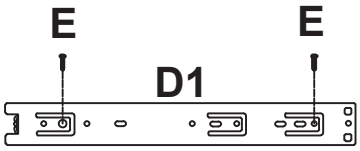

Tip: D1 hole installation diagram

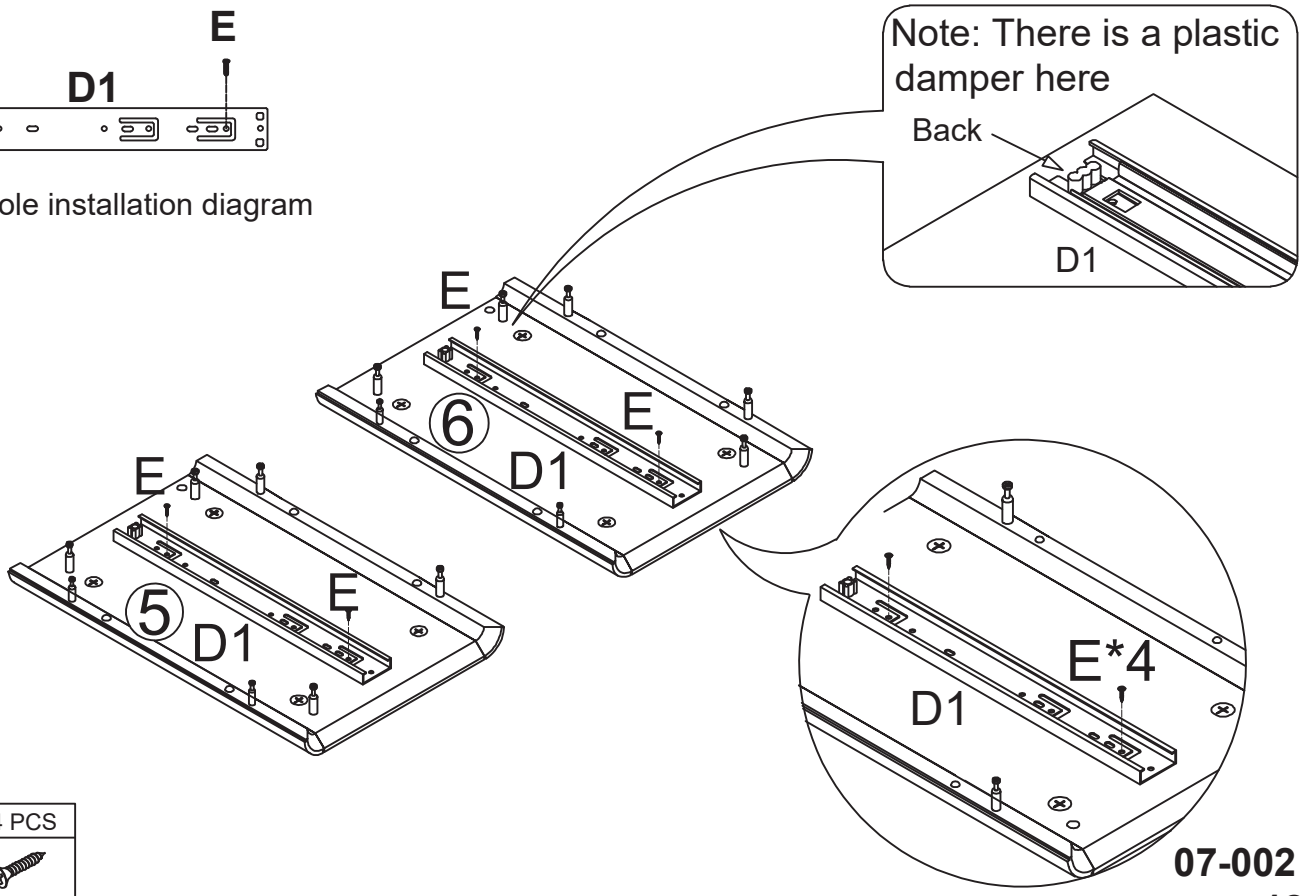

D1	2 PCS
12"	

E	4 PCS
M3.5*14	

STEP 17 Attach accessories C to boards 1 and 2

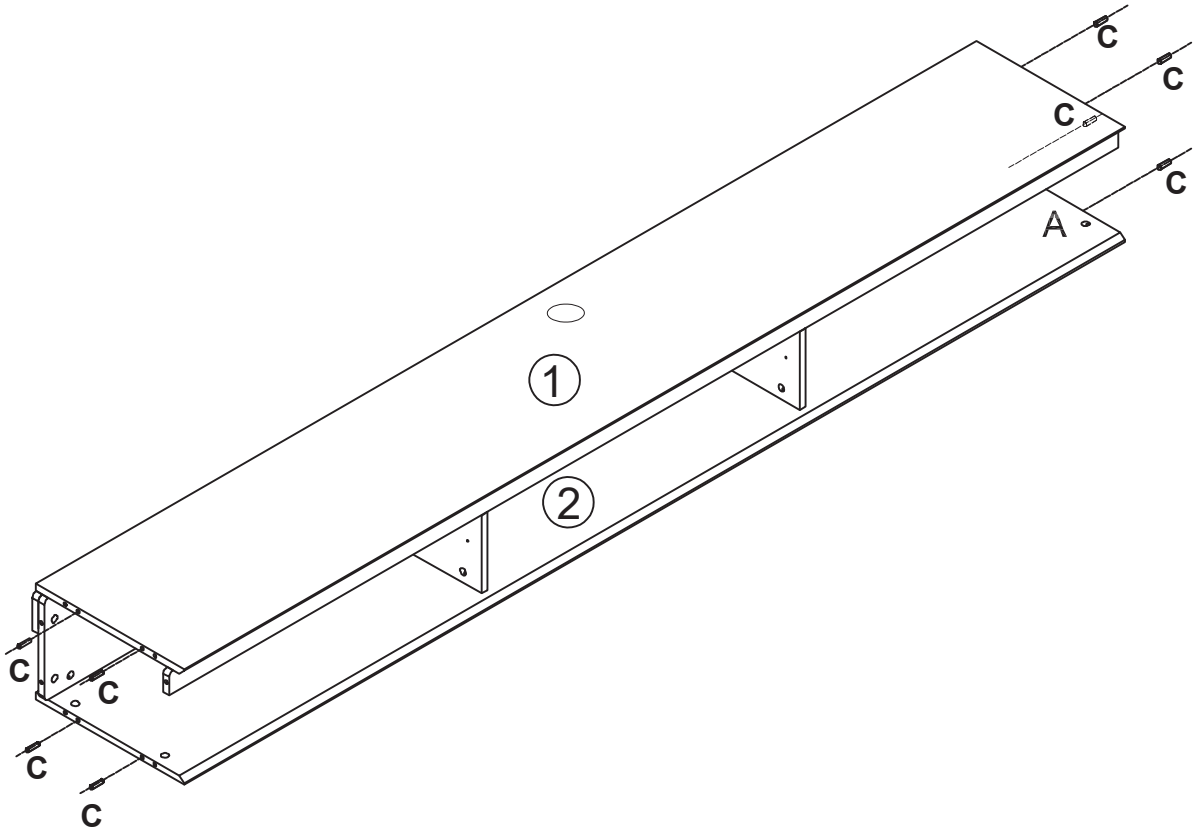

C	8 PCS
8*30mm	

STEP 18 Install boards 5 and 6 on boards 1 and 2. Secure with accessory A

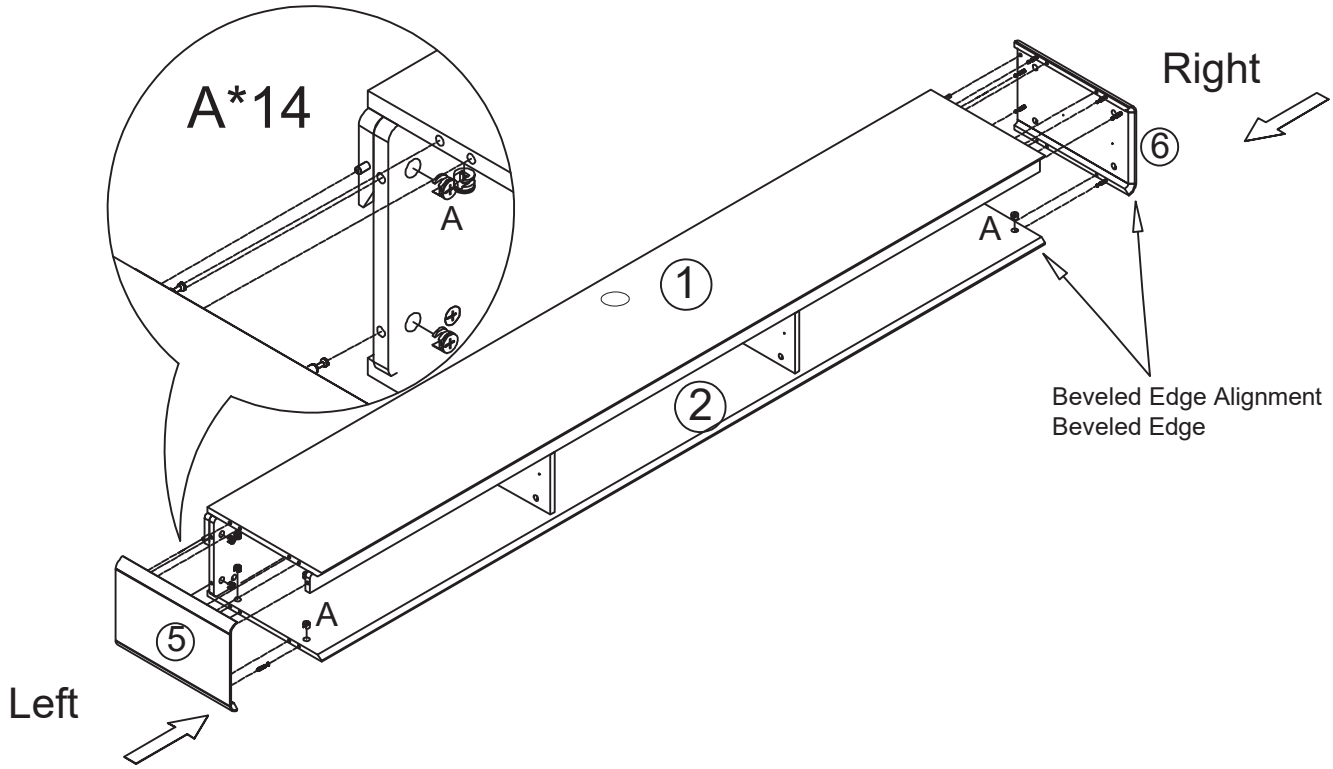

A	14 PCS
15*12mm	

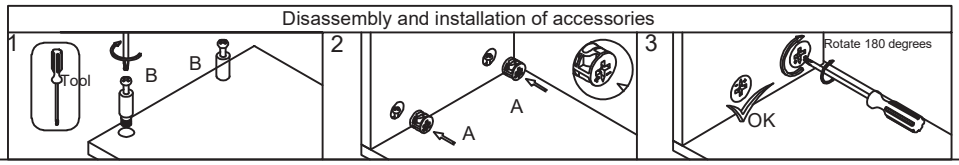

Drawer Assembly(STEP 19- STEP 25)

STEP 19 Install boards 14 and 15 on both sides of board 17.
Secure with accessories F and G

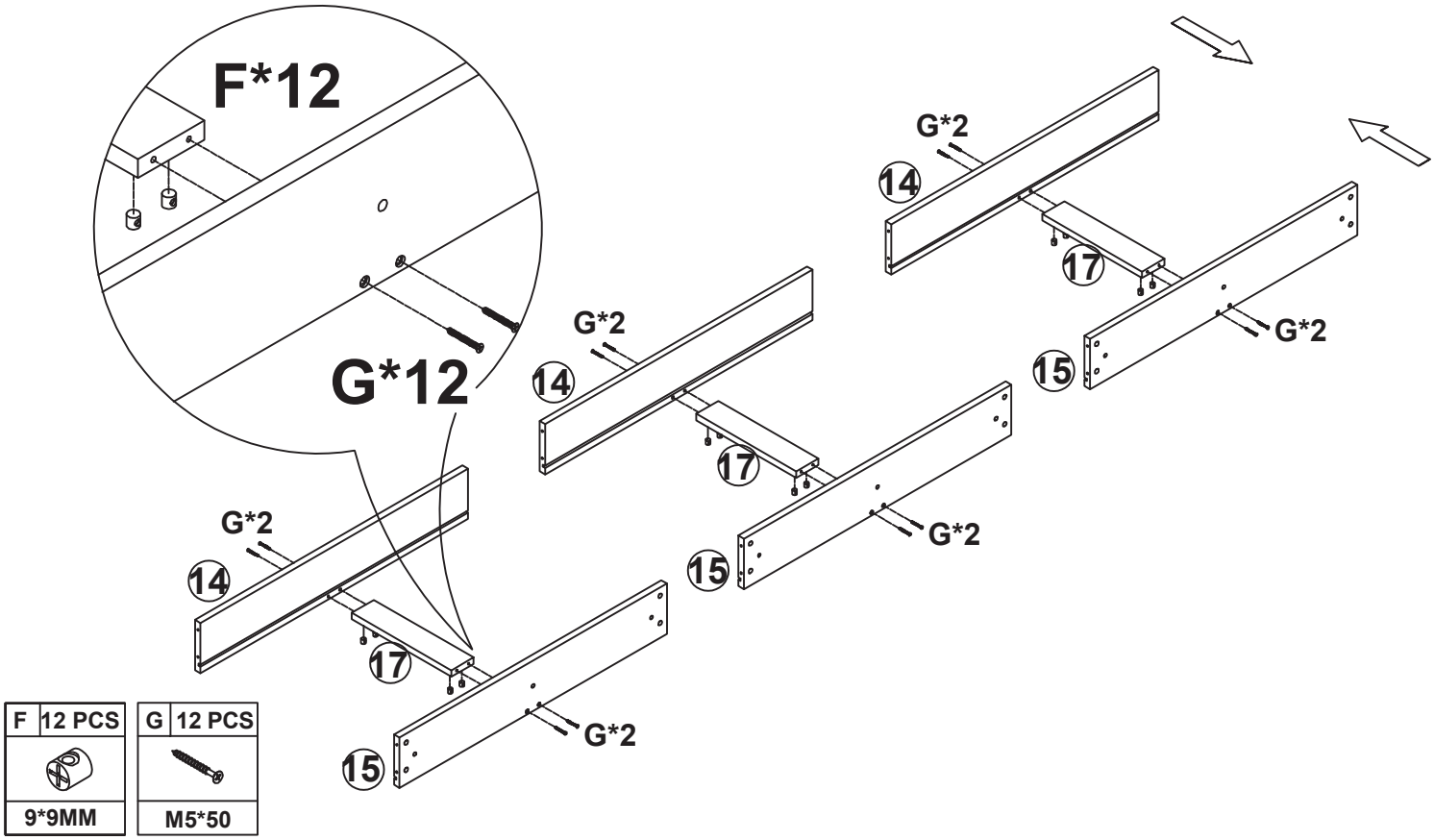

STEP 20 Insert board 16 into the grooves between boards 14 and 15

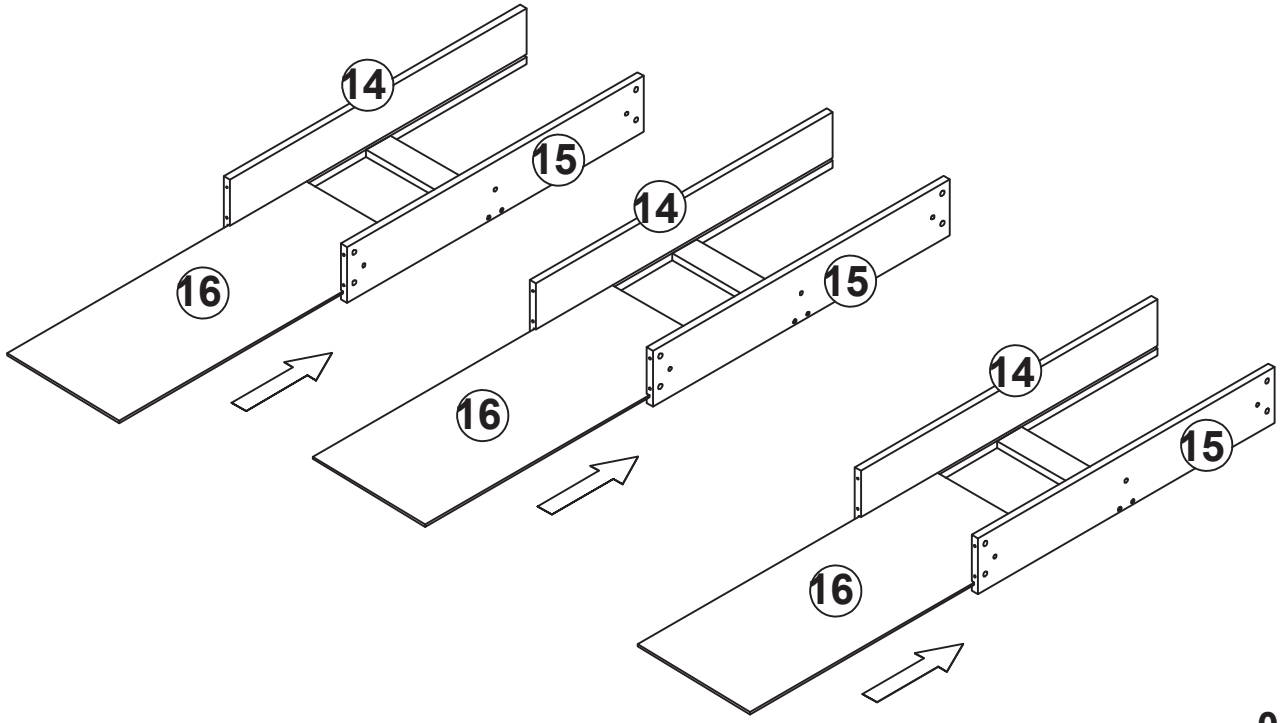

STEP 21

Attach accessory D2 to boards 12

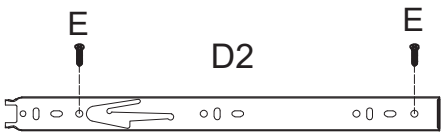

Tip: D2 hole installation diagram

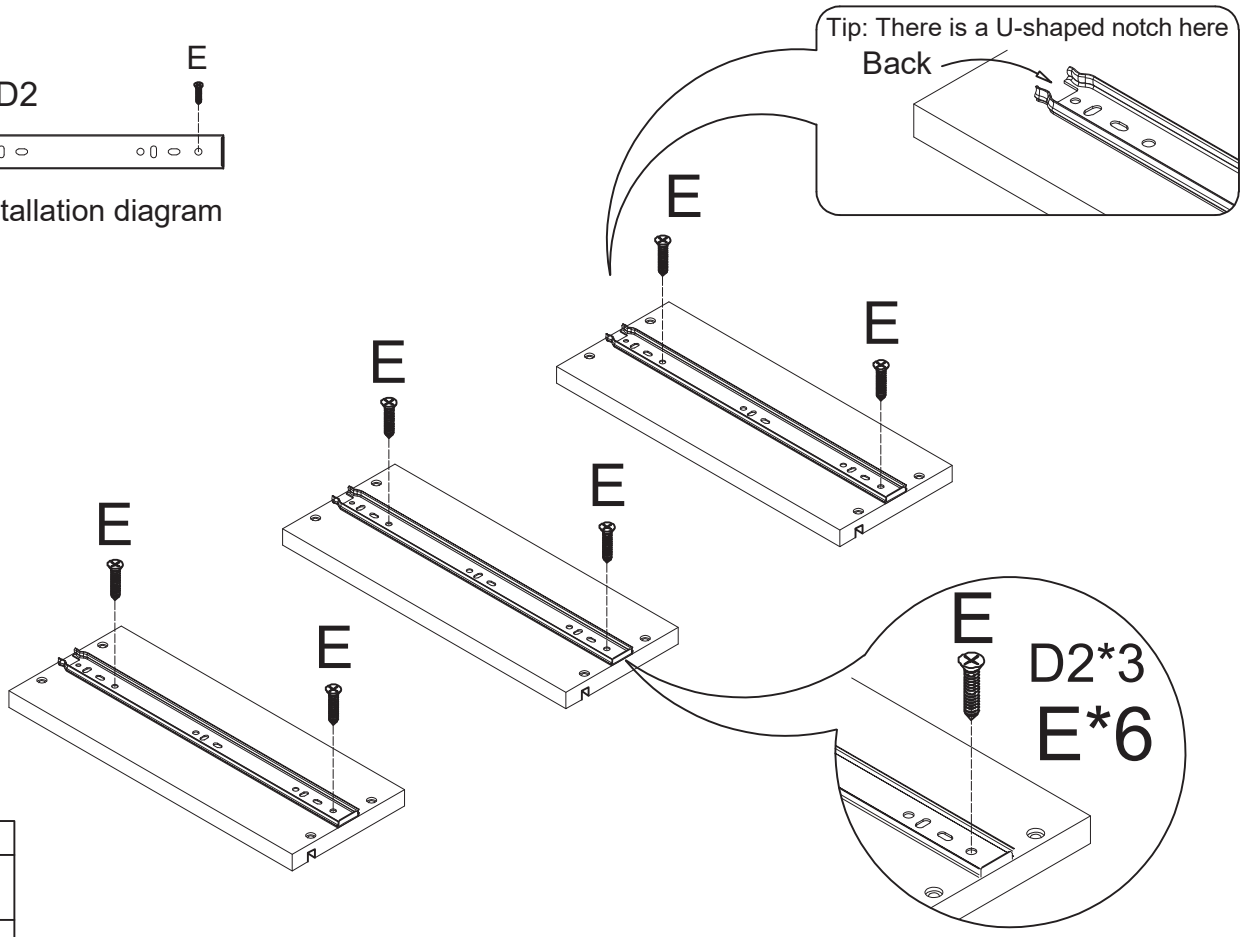

D2	3 PCS
12"	

E	6 PCS
M3.5*14	

STEP 22

Attach accessory D2 to boards 13

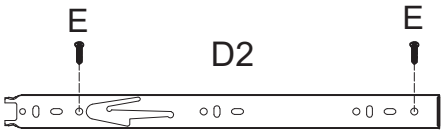

Tip: D2 hole installation diagram

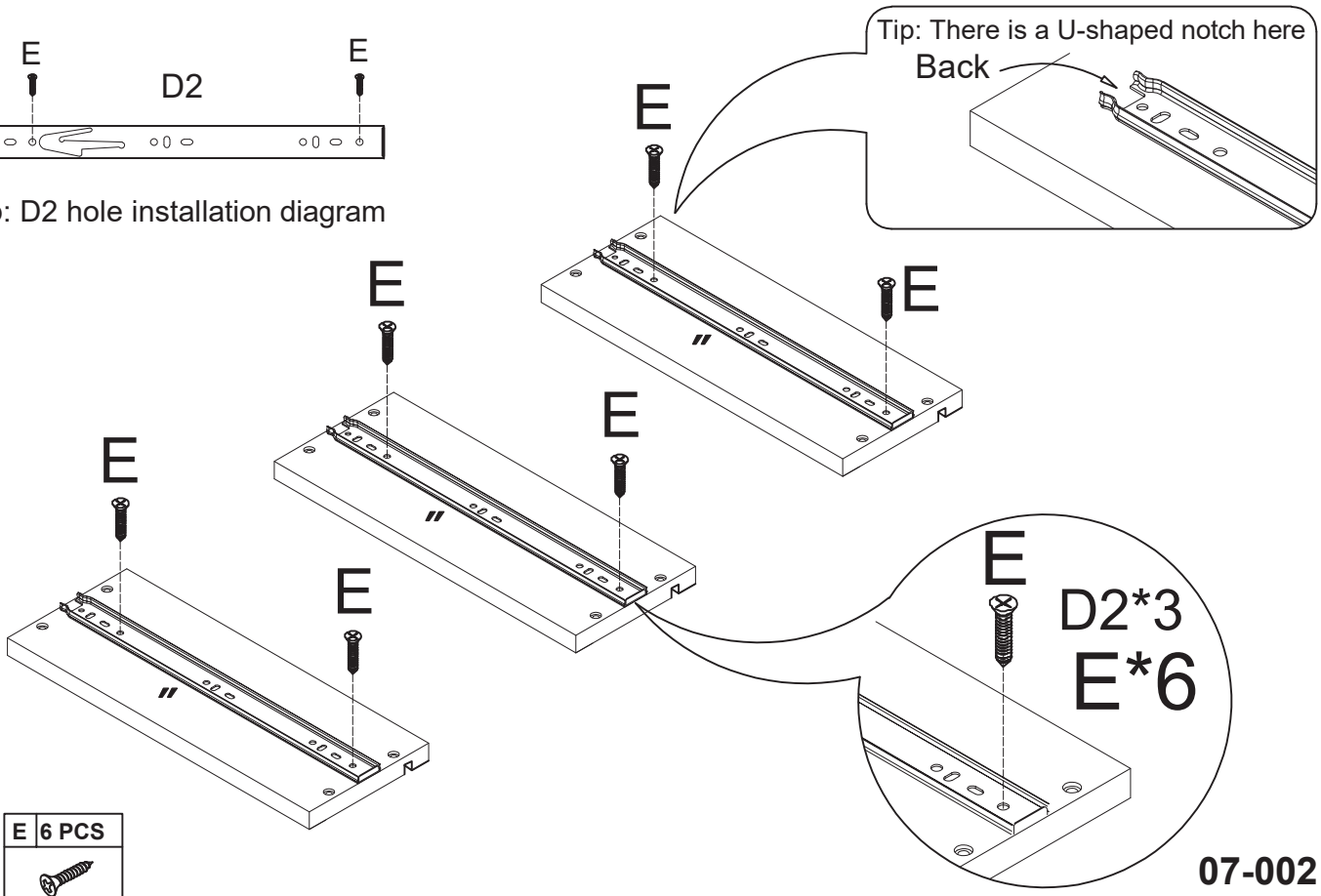

D2	3 PCS
12"	

E	6 PCS
M3.5*14	

STEP 23 Install boards 12 and 13 onto the sides of boards 14 and 15. Secure with accessories F and G

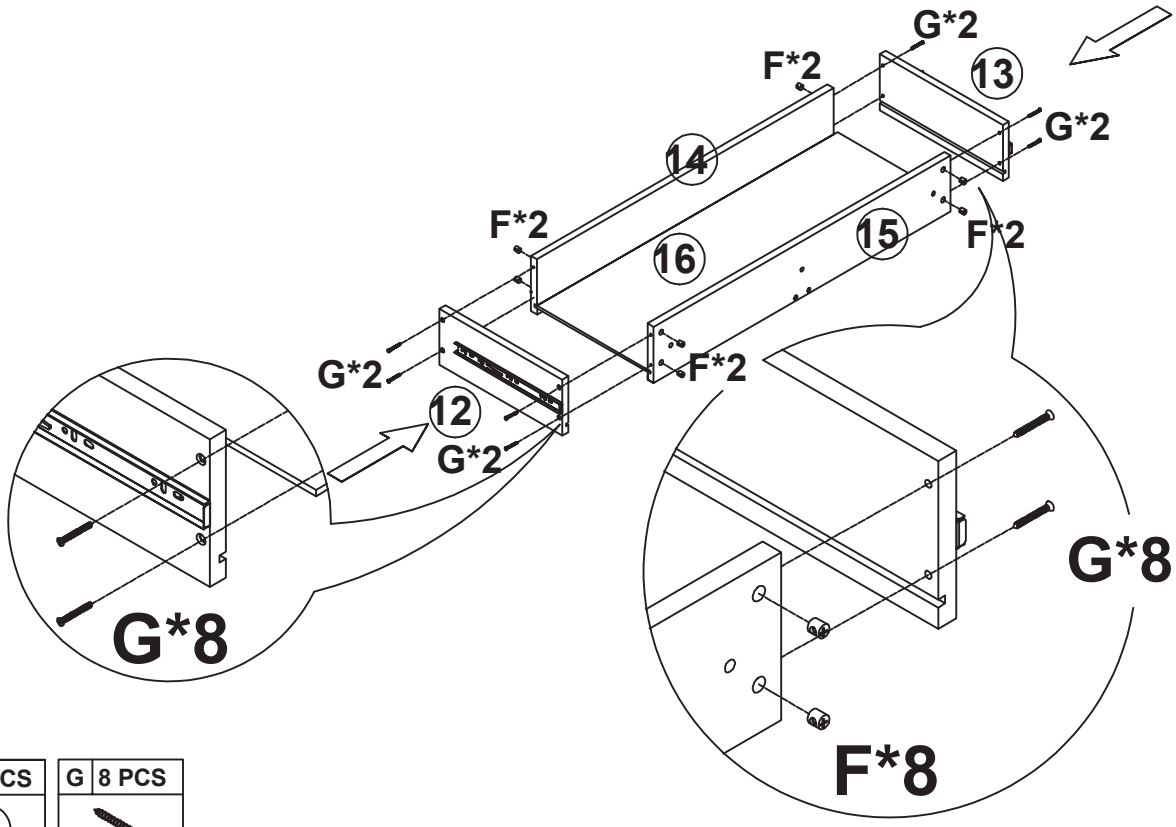

F	8 PCS
9*9MM	

G	8 PCS
M5*50	

STEP 24 Install boards 12 and 13 onto the sides of boards 14 and 15. Secure with accessories F and G

Install the remaining two drawers following the previous steps

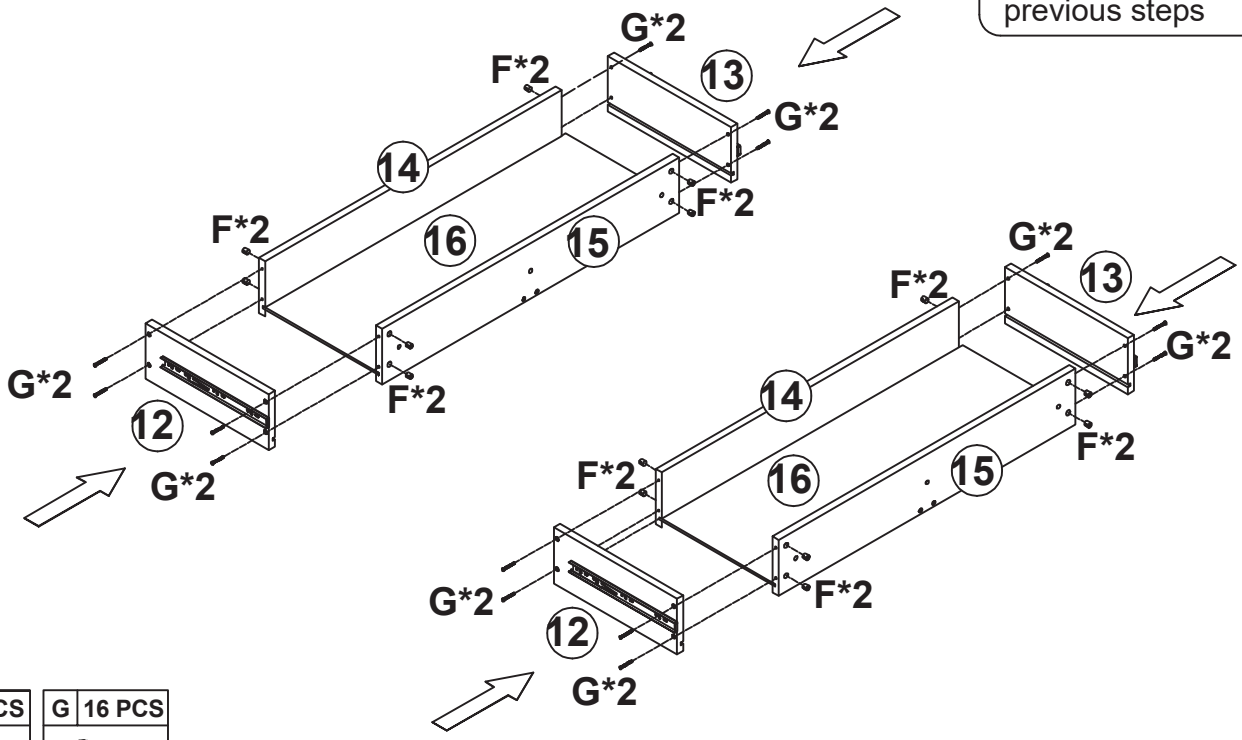

F	16 PCS
9*9MM	

G	16 PCS
M5*50	

STEP 25 Assemble drawer fronts 18, 19, and 20 with the beveled edge facing up. Secure with accessory H

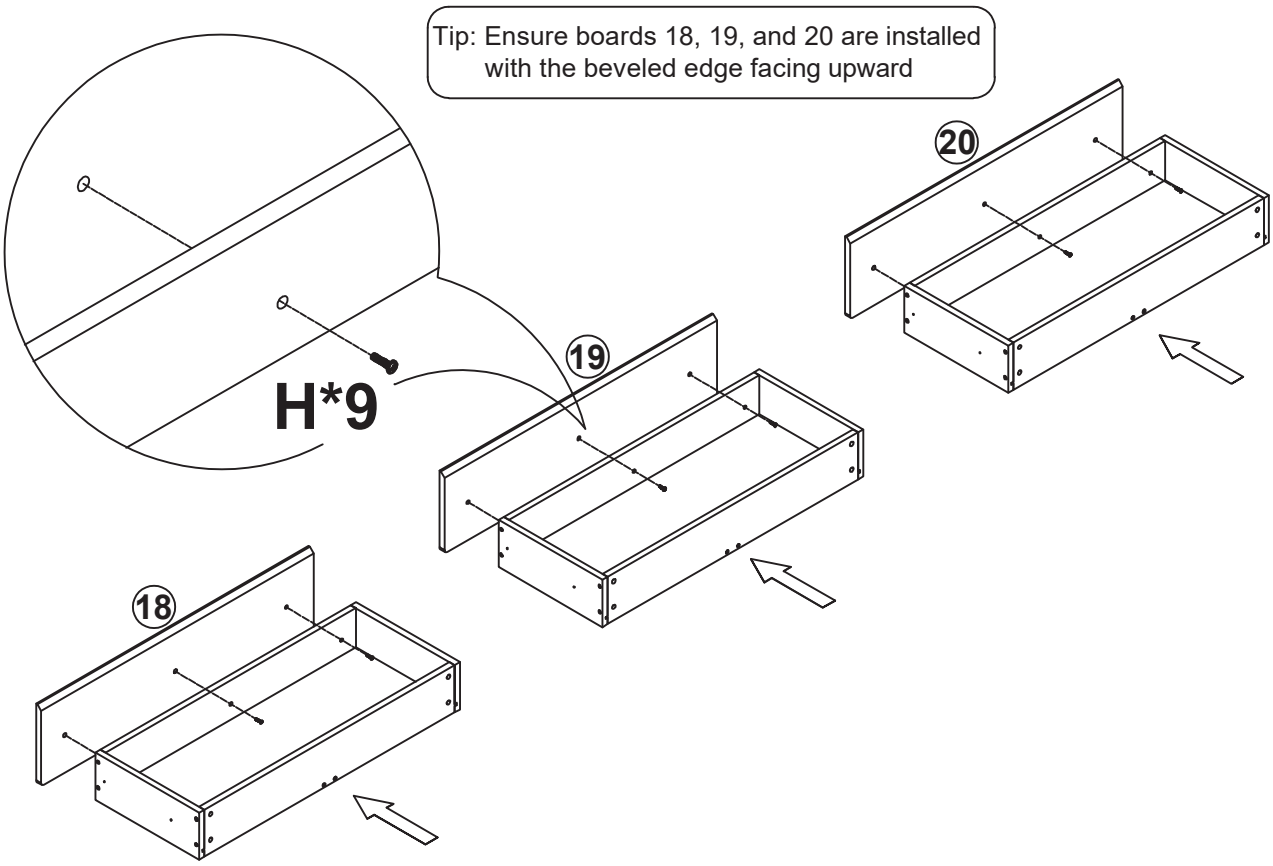

H	9 PCS
M6*25	

Installation options (wall or floor)

Option 1: Install the TV stand on the wall (the wall must be solid wall not hollow wall)	Option 2: Install base on TV stand for floor use
STEP 26 Drill holes in the wall according to the holes on board 9 and install accessories I	**STEP 26** Attach accessory B to board 21

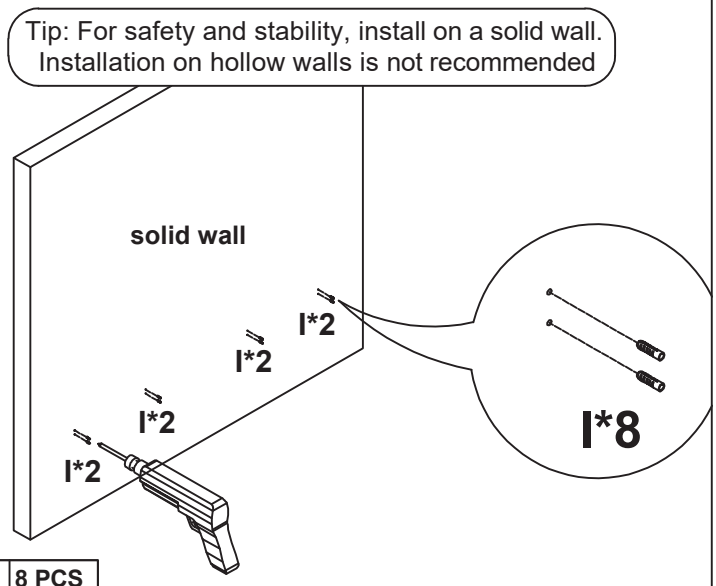

I	8 PCS
8*38mm	

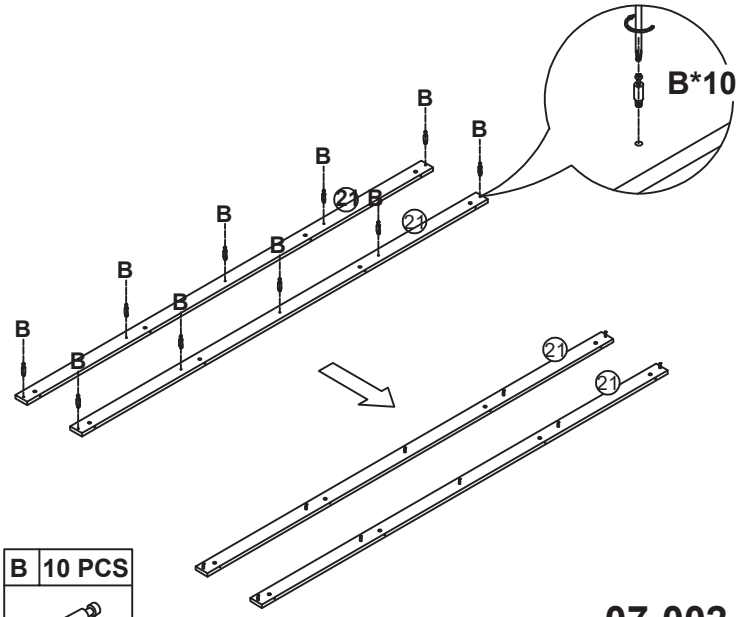

B	10 PCS
6*25mm	

STEP 27

Install board 9 onto the wall using accessory K
(Suitable for solid concrete or brick walls only.)

Tip: For safety and stability, install on a solid wall.
Installation on hollow walls is not recommended

Note: Board 9 should be installed with the beveled edge facing the wall, functioning as a hook to secure the TV stand

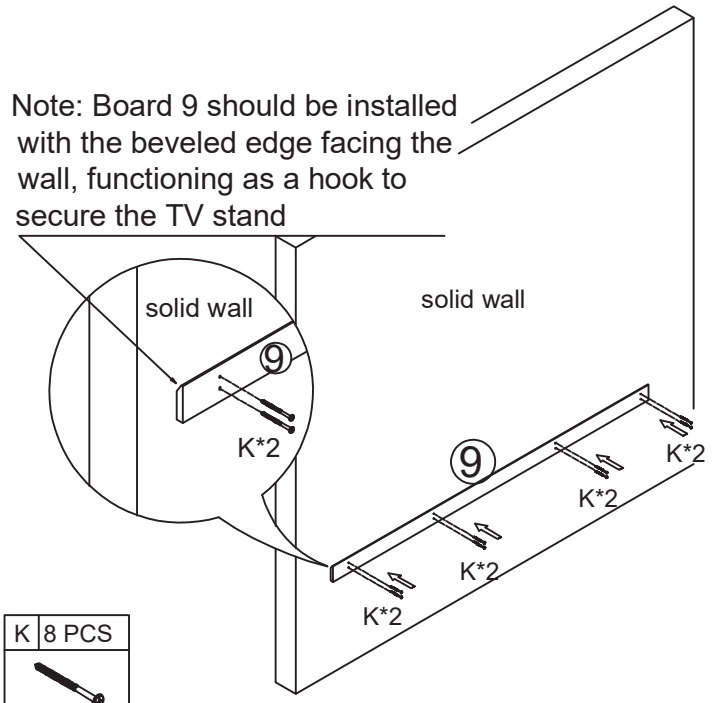

K	8 PCS
M4*50	

STEP 27

Install board 21 onto both sides of board 22
and secure with accessory A

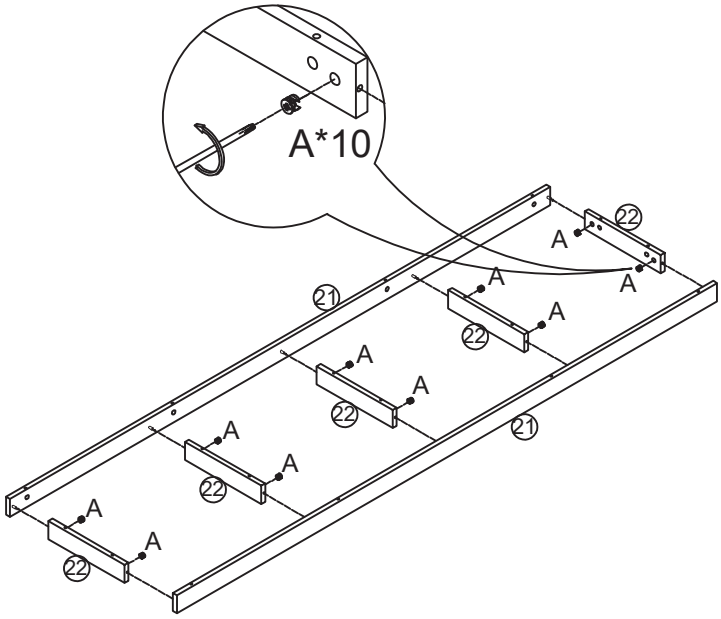

A	10 PCS
15*10mm	

STEP 28

Hang the TV cabinet onto board 9
and secure with accessory J.

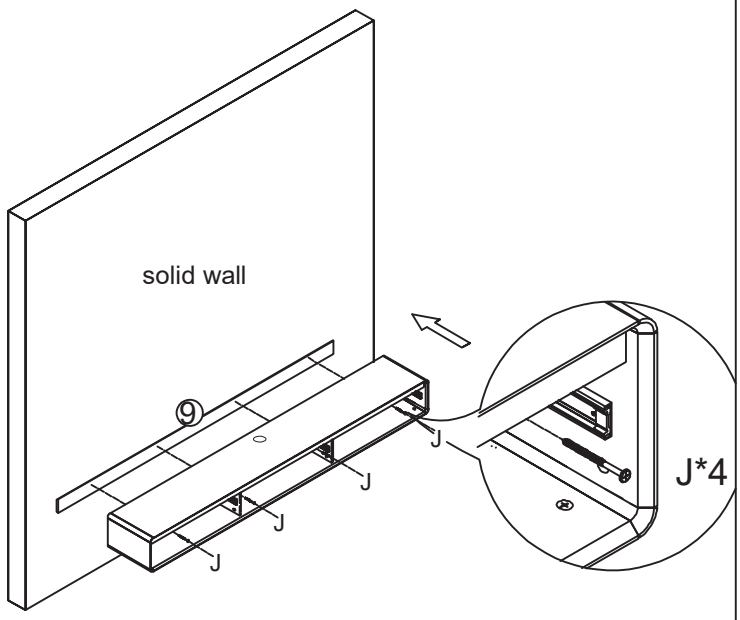

J	4 PCS
M4*30	

STEP 28

Attach accessory B to board 2

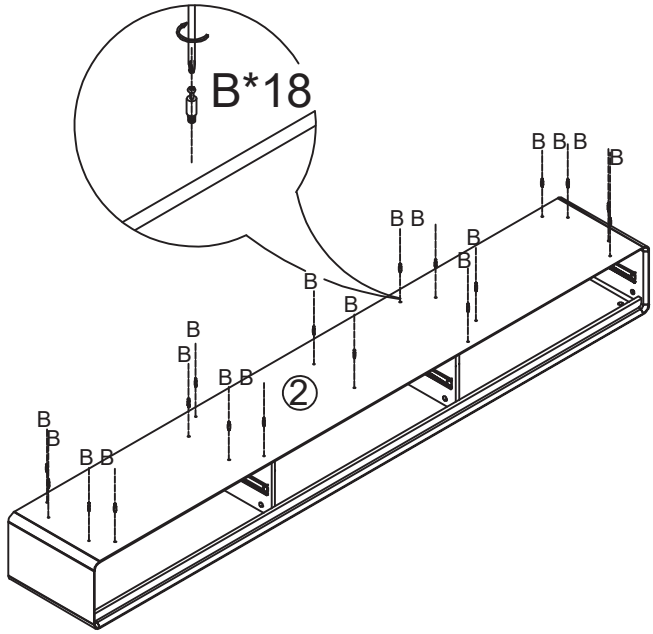

B	18 PCS
6*25mm	

STEP 29

Install the 3 drawers in sequence inside the TV cabinet by connecting the rails D1 and D2

Tip: Drawers must be installed in the numbered order shown in the diagram. Incorrect order may affect proper function

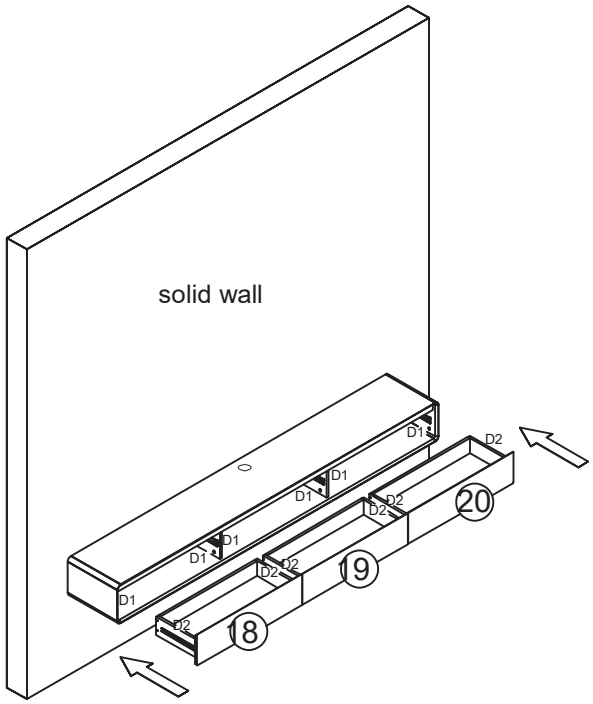

STEP 29

Install board 21 and 22 onto board 2 and secure with accessory A

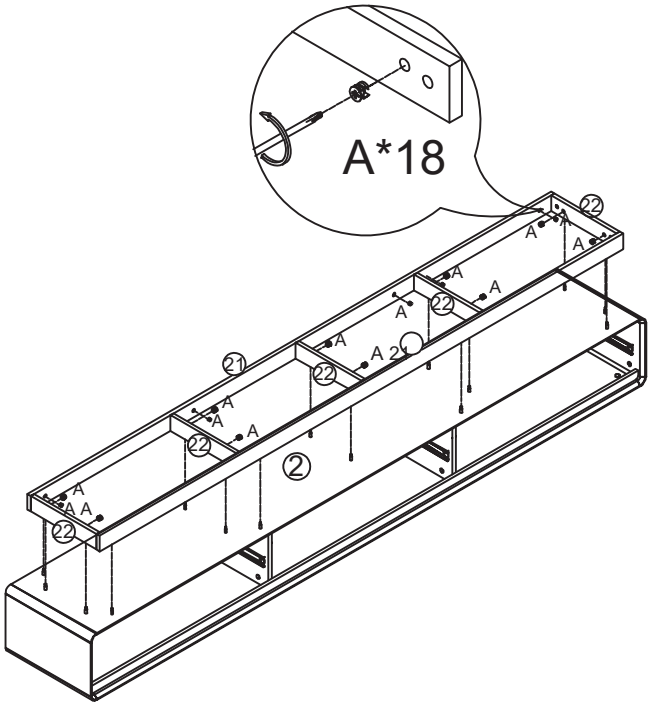

A	18 PCS
15*10mm	

STEP 30

Congratulations! The installation is complete. Thank you for your effort

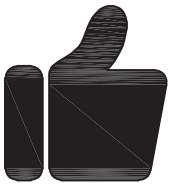

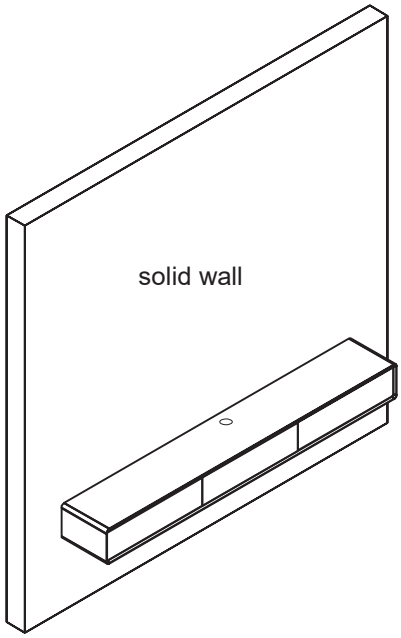

If you have any questions or concerns, please contact us!
Kevencindyyy@outlook.com

STEP 30

Install the 3 drawers in sequence inside the TV cabinet by connecting the rails D1 and D2
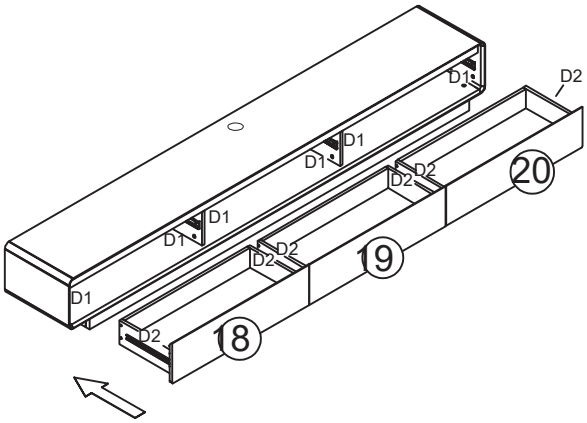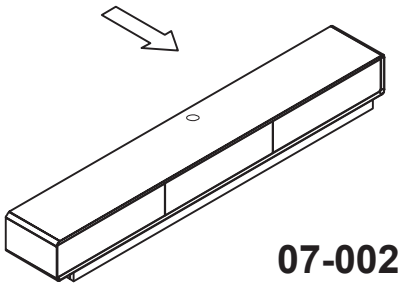
Tip: Drawers must be installed in the numbered order shown in the diagram. Incorrect order may affect proper function