ASSEMBLY INSTRUCTIONS SS16115

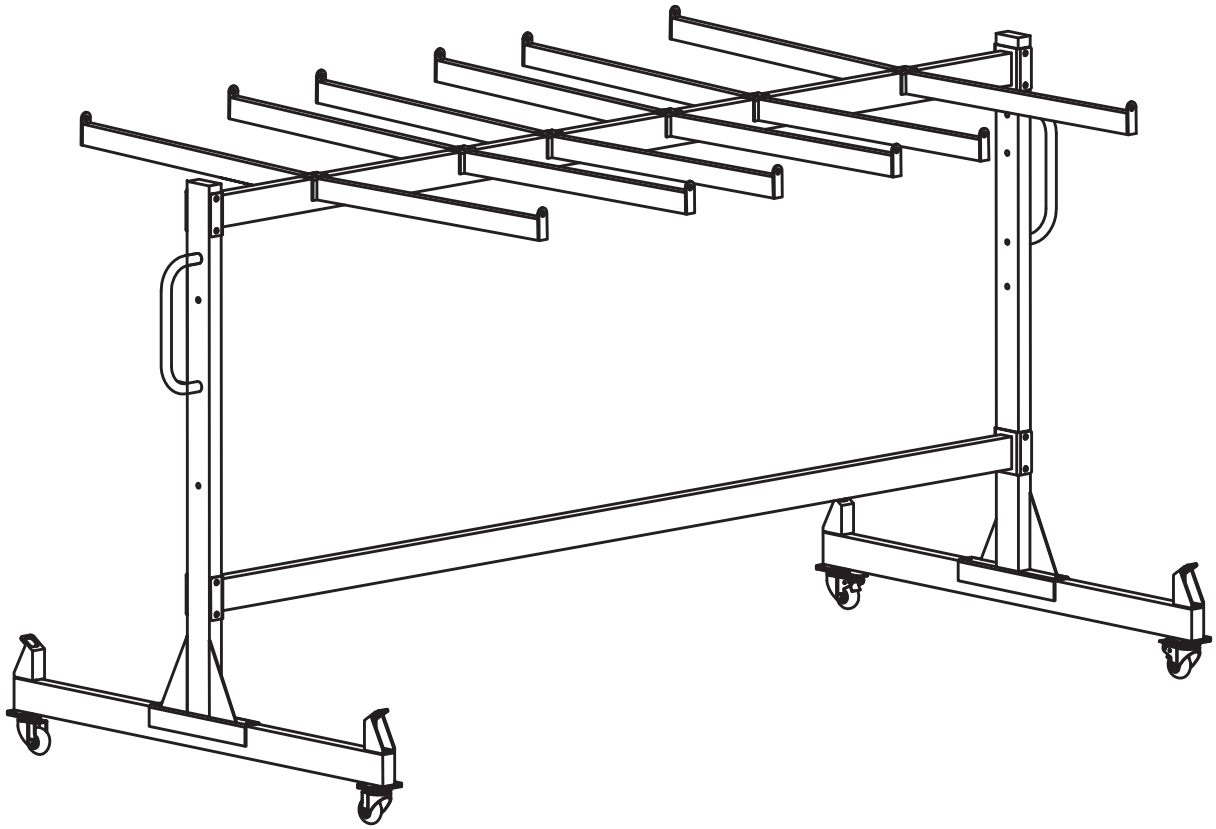

ATTENTION

1. All parts are packed in a single box. Please refer to the parts list to verify that all components are included.
2. Use caution when unpacking with a knife to avoid accidentally scratching the product's surface.
3. We greatly value your experience. If you encounter any issues—whether related to delivery, assembly, usage, or post-purchase care—please contact us promptly. Our products come with a one-year warranty and customer service.
4. Please keep children away during installation. This product contains small parts that may pose a choking hazard if swallowed.

PARTS LIST

A 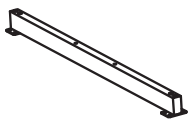 2 PCS	B 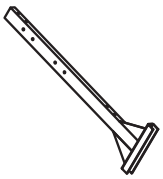 2 PCS	C 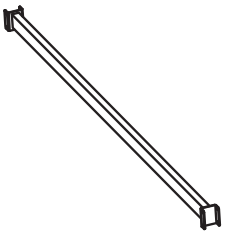 1 PC	D 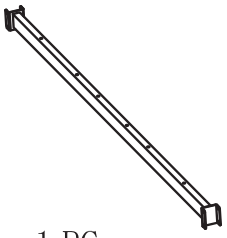 1 PC	E 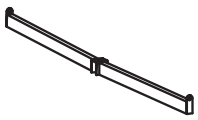 6 PCS
F  2 PCS	G  2 PCS	H  4 PCS	I  2 PCS	J 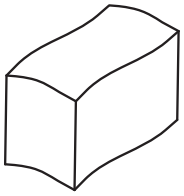 1 PC
K  2 PCS				

Screw Package List

L  M8*12 24PCS	M  M8*40 4PCS	N 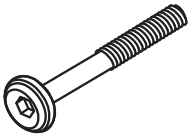 M8*65 18PCS	O  M8 4PCS
P  M8 34PCS	AA-M8 	BB-M8 	

Assembly Guide

STEP 1

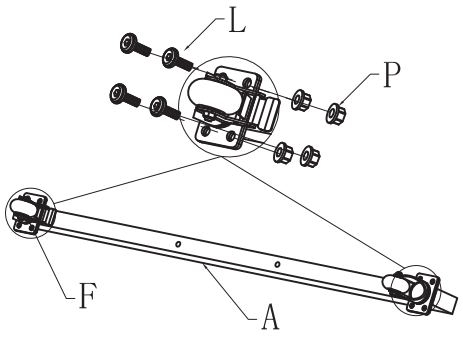

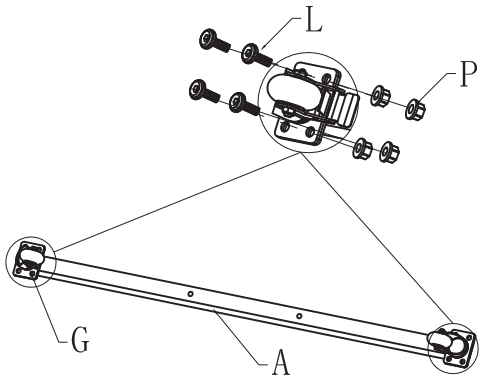

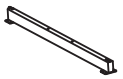
A*2


F*2


G*2


L*16


P*16

STEP 2

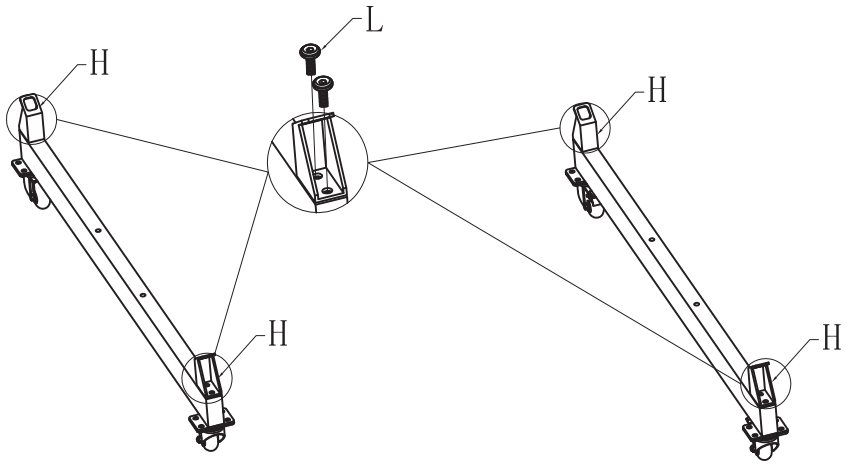


H*4


L*8

STEP 3

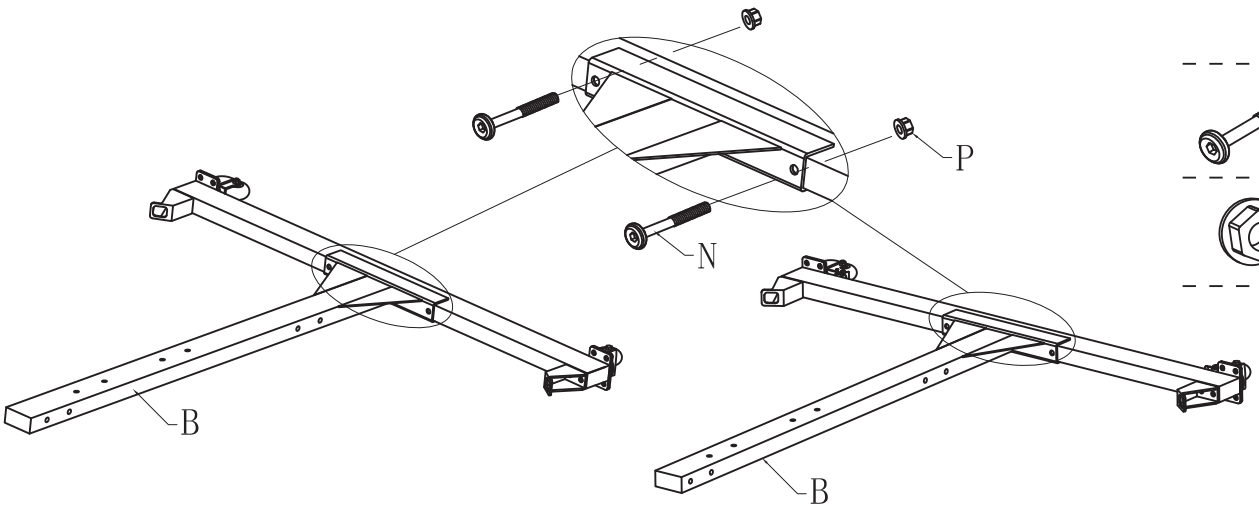


B*2

N*4

P*4

Assembly Guide

STEP 4

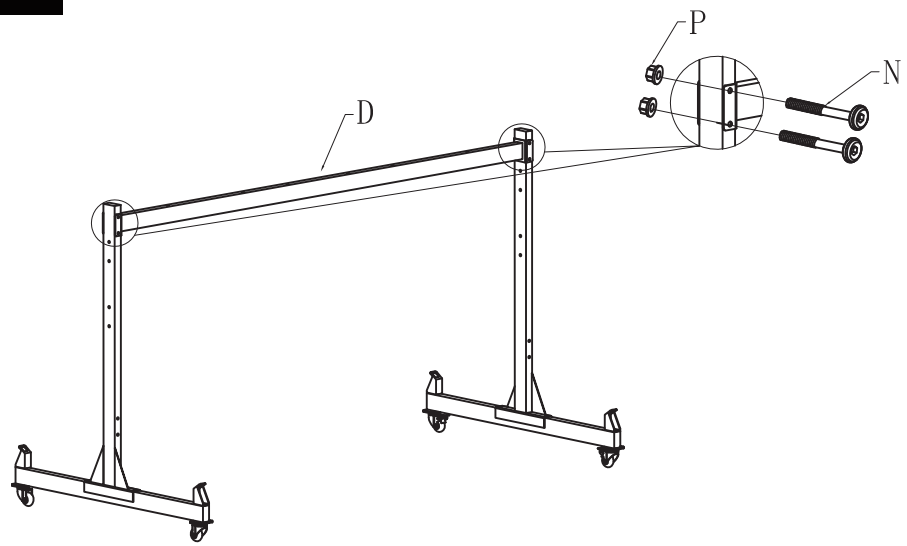


D*1


N*4


P*4

STEP 5

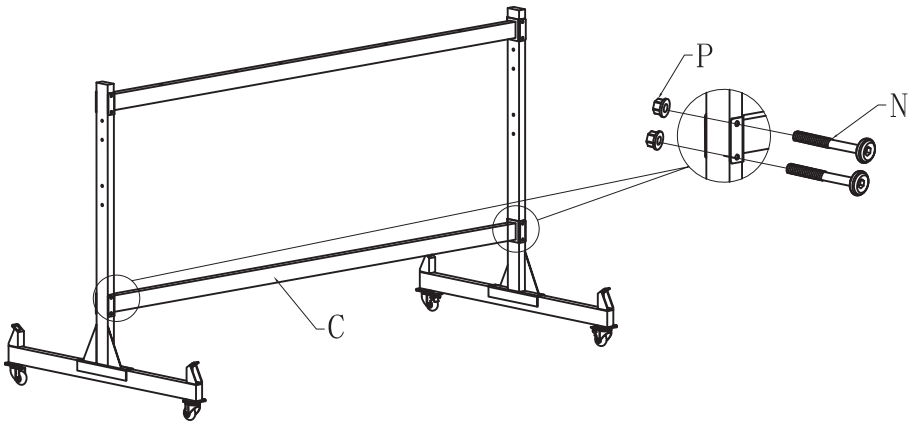


D*1


N*4


P*4

STEP 6

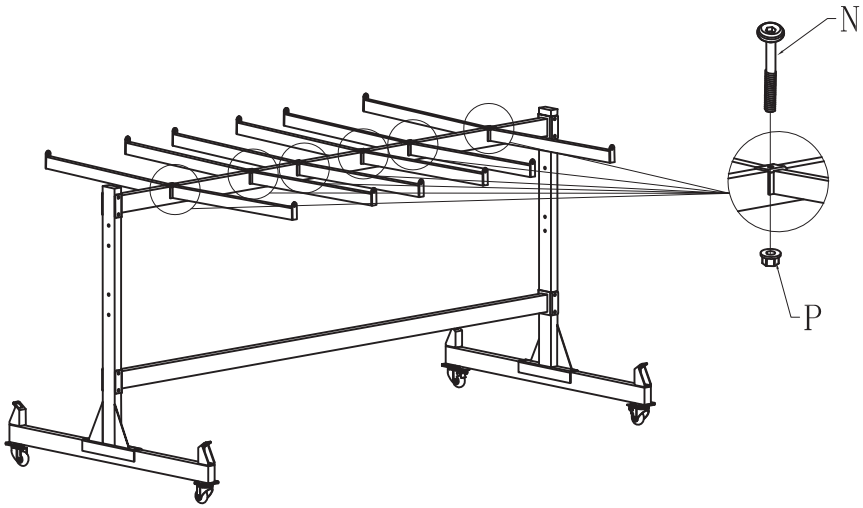

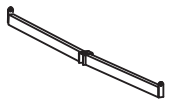
E*6


N*6


P*6

STEP 7

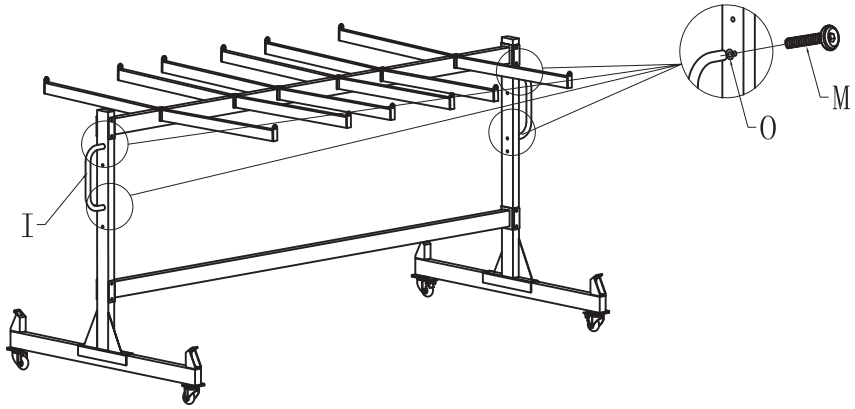



I*2



O*4



M*4

STEP 8

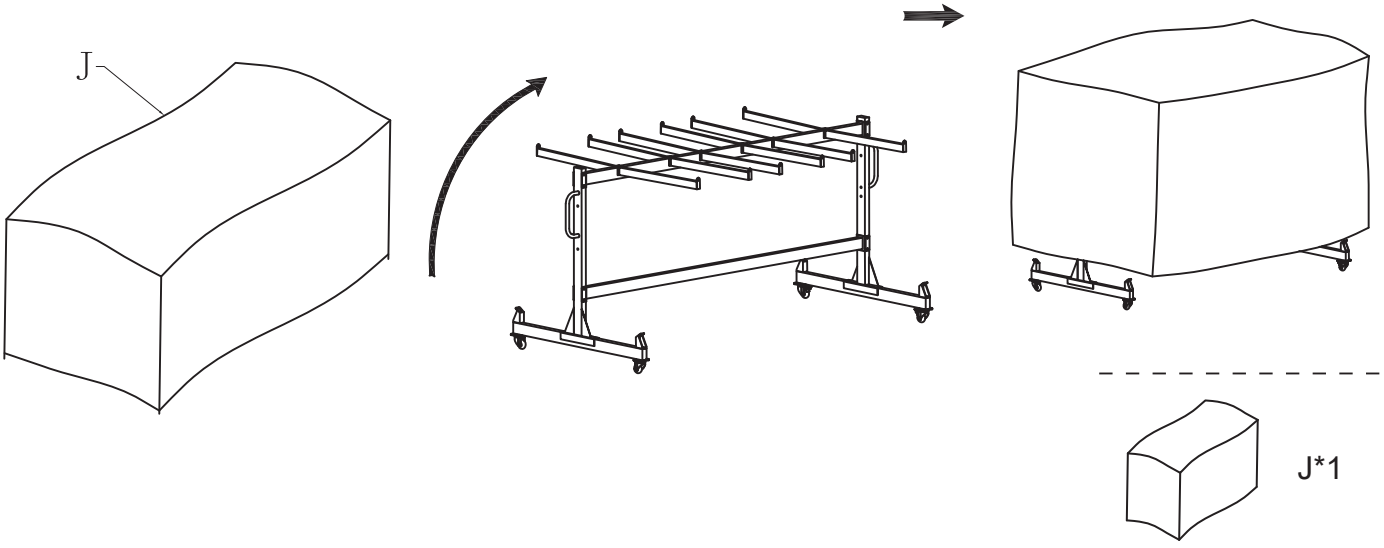

J*1

Assembly Guide

