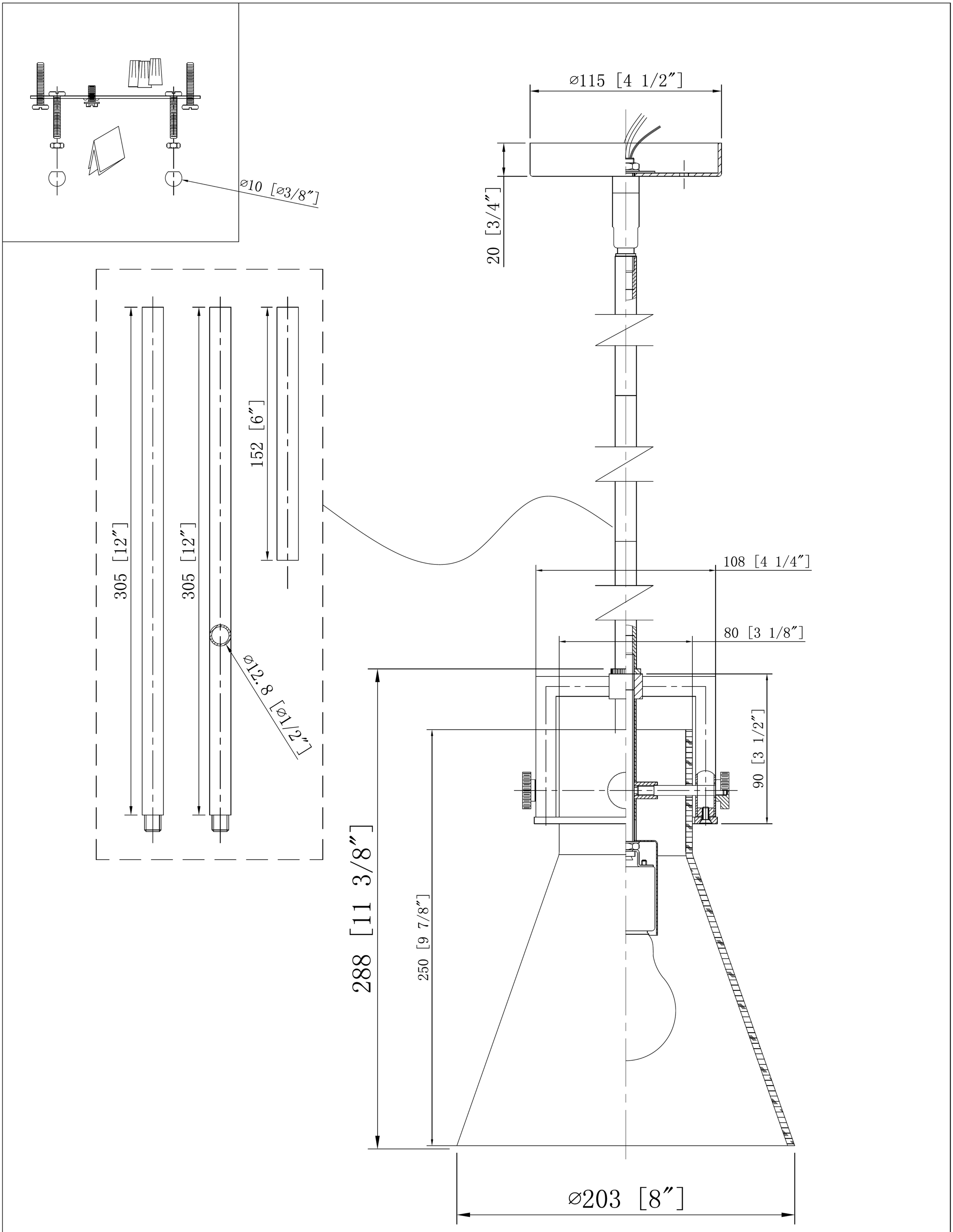
⌀10 [⌀3/8″]
⌀115 [4 1/2″]
20 [3/4″]
305 [12″]
305 [12″]
152 [6″]
⌀12.8 [⌀1/2″]
108 [4 1/4″]
80 [3 1/8″]
90 [3 1/2″]
288 [11 3/8″]
250 [9 7/8″]
⌀203 [8″]

ITEM: