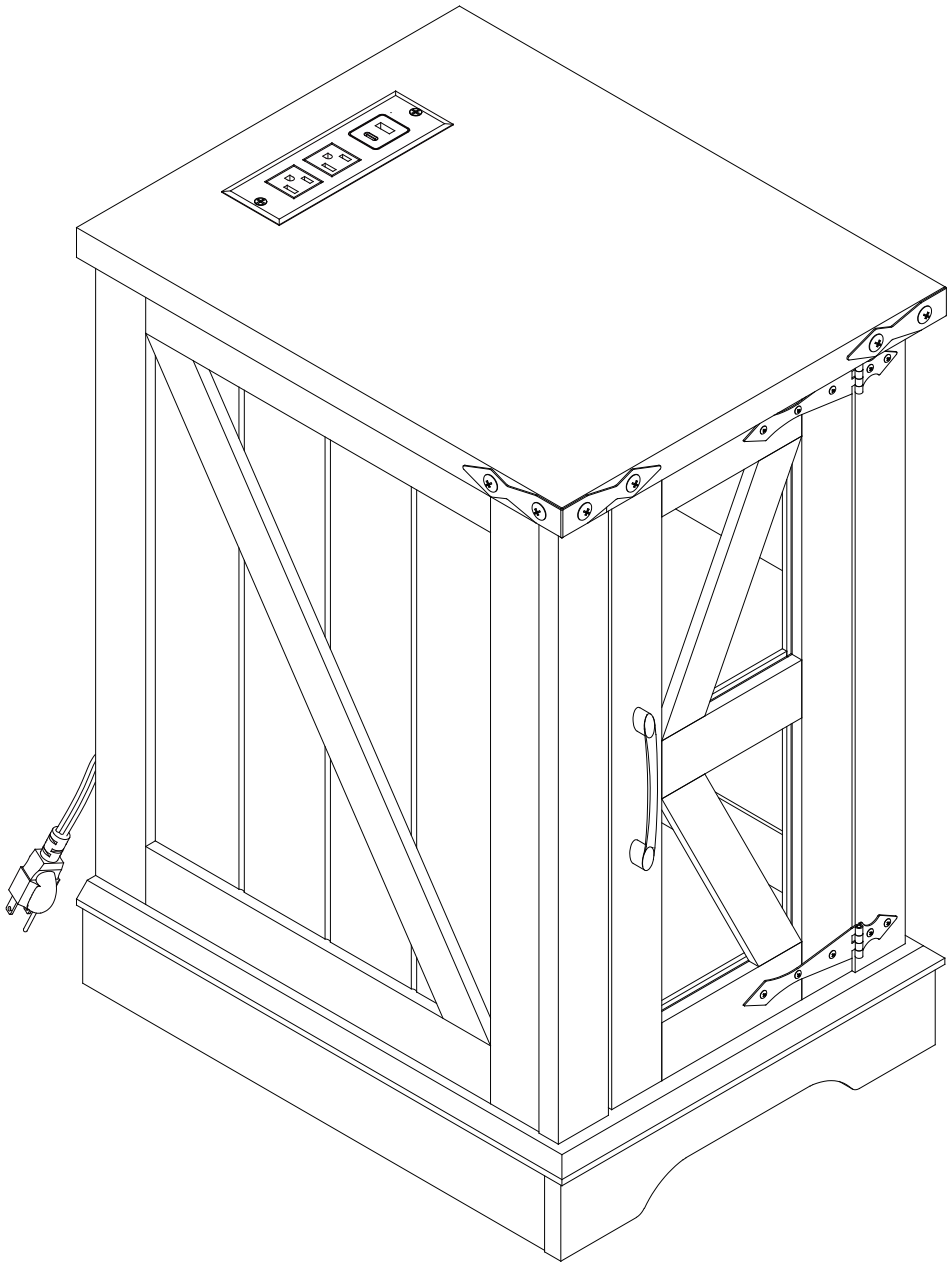

ATTENTION

If there is any missing, please kindly send us messages to let us know the part number of missing part regarding to the first page of instructions.

Please also provide your full address, recipient name and contact phone number so that we can send replacement to you as soon as possible.

Children have died from furniture tipover. To reduce the risk of furniture tipover. ALWAYS install tipover restraint provided.

PART LIST

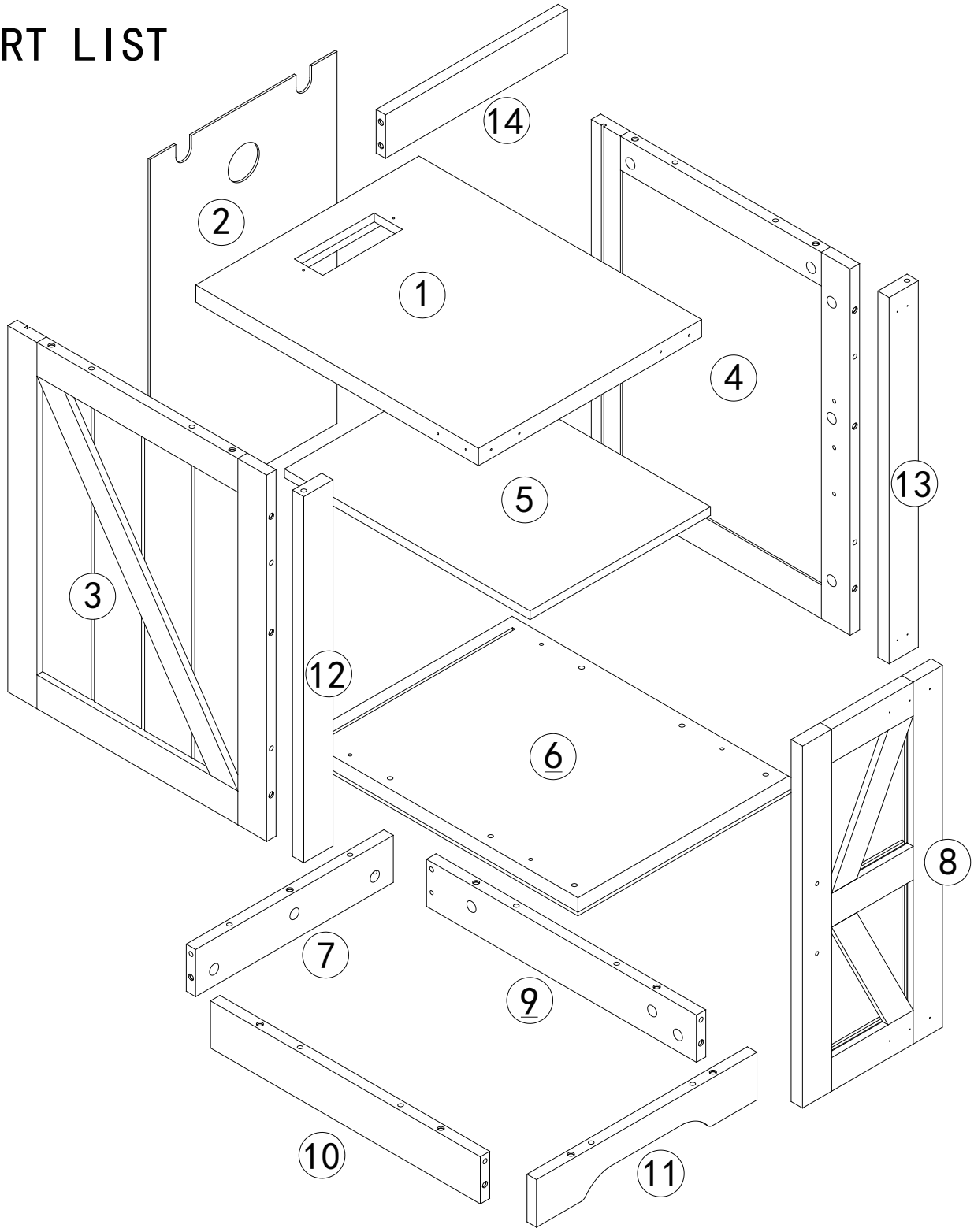

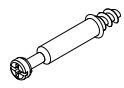
∅6x35MM
Ax25+2


∅15x10MM
Bx25+2


∅6x30MM
Cx28+2

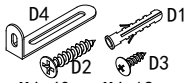

M4x40mm M4x12mm
Dx2


M3x14mm
Ex3

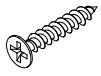
M4x35mm
Fx4


M4x22mm
Gx2

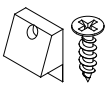
M3x16mm
Ix4


M4x12mm
Jx18+1


M34x12x1mm
Kx1

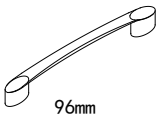
96mm
Lx1

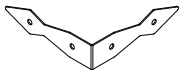
M90x90x22mm
Mx2

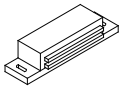
M46x17x13mm
Nx1

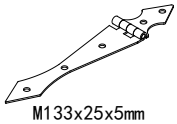
M133x25x5mm
Ox2


M17x14x12mm
Px4


M3x12mm
Qx24

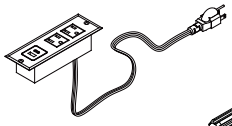
M161x54x40mm
Rx1

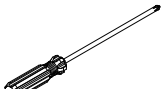
∅21x100MM
x1

PART LIST

1 x1 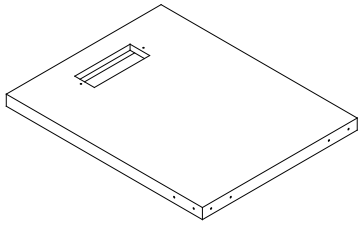	2 x1 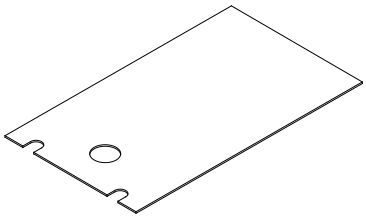	3 x1 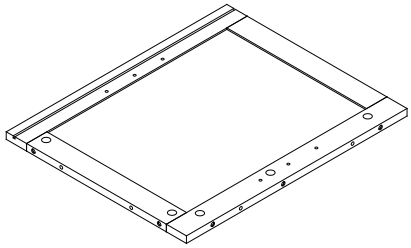
4 x1 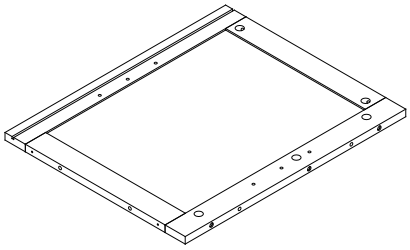	5 x1 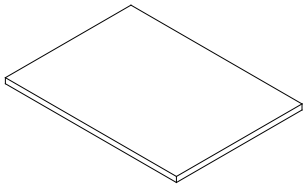	6 x1 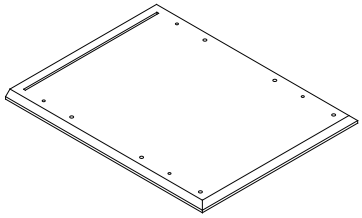
7 x1 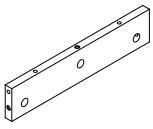	8 x1 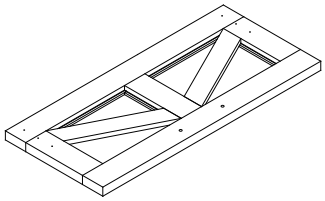	9 x1 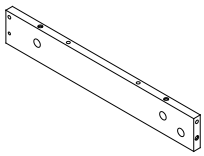
10 x1 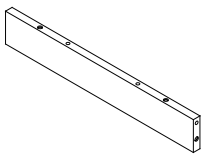	11 x1 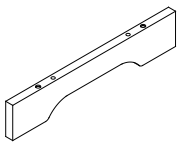	12 x1 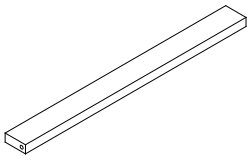
13 x1 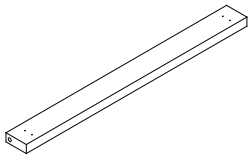	14 x1 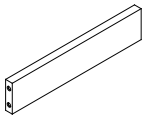	

D =

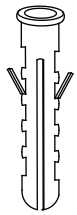

1

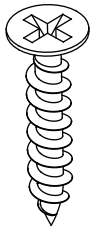

2



3

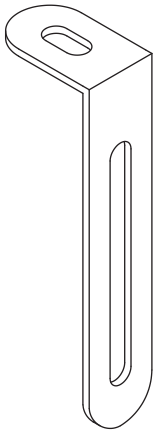

4

STEP1

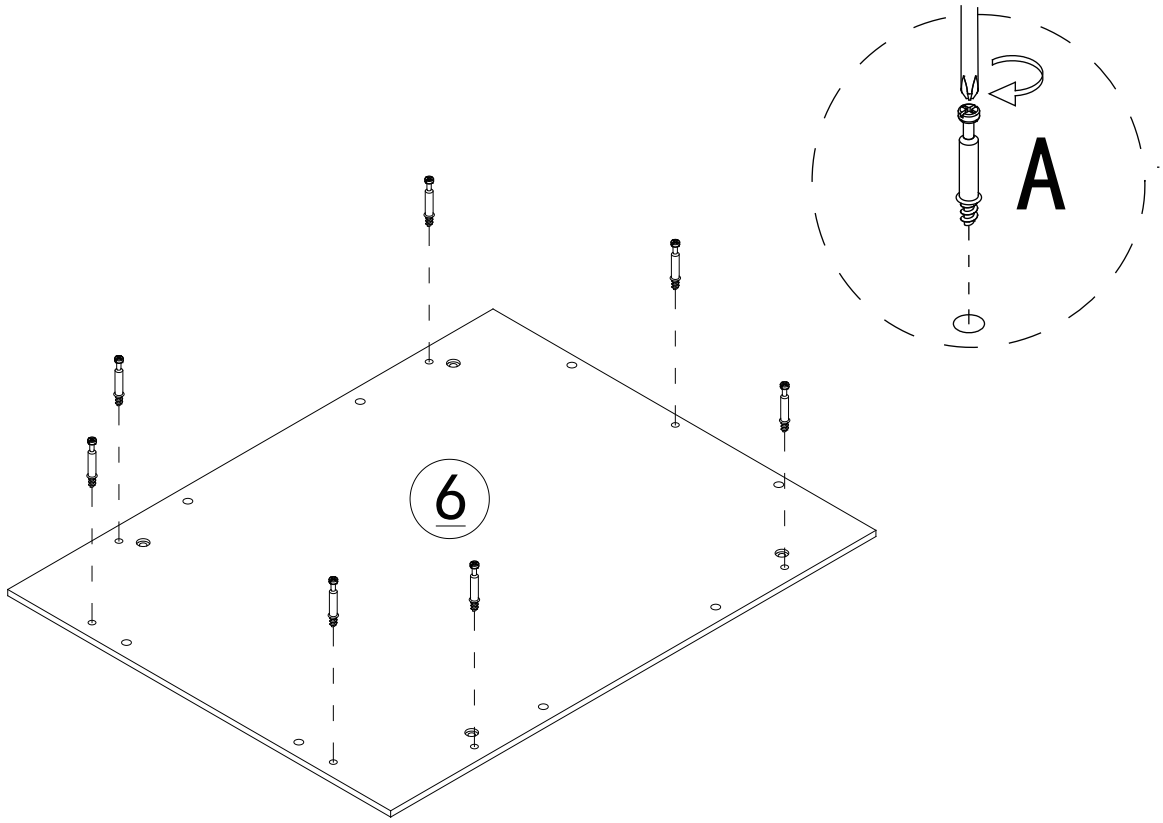

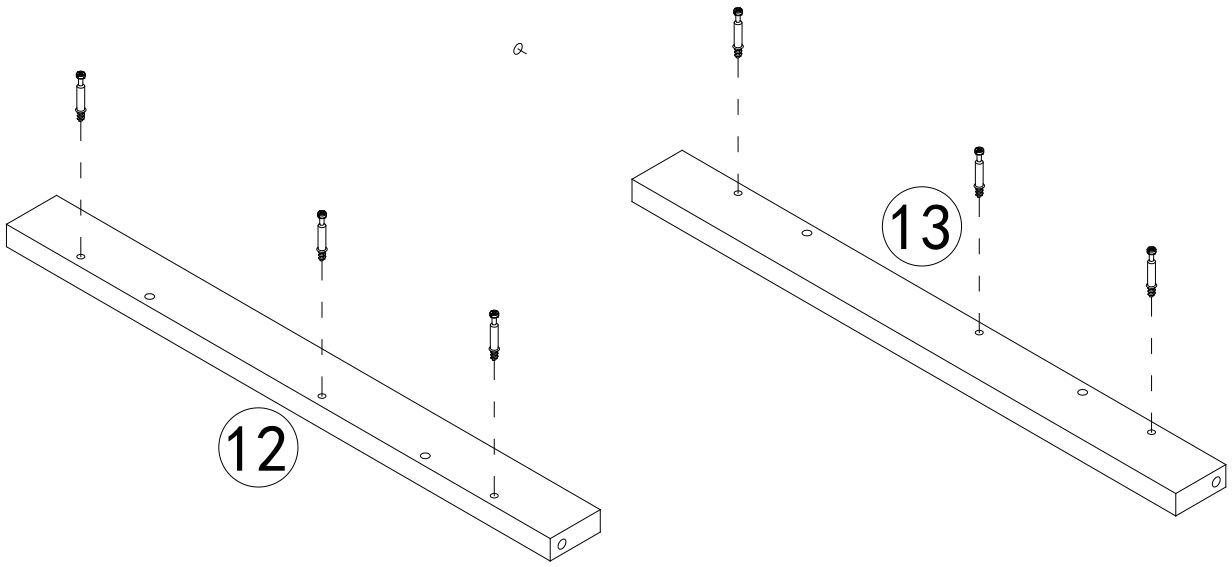

A		13pcs

STEP2

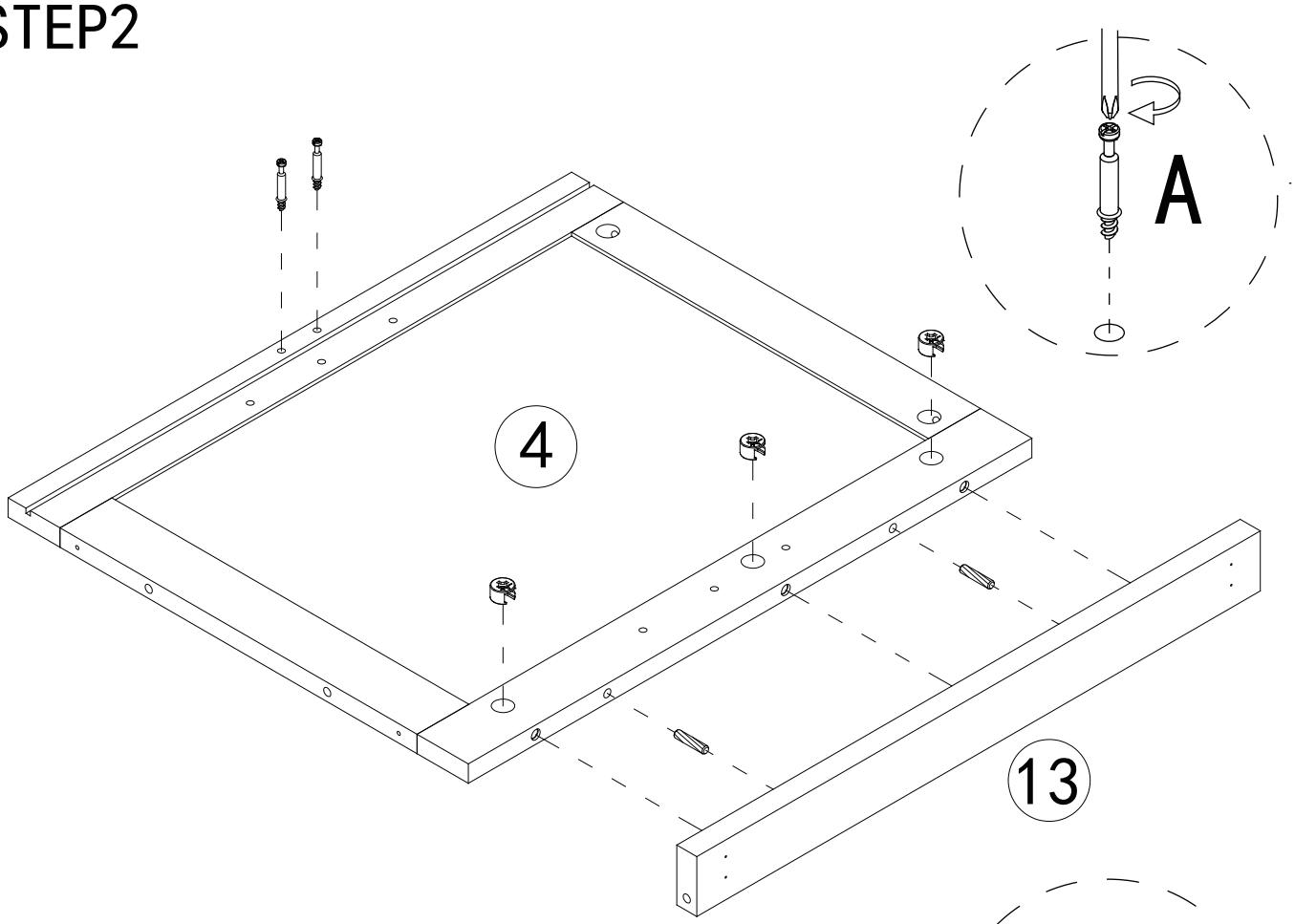

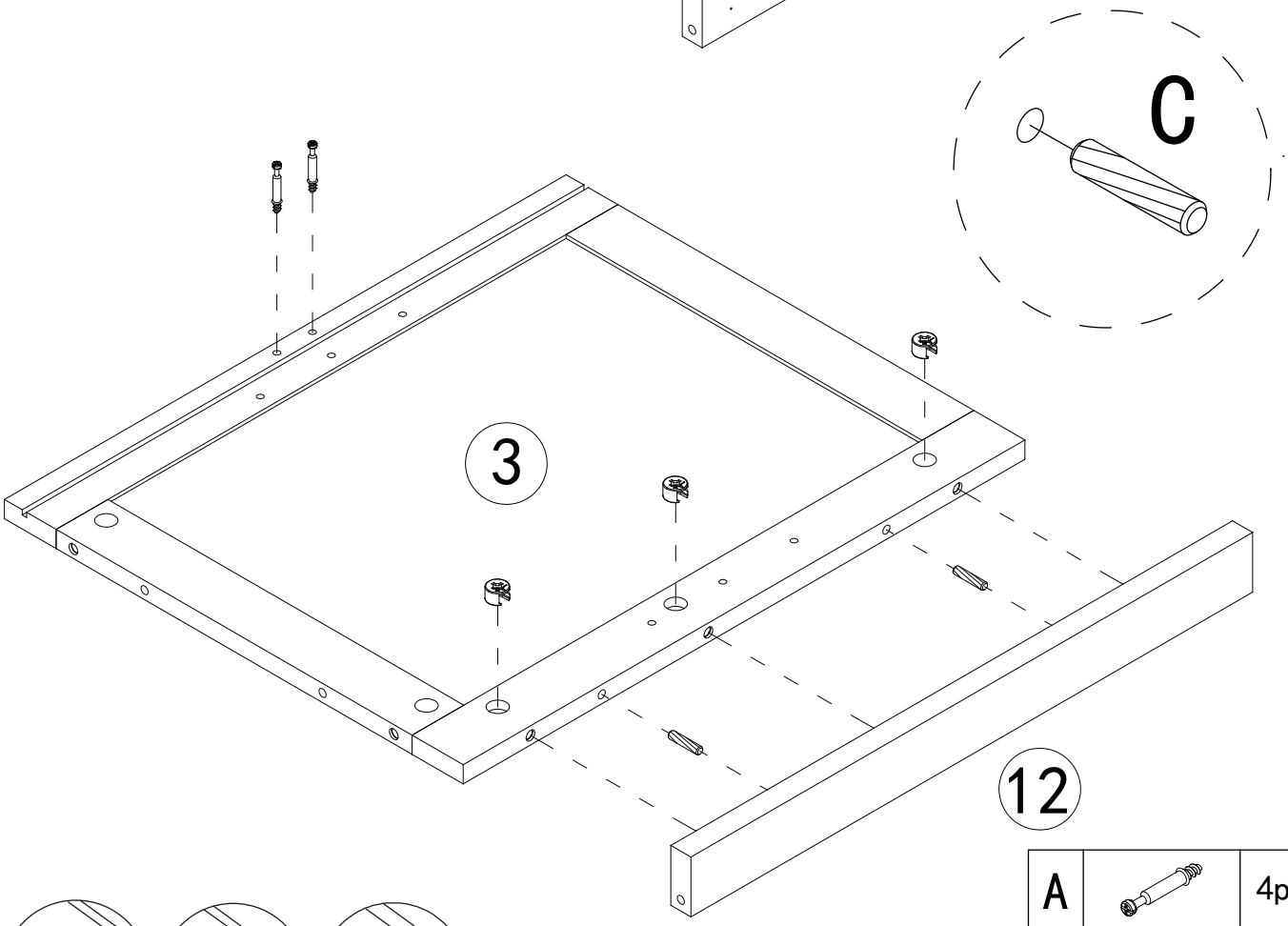

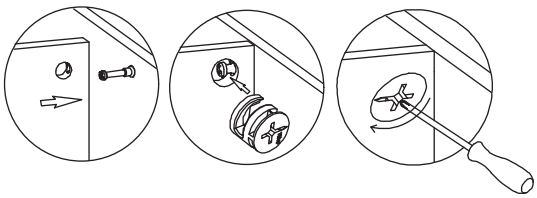

A		4pcs
B		6pcs
C		4pcs

STEP3

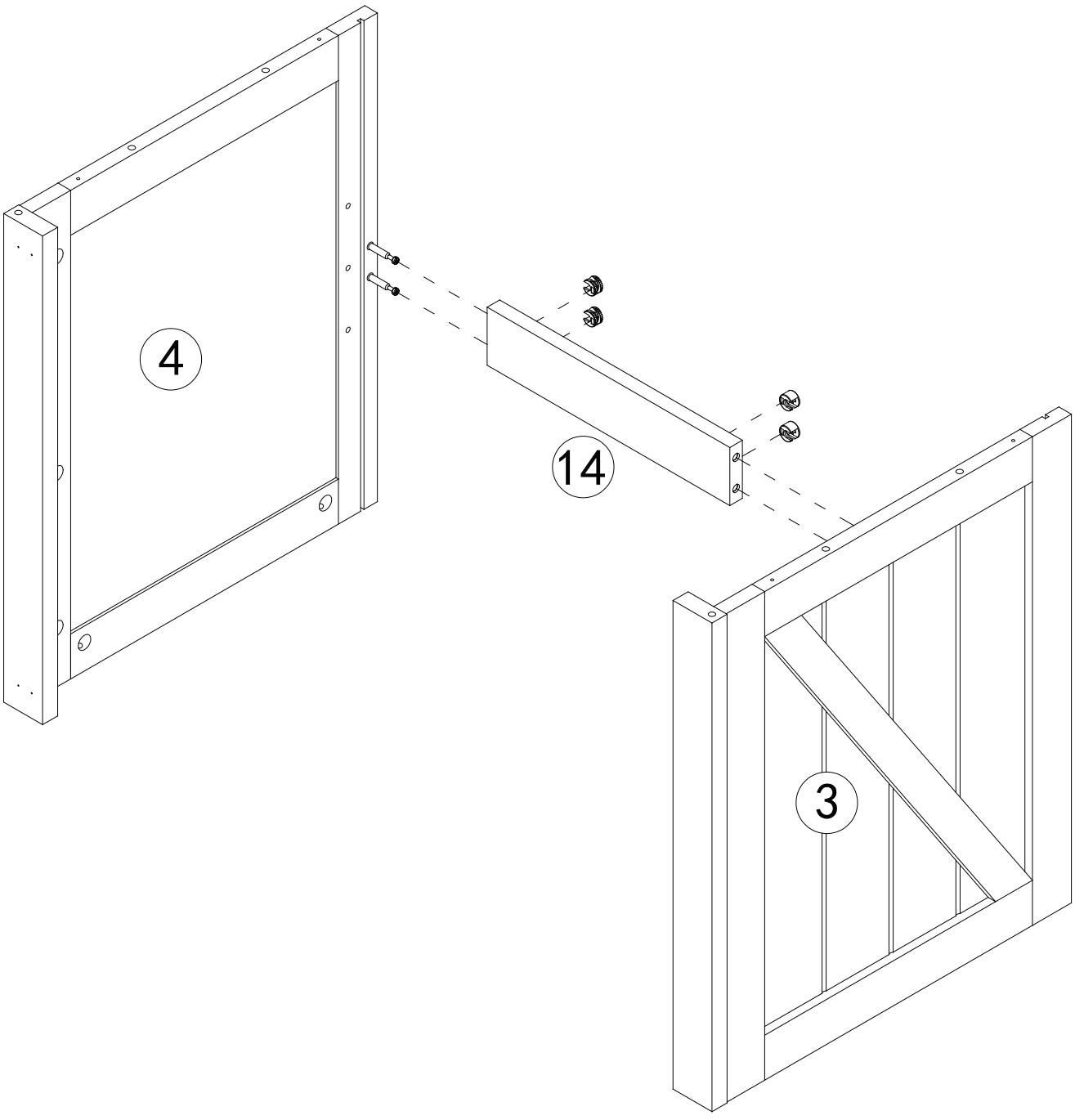

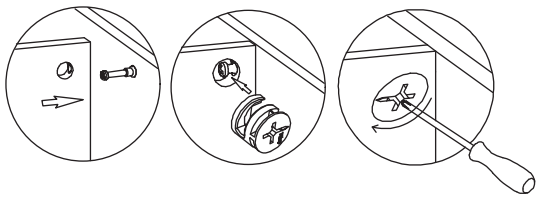

B		4pcs

STEP4

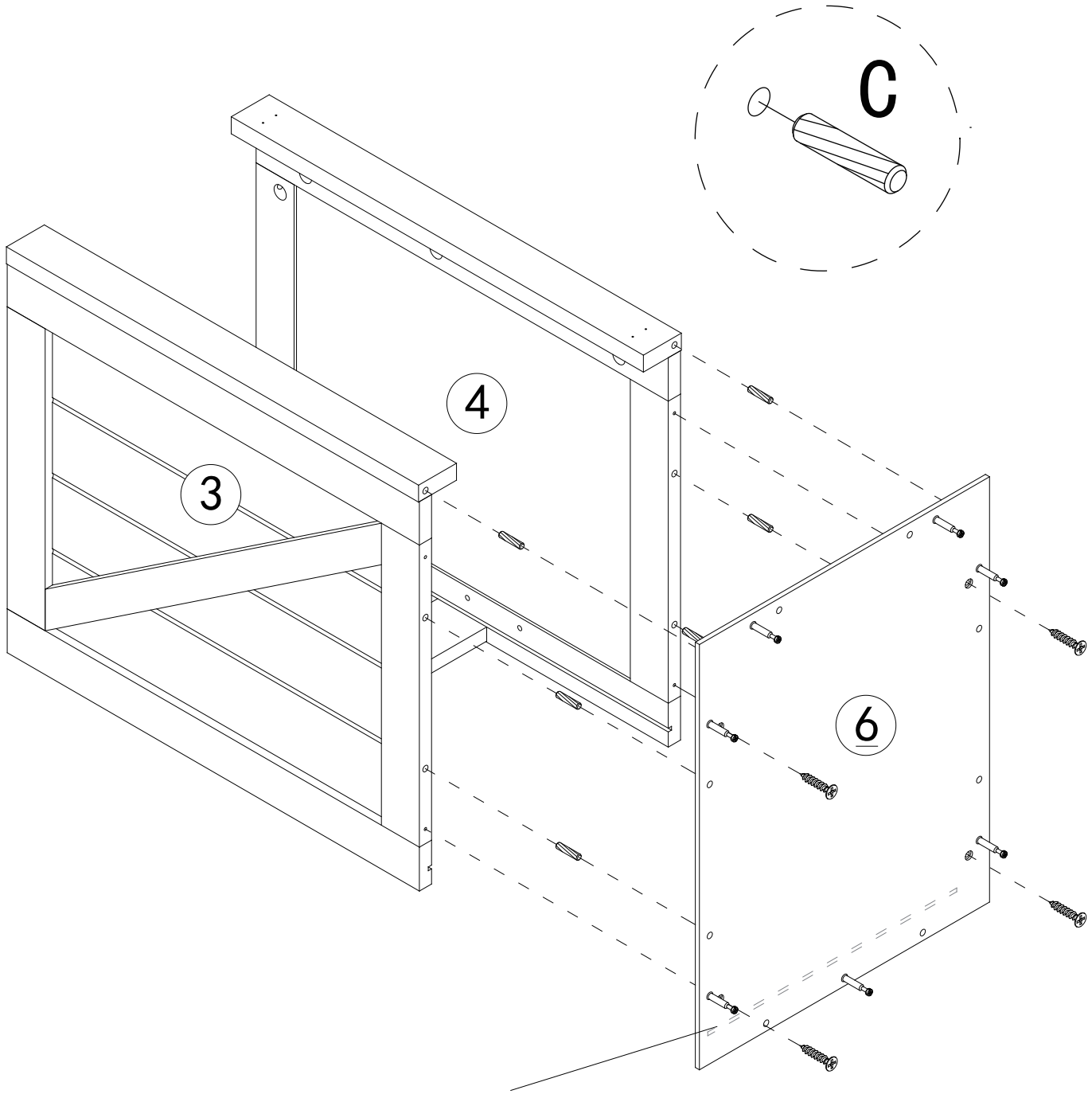

Pay attention to the position of the slot.

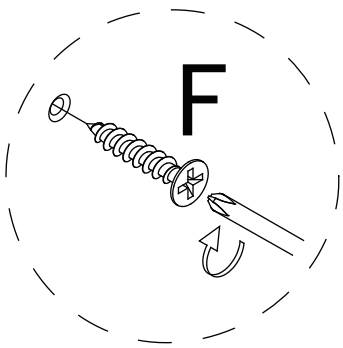

C		6pcs
F	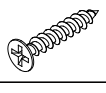	4pcs

STEP5

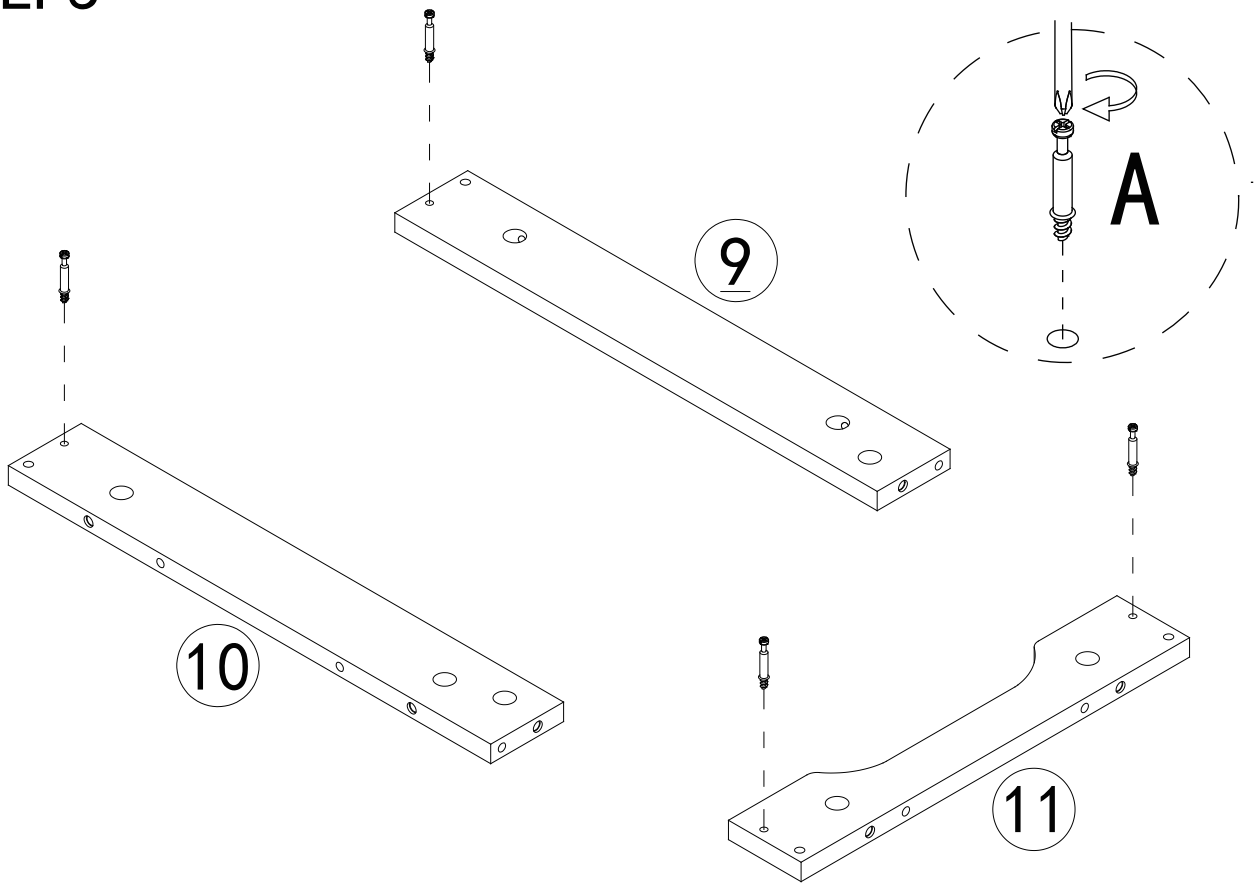

A		4pcs

STEP6

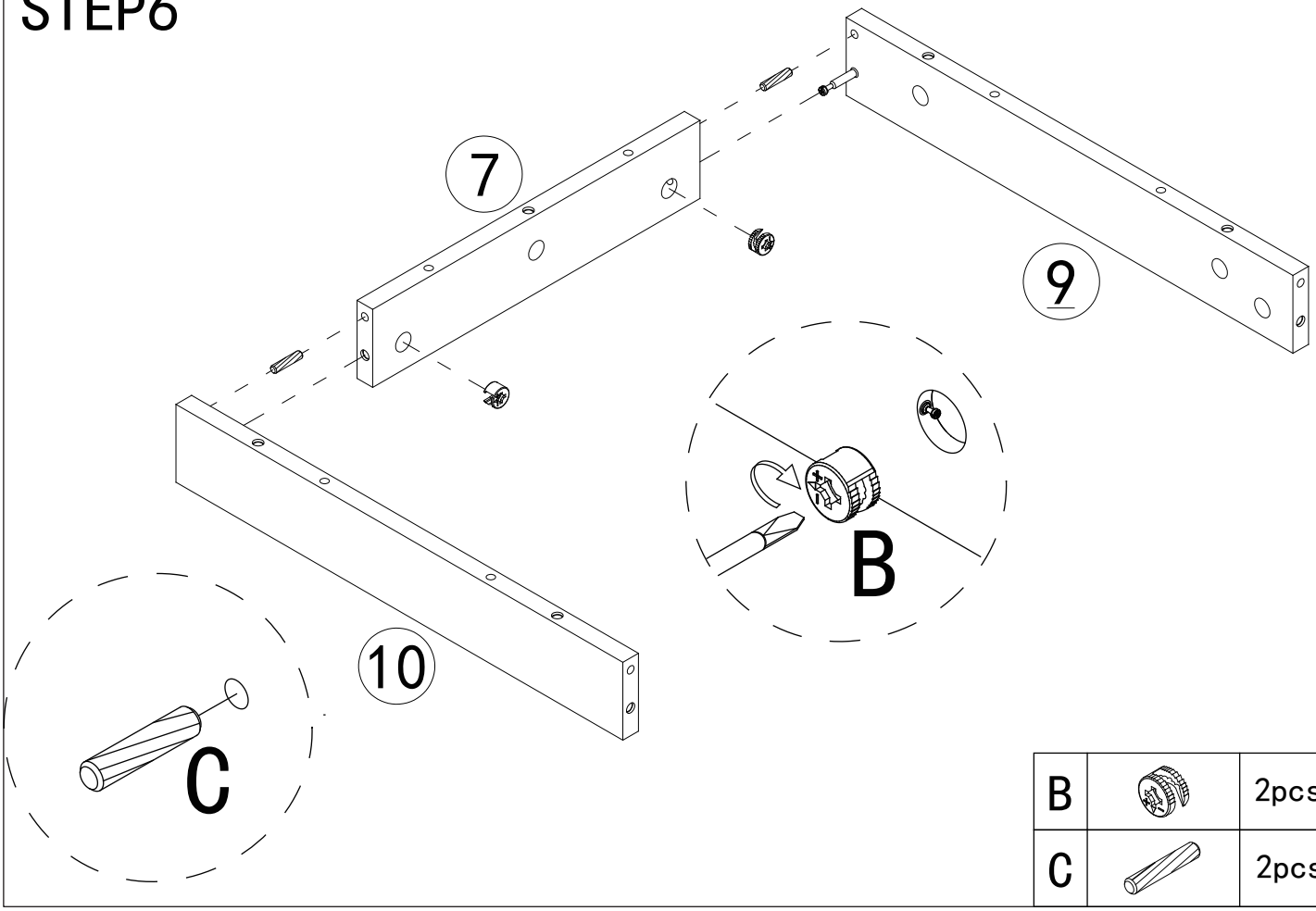

B		2pcs
C		2pcs

STEP7

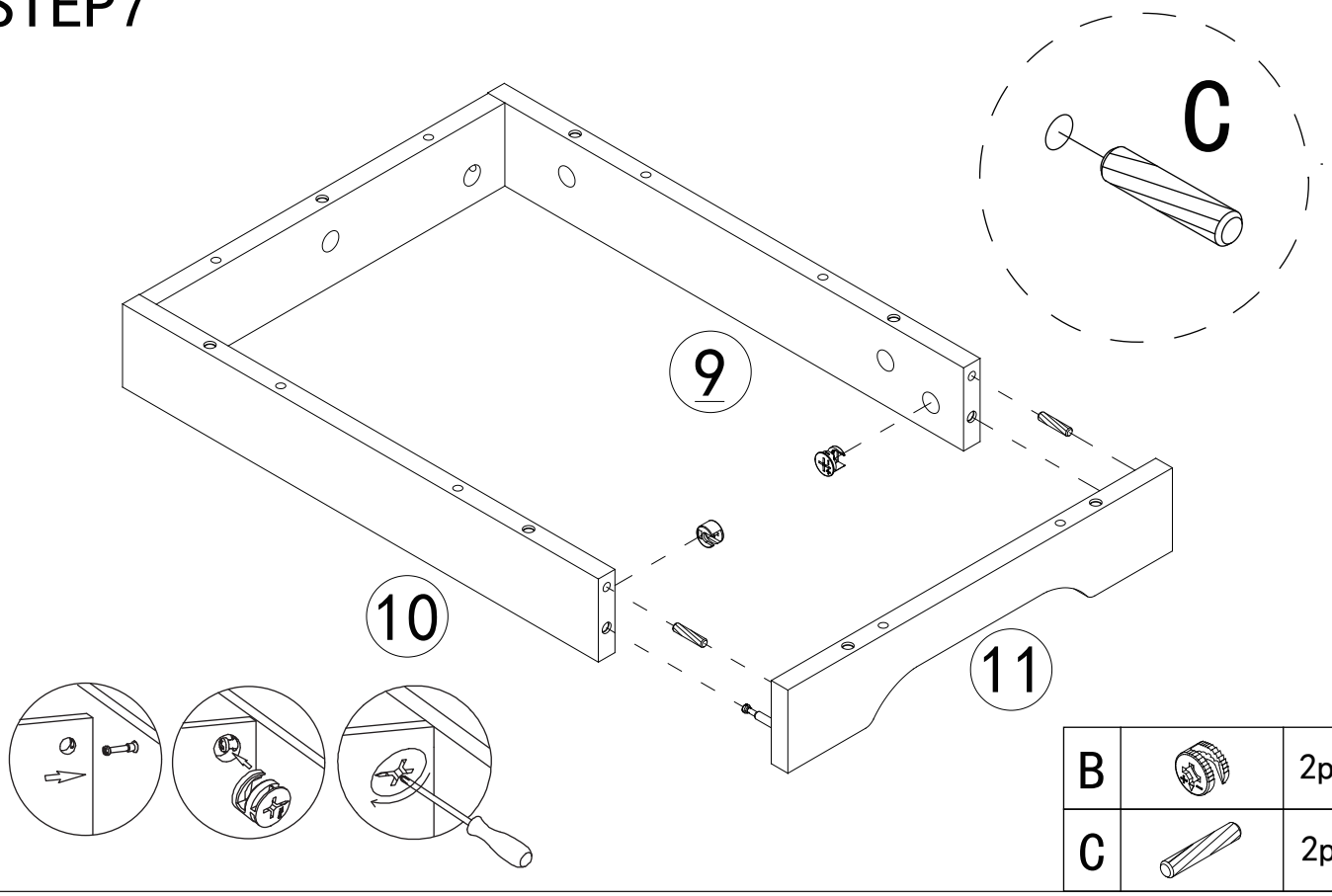

B		2pcs
C		2pcs

STEP8

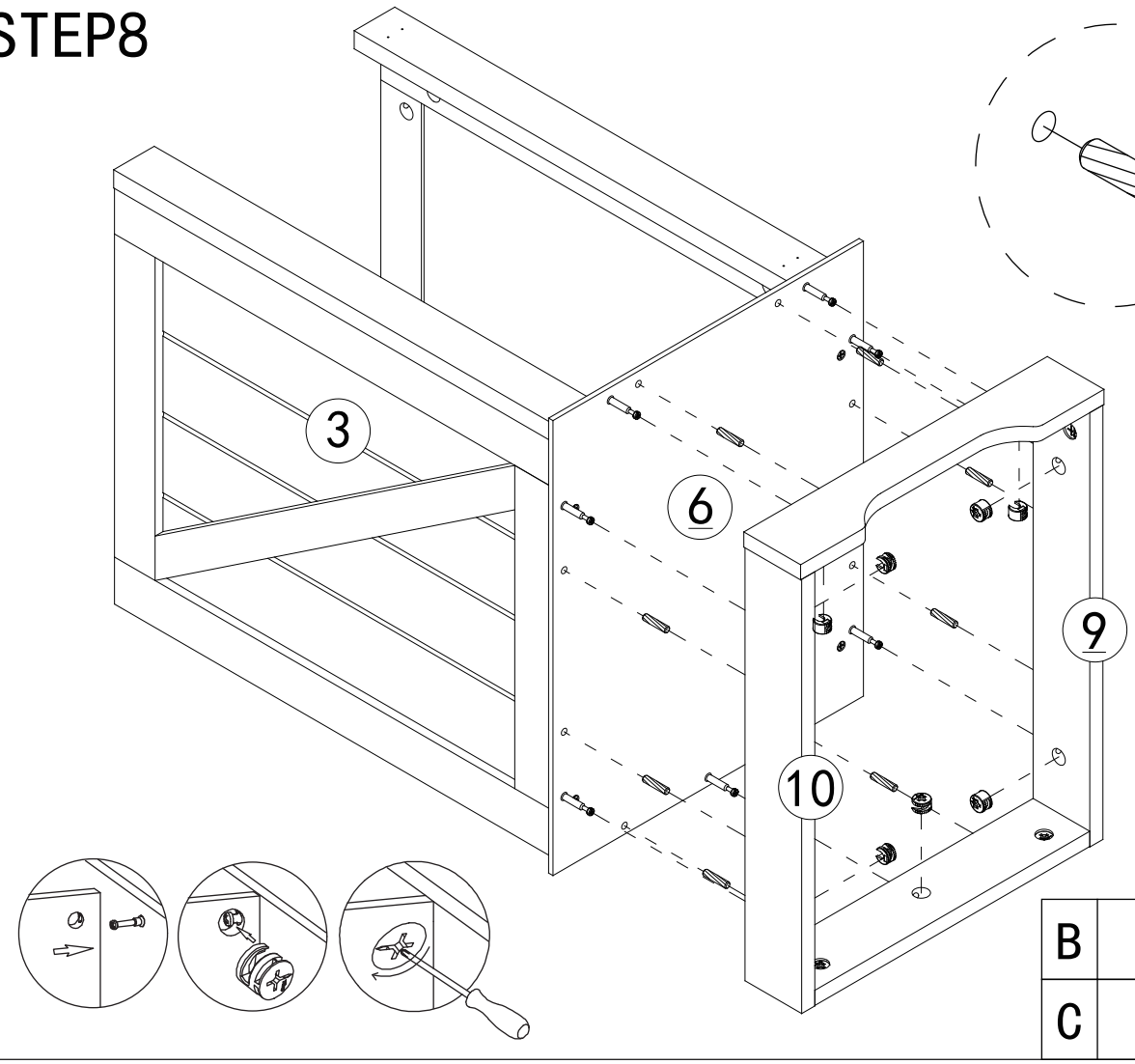

B		7pcs
C		8pcs

STEP9

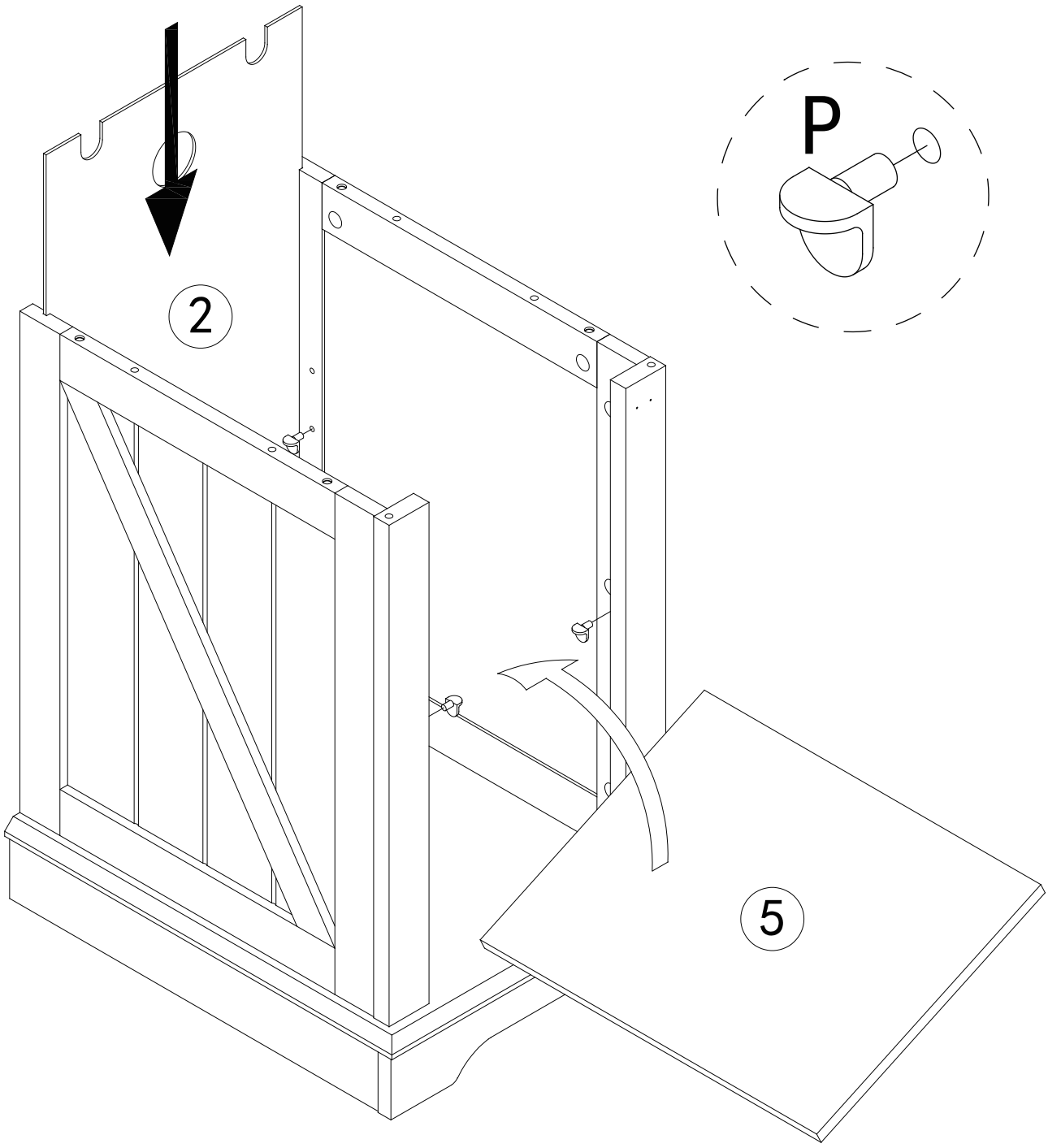

P		4pcs

STEP10

Note: Put the anti-tip deviceD4 on the top, near thebackside, and fix it with a screw D3.

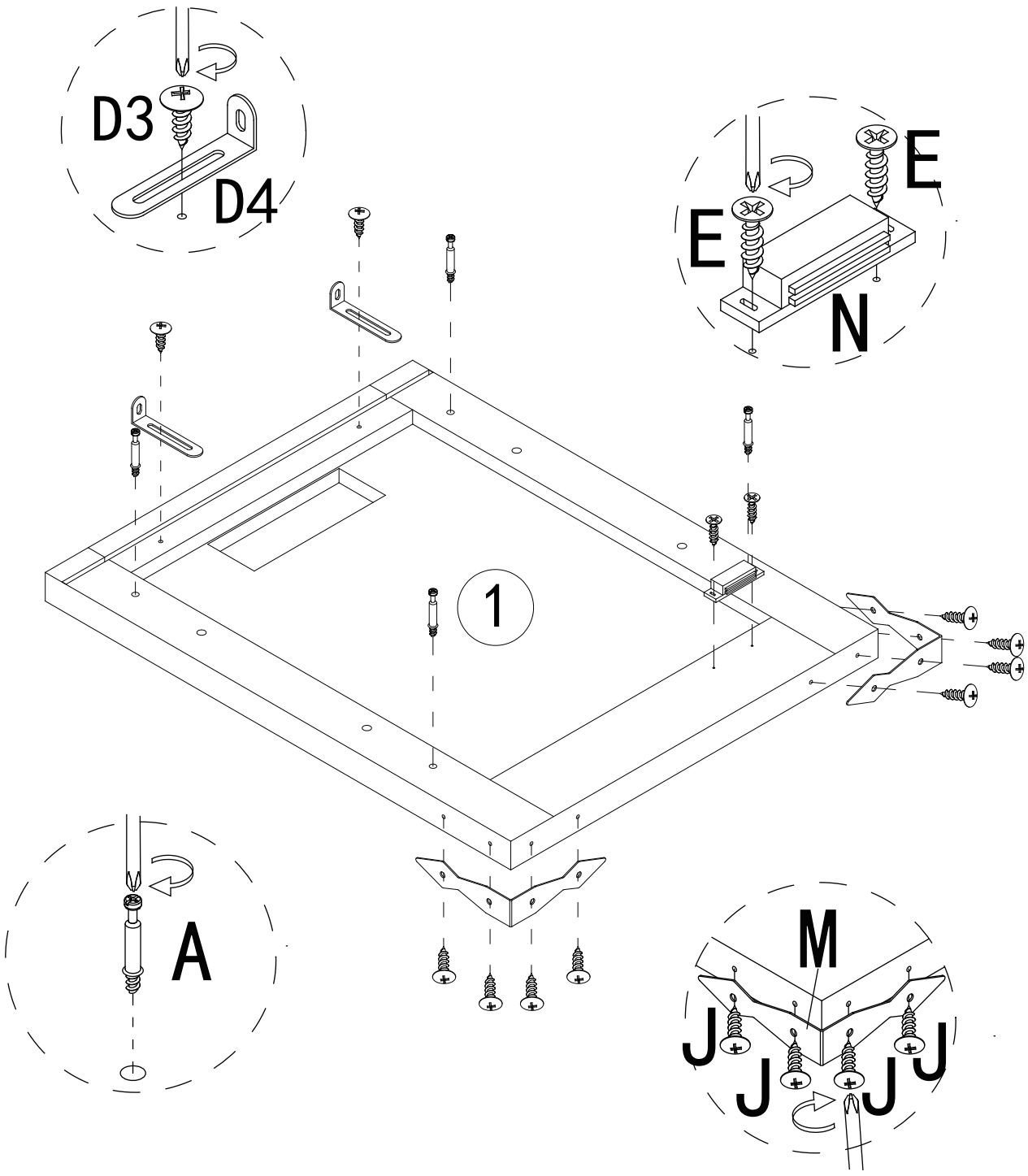

A		4pcs	D	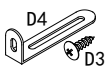	2pcs
E		2pcs	M		2pcs
J		8pcs	N		1pc

STEP11

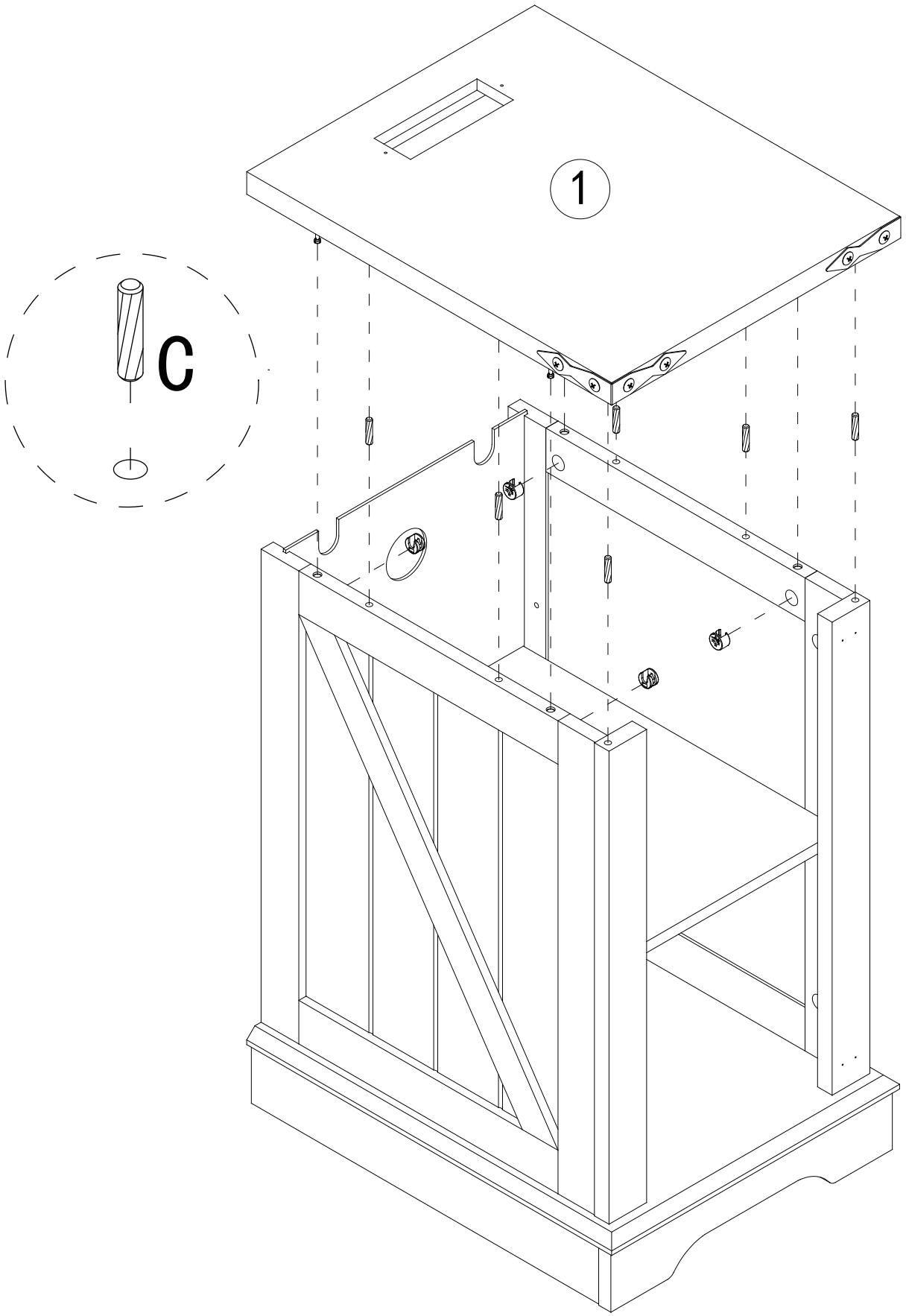

B		4pcs
C		6pcs

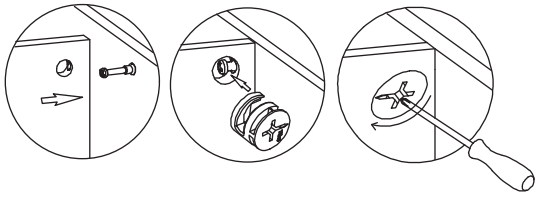

STEP12

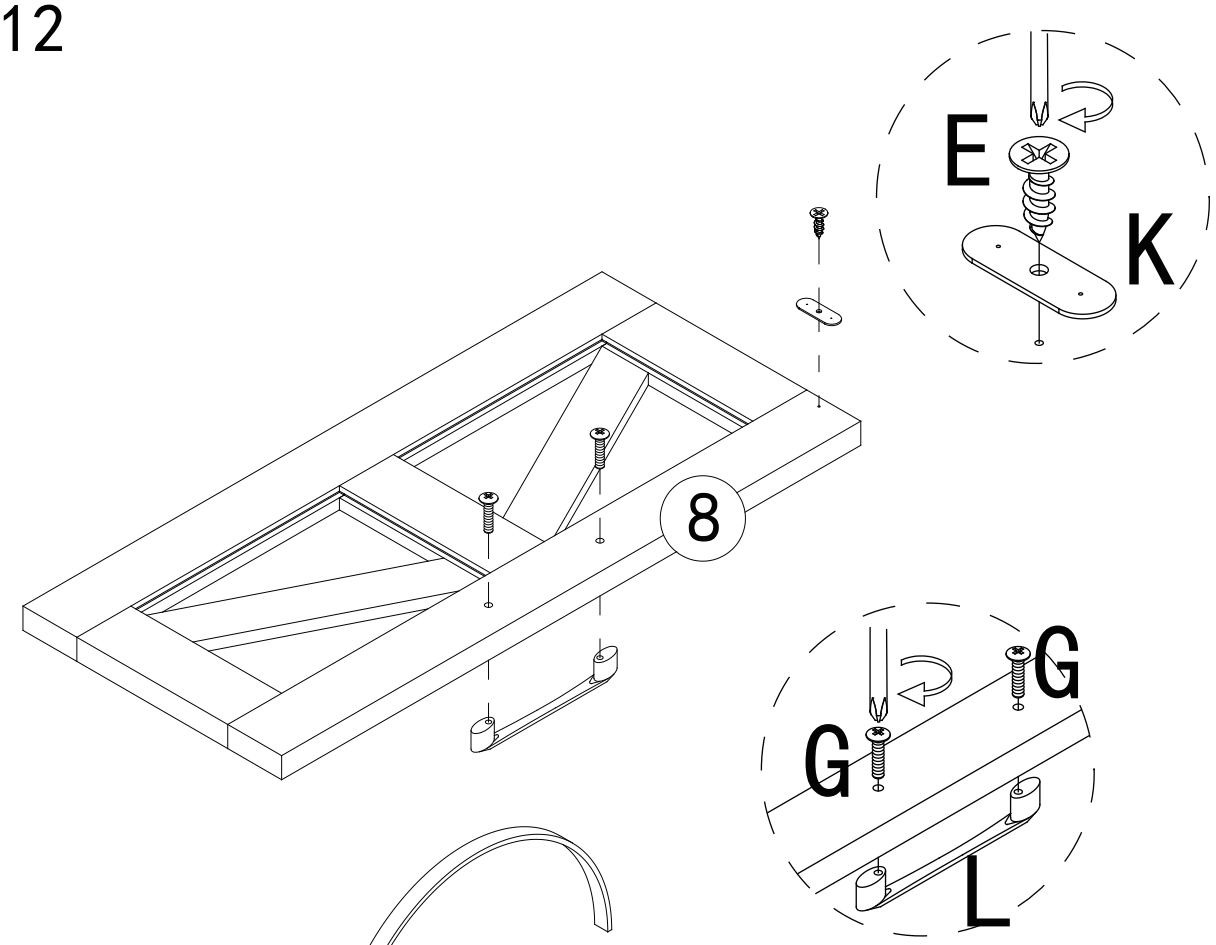

E		1pc
G		2pcs
J		6pcs
K		1pc
L		1pc
O		2pcs

STEP13

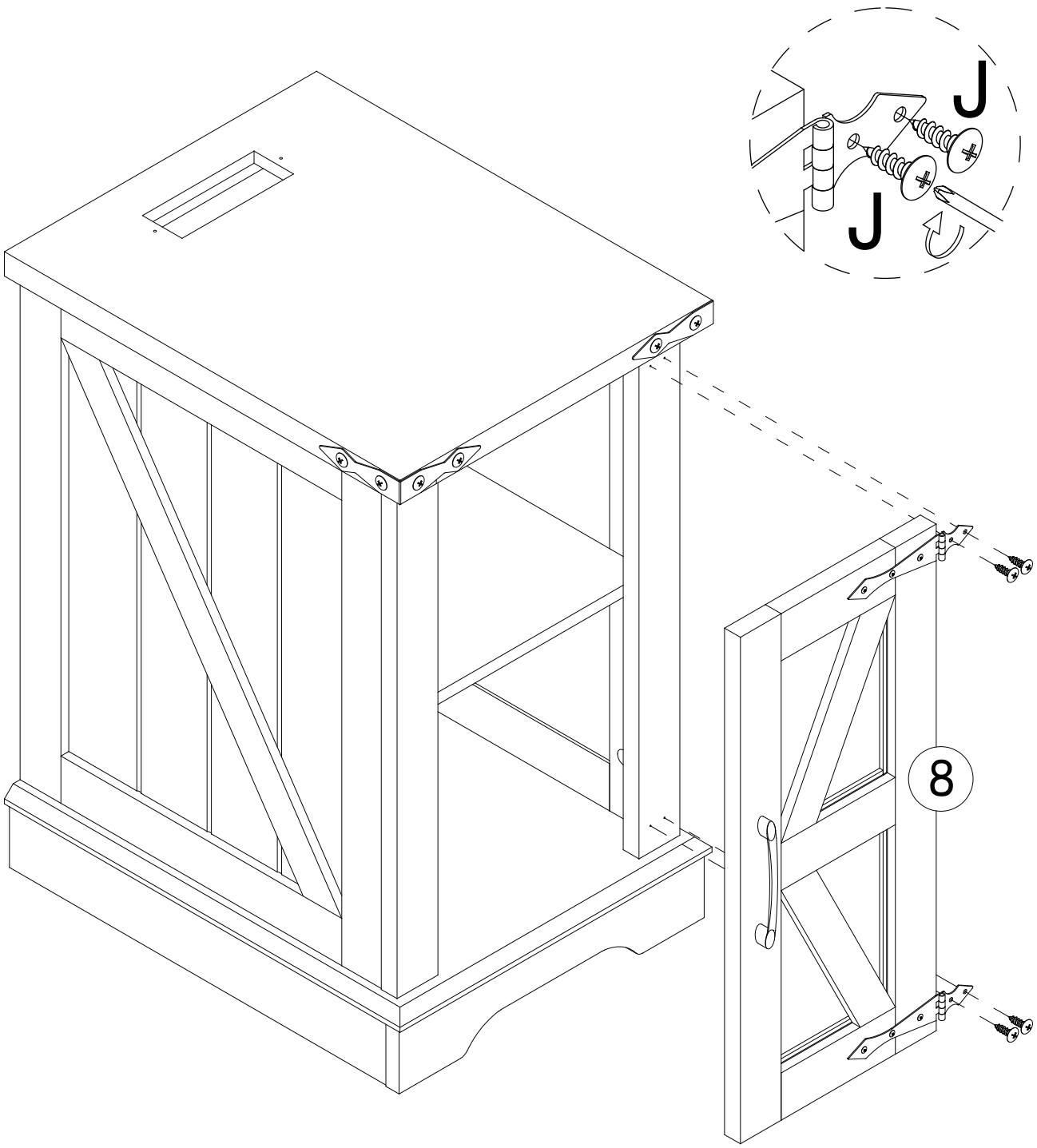

J		4pcs

STEP14

Be sure to install back plate buckle to prevent the cabinet from shaking.

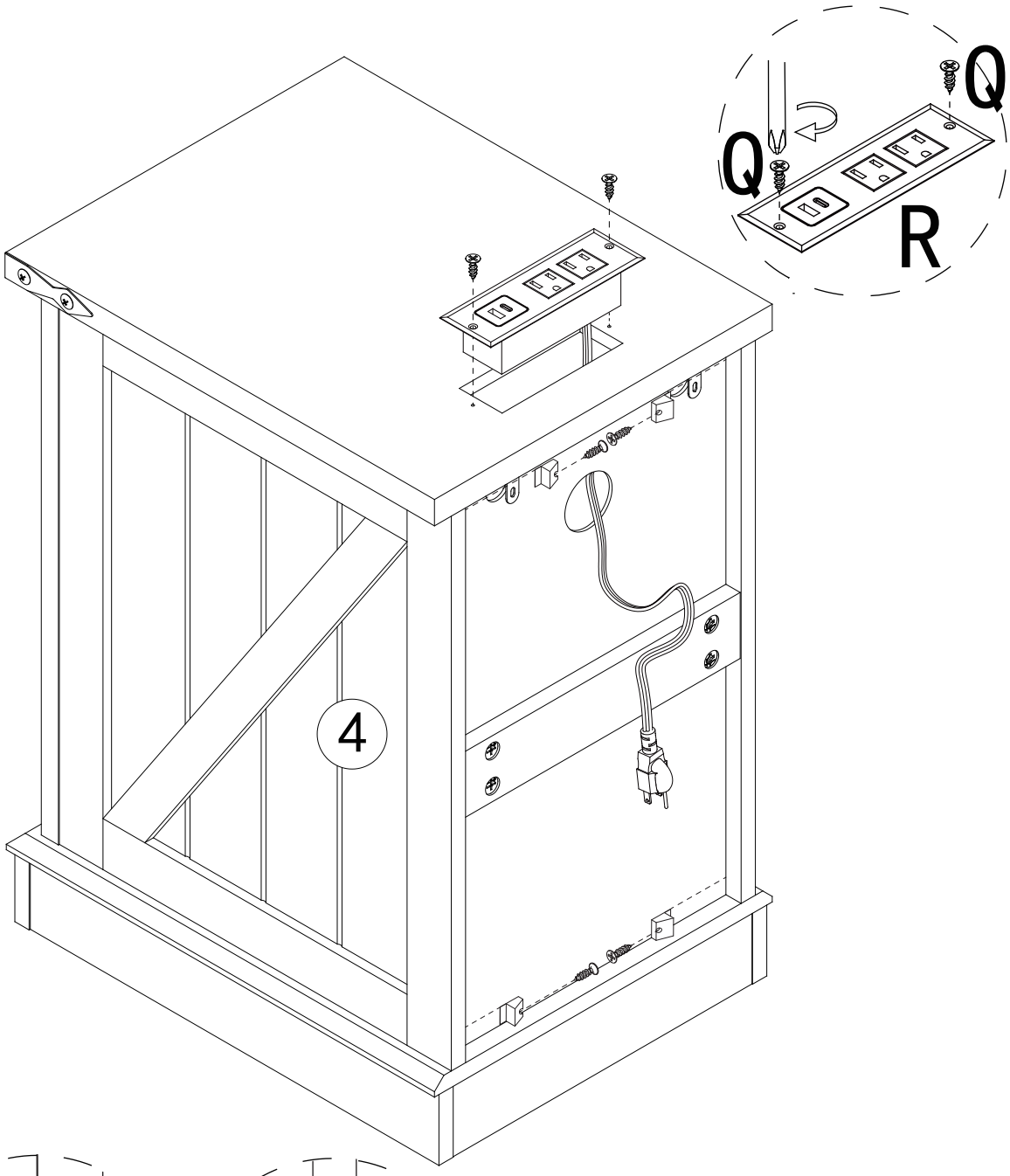

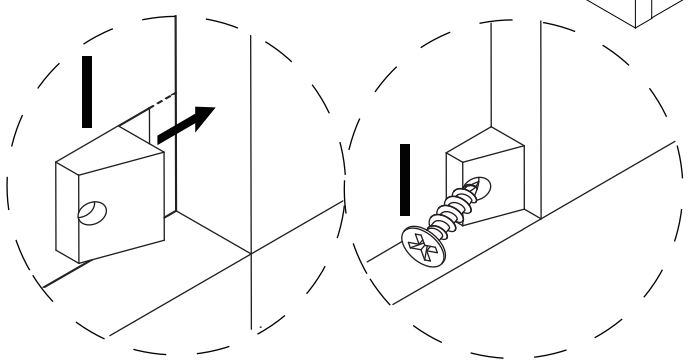

I		4pcs
Q		2pcs
R		1pc

STEP15

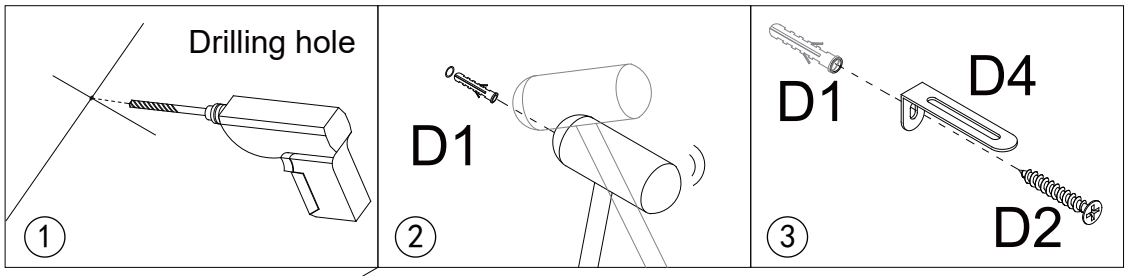

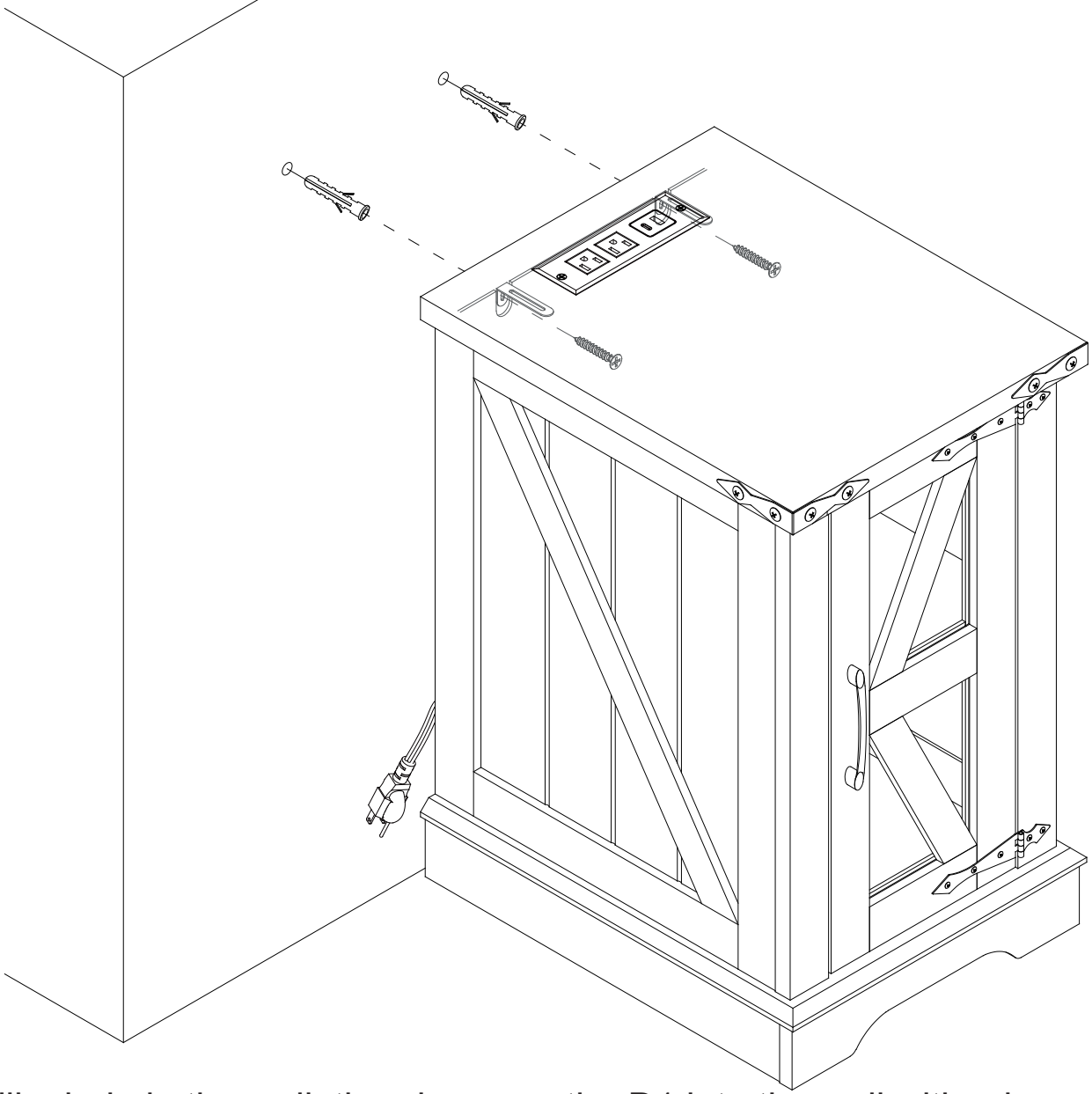

Drill a hole in the wall, then hammer the D1 into the wall with a hammer.

Note: Follow step
link D4 and D1 with a D2 using a screwdriver,and assembly it tightly.

Note: When moving the cabinet, please lift it vertically off the ground. Dragging may cause loose connectors, affecting stability and service life.

D		2pcs