ASSEMBLY INSTRUCTION

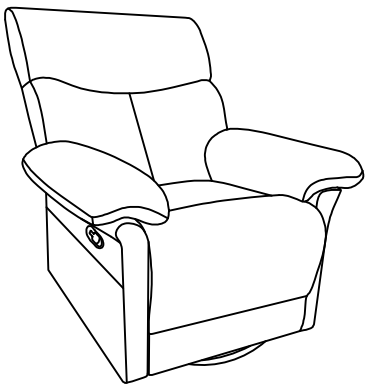

Product Diagram

Parts

A. Pedestal
B. Backrest
C. Cushion(seat)
D. Armrest bag(left)
E. Armrest bag(right)
F. Cushion(back)
G. Back frame(left)
H. Back frame(right)

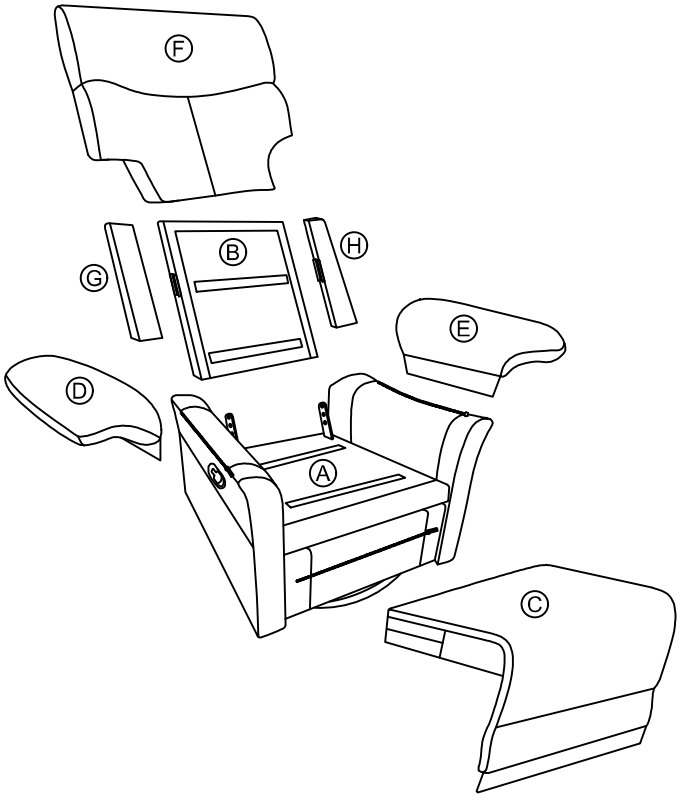

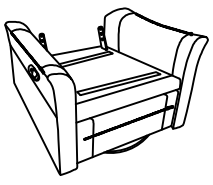

A*1



B*1

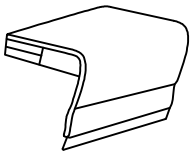

C*1



D*1



E*1

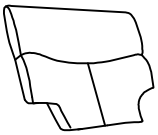

F*1



G*1



H*1

STEP 1:

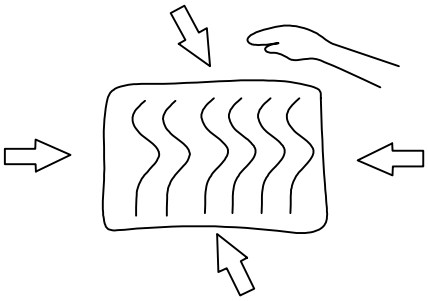

1.After removing the cushion from the compress bag,please allow air to flow through the cushion for few days.
You can try to fluff cushion by push in and push out on all four sides of the cushion. Hitting the top/front of the cushion with your hand to fluff them after installation.

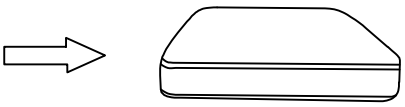

2.Please allow at least 72 hours for the cushions to recover to its natural state after removing from the package.

STEP 2:

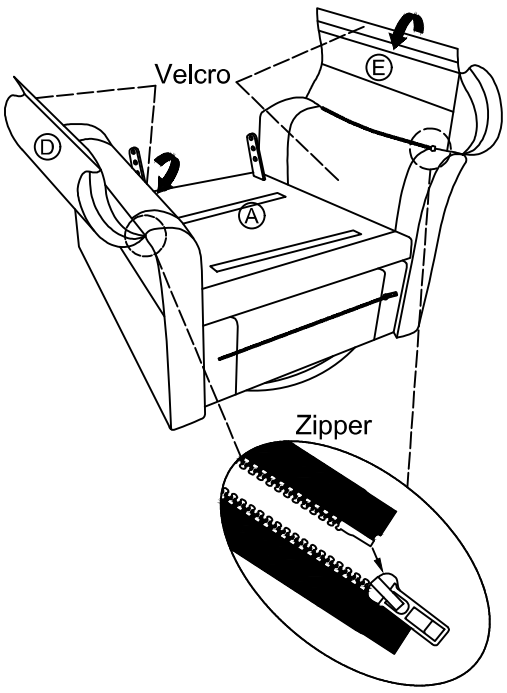

STEP 3:

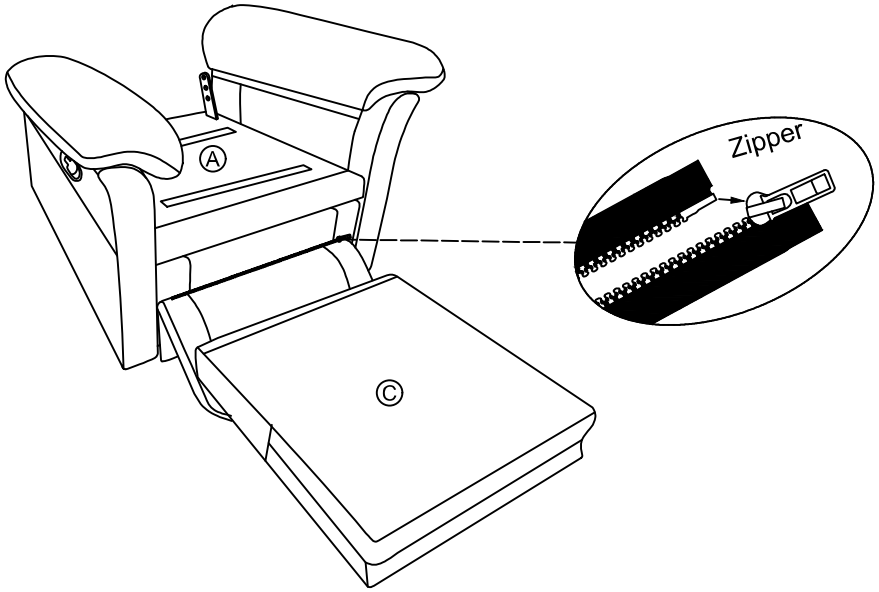
Zipper
Ⓐ
Ⓒ

STEP 4:

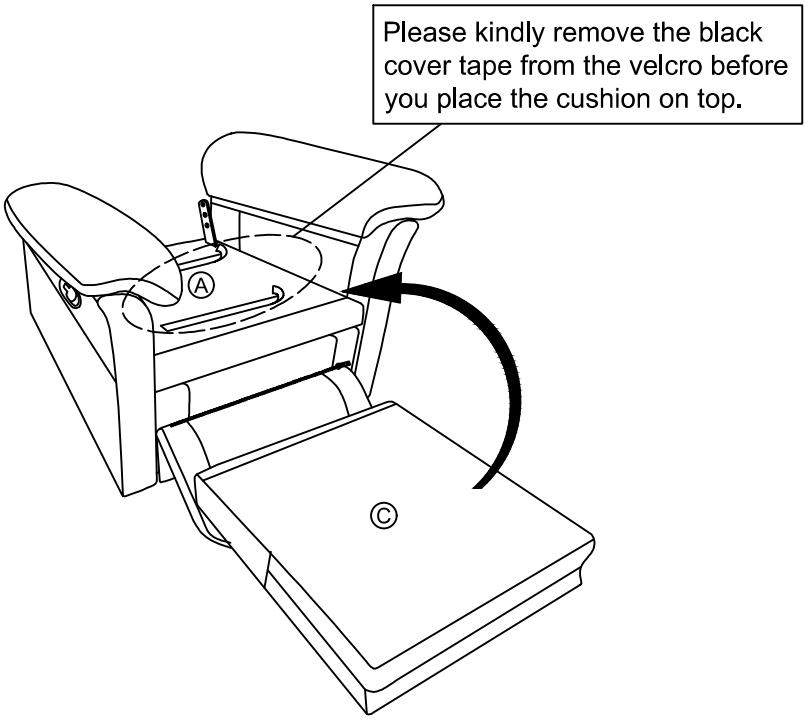
Please kindly remove the black cover tape from the velcro before you place the cushion on top.
Ⓐ
Ⓒ

STEP 5:

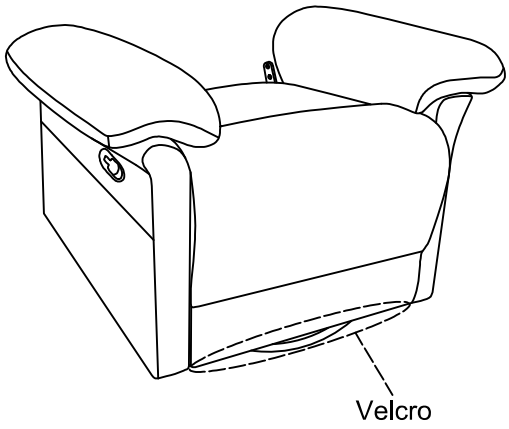
Velcro

STEP 6:

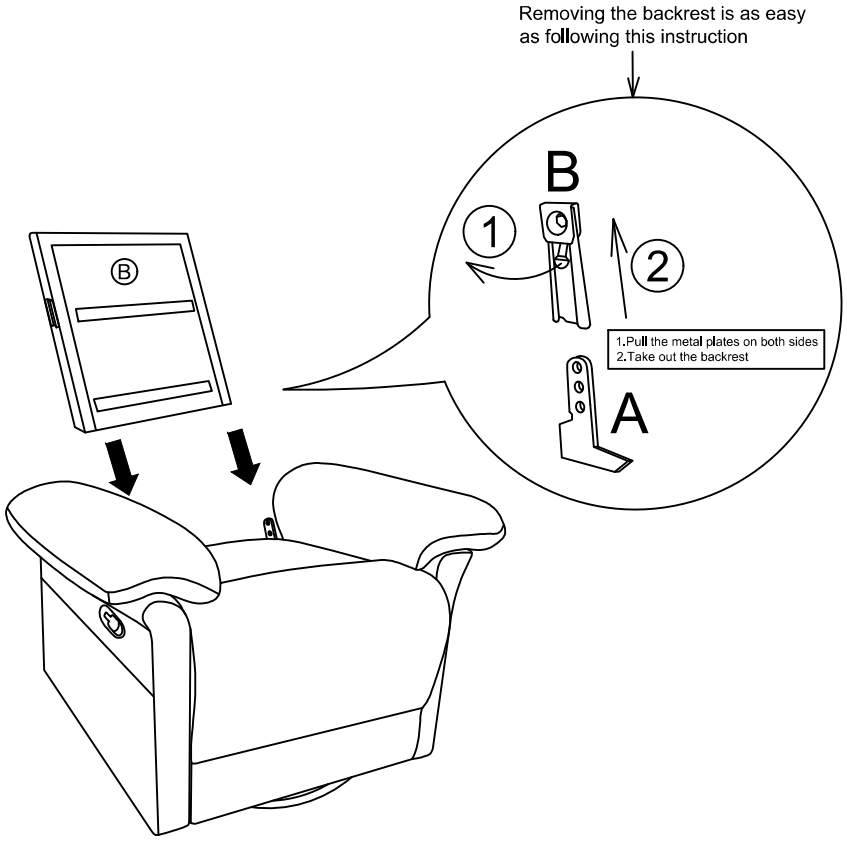
Removing the backrest is as easy as following this instruction
B
1
2
1.Pull the metal plates on both sides
2.Take out the backrest
A
B

STEP 7:

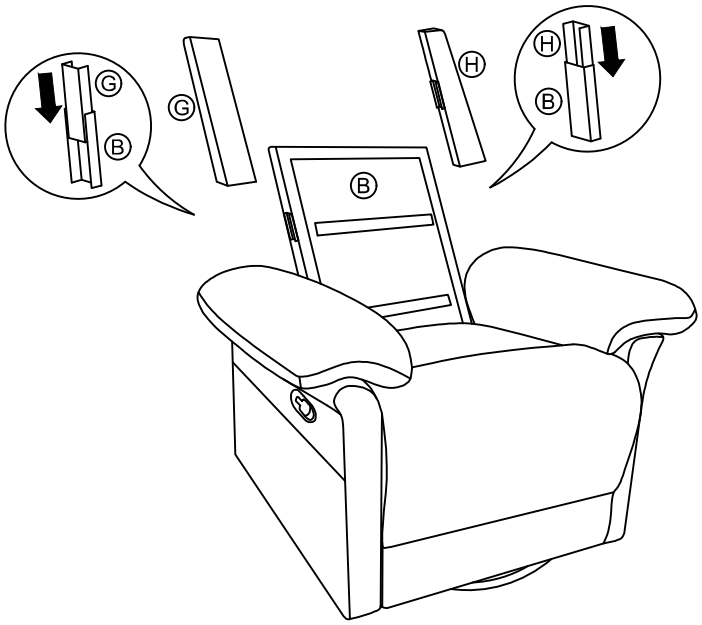

STEP 8:

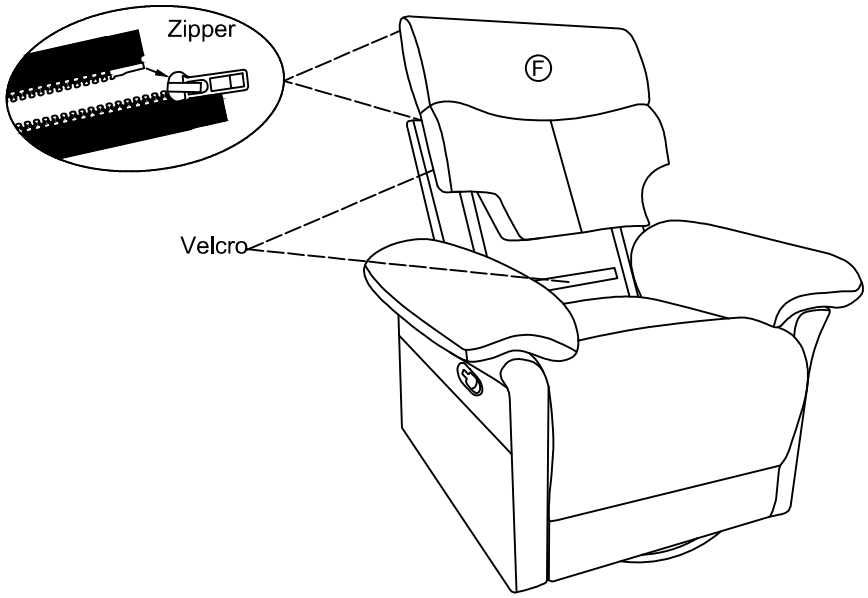

STEP 9:

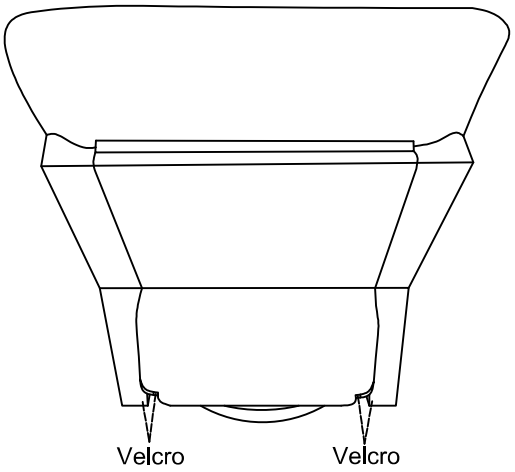

STEP 10:

