Kids Bookshelf & Toy Organizer

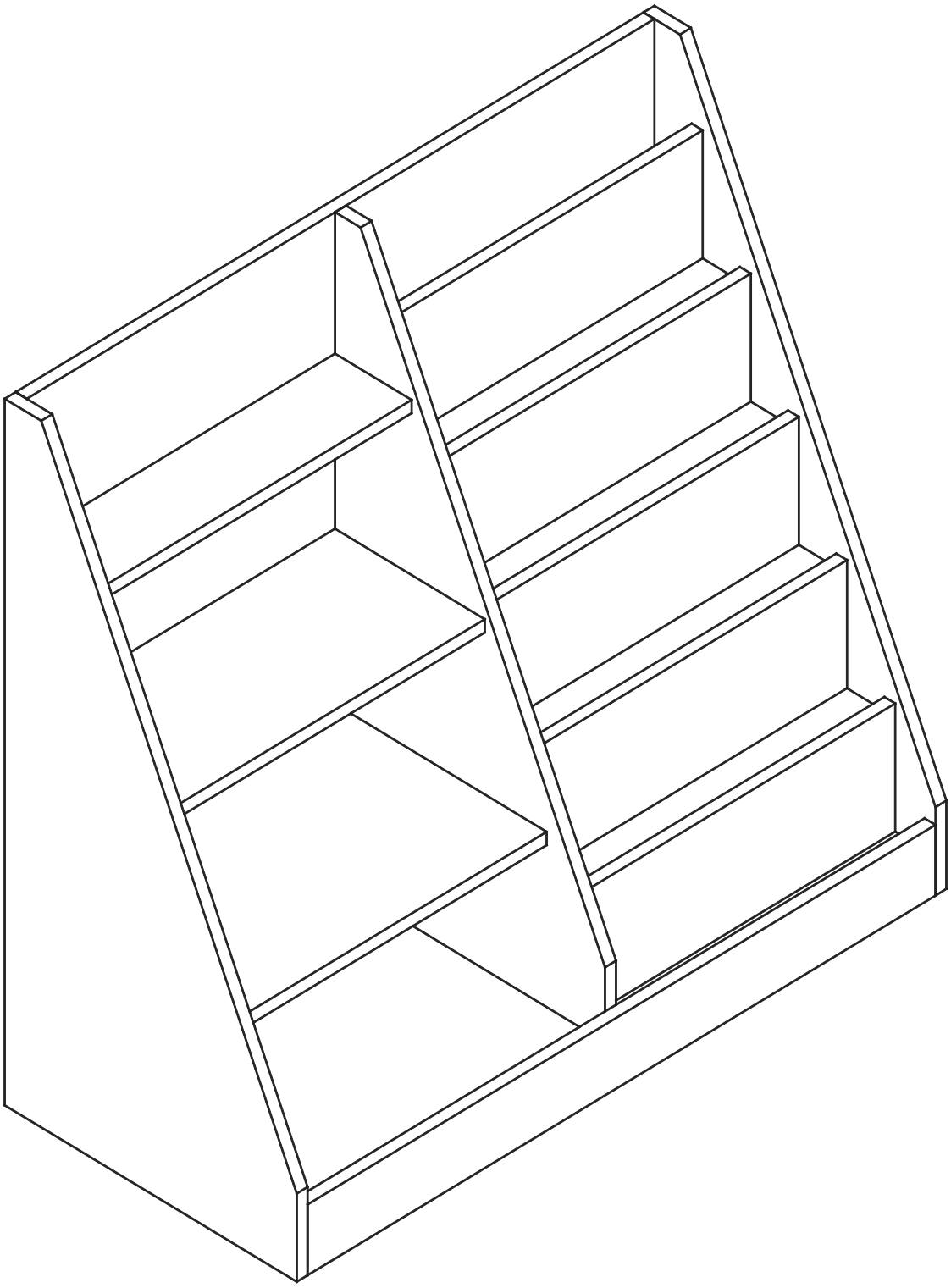

General Guidelines

Please read the following instructions carefully before installing and using the product.
Please keep this manual and hand it over when you transfer the product.
This summary may not include every detail of all variations and considered steps.
Please contact us when further information and help are needed.

Notes

It is recommended that two people assemble the product. Please follow the assembly steps strictly.
During assembly, align all screws with the corresponding pre-drilled holes first and then tighten the screw one by one.
This product is for indoor use only. Don't place it in humid areas for long time to prevent mildew.
Avoid sharp objects or corrosive chemicals to prevent damage to the product.

Warnings

Children are not allowed to assemble the product. During assembly, keep all parts and packaging materials away from children as there could be injury and potential choking hazarde.
Children are not allowed to stand, climb or play on the product to avoid serious bodily injury by the toppling.
Never use the product if any part is missing or defective. Otherwise,there will be a hazard.
Maximum load capacity per shelf: 5 kg (11 lbs).Do not place overweight items on it.

Parts List

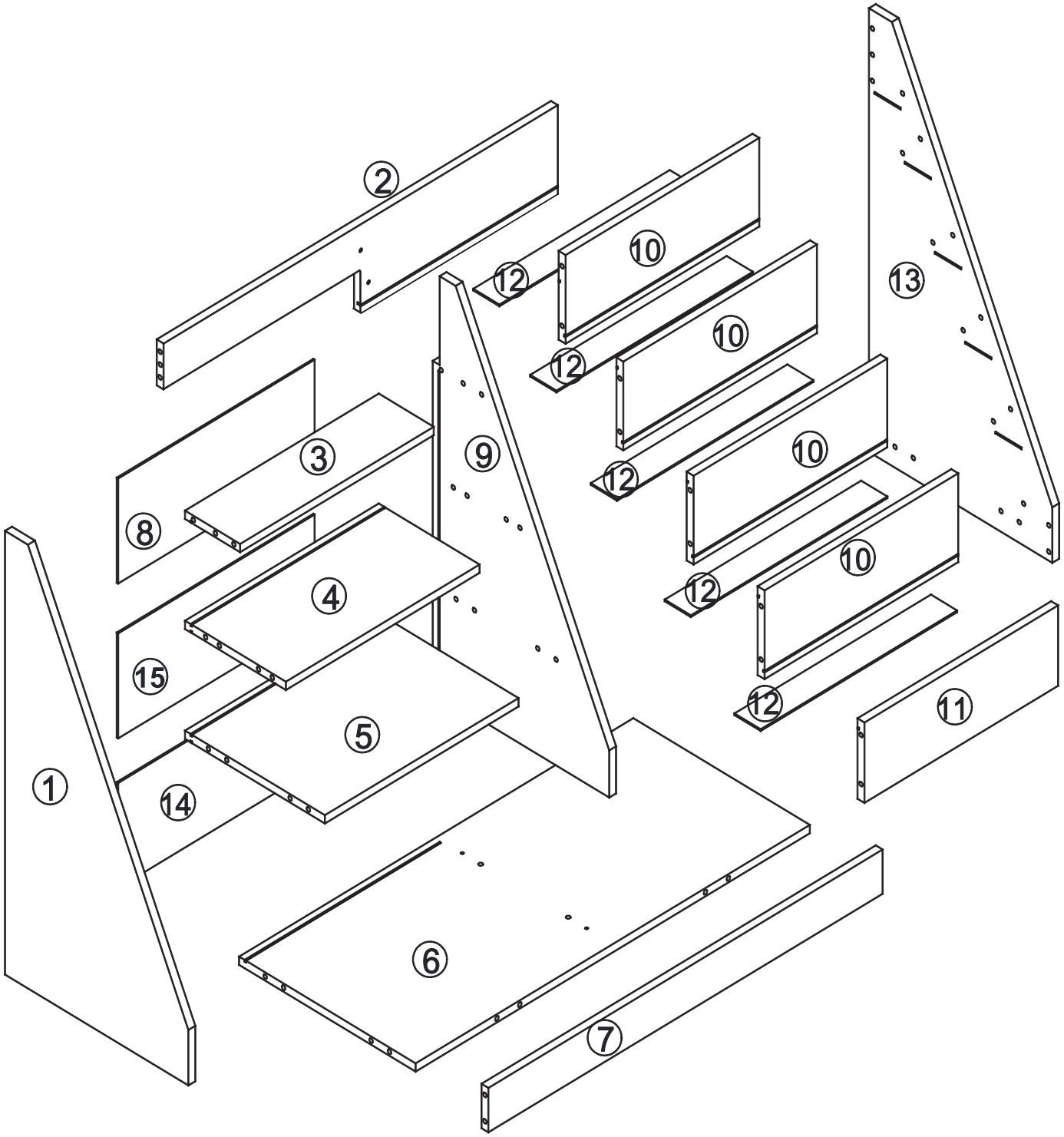

Hardware List

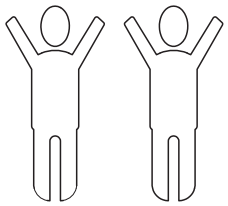
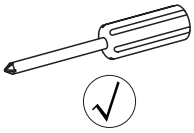
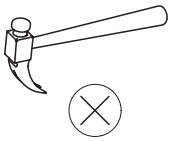
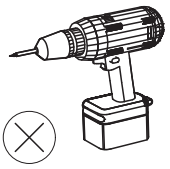

① 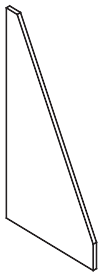 x 1PC	② 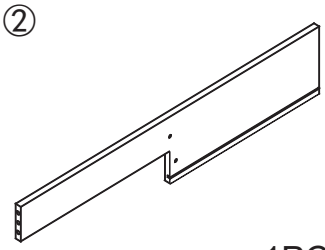 x 1PC	③ 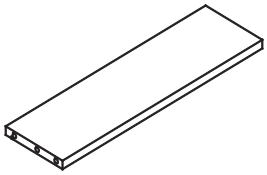 x 1PC	④ 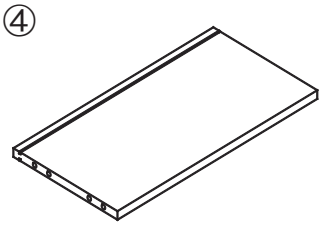 x 1PC
⑤ 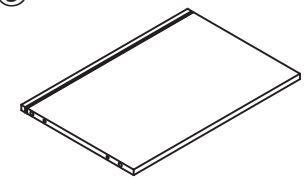 x 1PC	⑥ 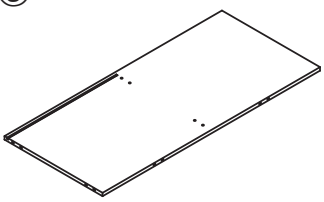 x 1PC	⑦ 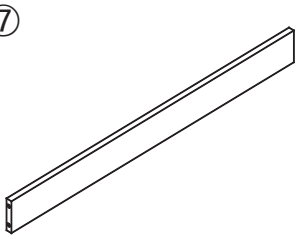 x 1PC	⑧ 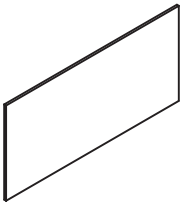 x 1PC
⑨ 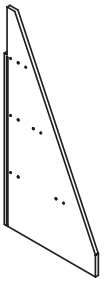 x 1PC	⑩ 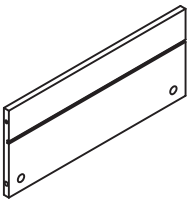 x 4PCS	⑪ 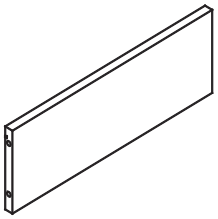 x 1PC	⑫ 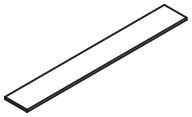 x 5PCS
⑬ 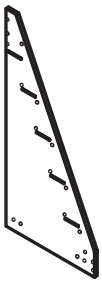 x 1PC	⑭ 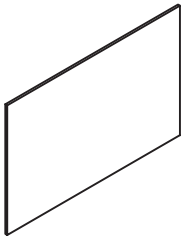 x 1PC	⑮ 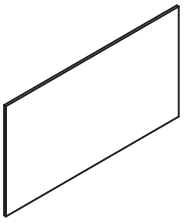 x 1PC	Ⓐ  32+1PCS
Ⓑ  32+1PCS	Ⓒ 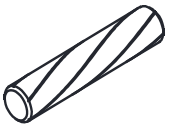 M6X30MM 35+1PCS	Ⓓ 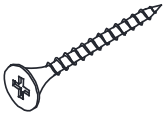 3+1PCS	Ⓔ 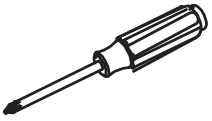 x 1PC

Instructions For Fastening
CAM-BOLT and CAM-LOCK

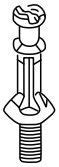

CAM-BOLT



CAM-LOCK

Tools Required

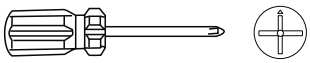

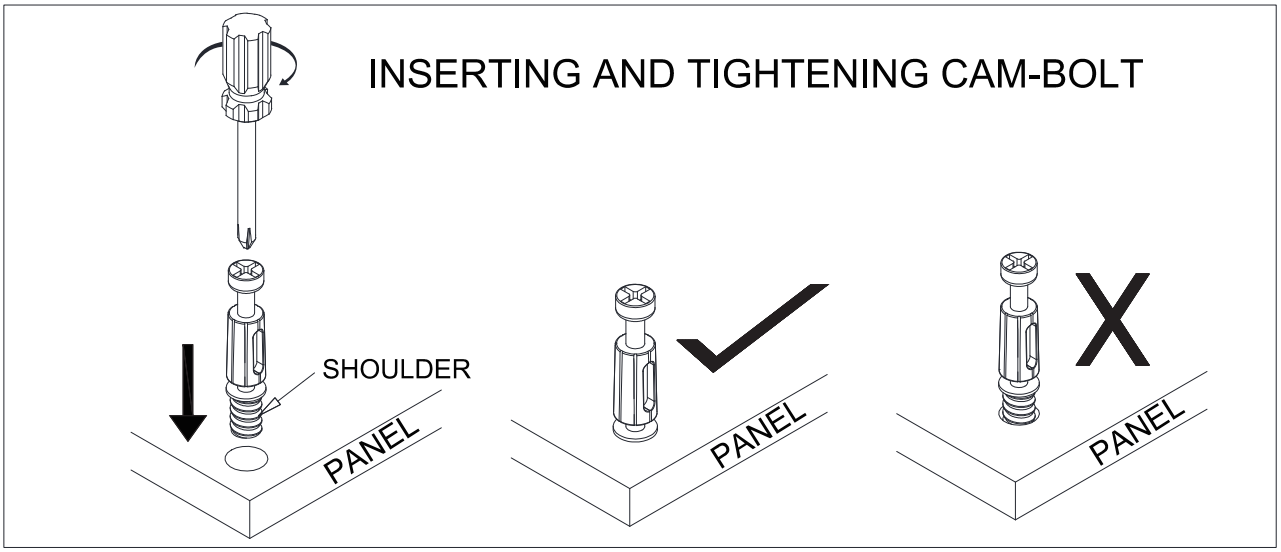

Place Cam-bolt on pre-drilled hole and screw in vertically

Shoulder is flushed (on the same level) with the panel.

Shoulder is above the panel.

Place the cam bolt into the designated pre-drilled hole on the panel. Use a Phillips screwdriver to screw in the cam bolt vertically until the shoulder is flush with the panel surface.

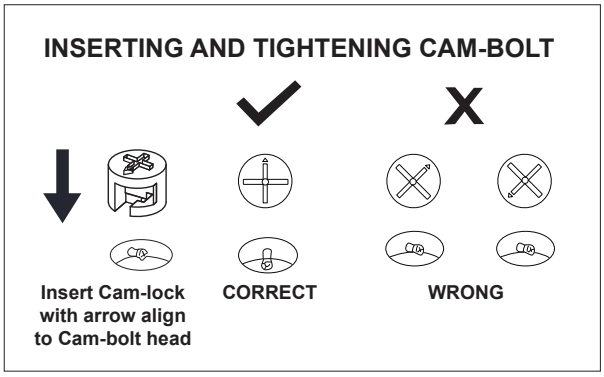

Align the arrow on the Cam-lock to the Cam-bolt head and Insert the Cam-lock. Ensure Cam-lock is fully inserted.

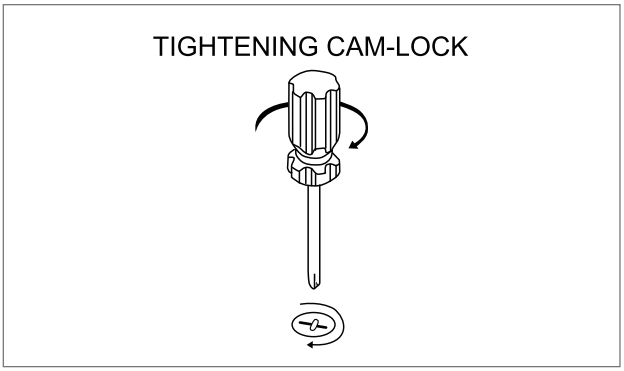

Use a flat-head screwdriver to turn the cam lock clockwise until it locks onto the head of the cam bolt. Turn approximately ¾ of a turn until snug—do not overtighten, as this may damage the cam lock or cam bolt.

Step1

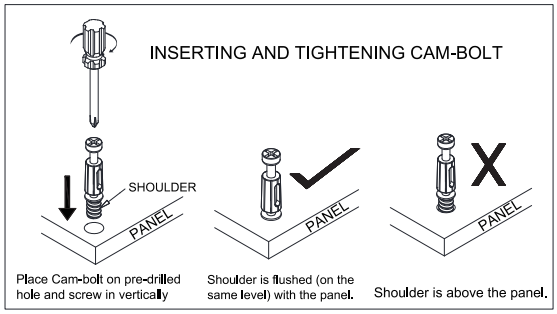

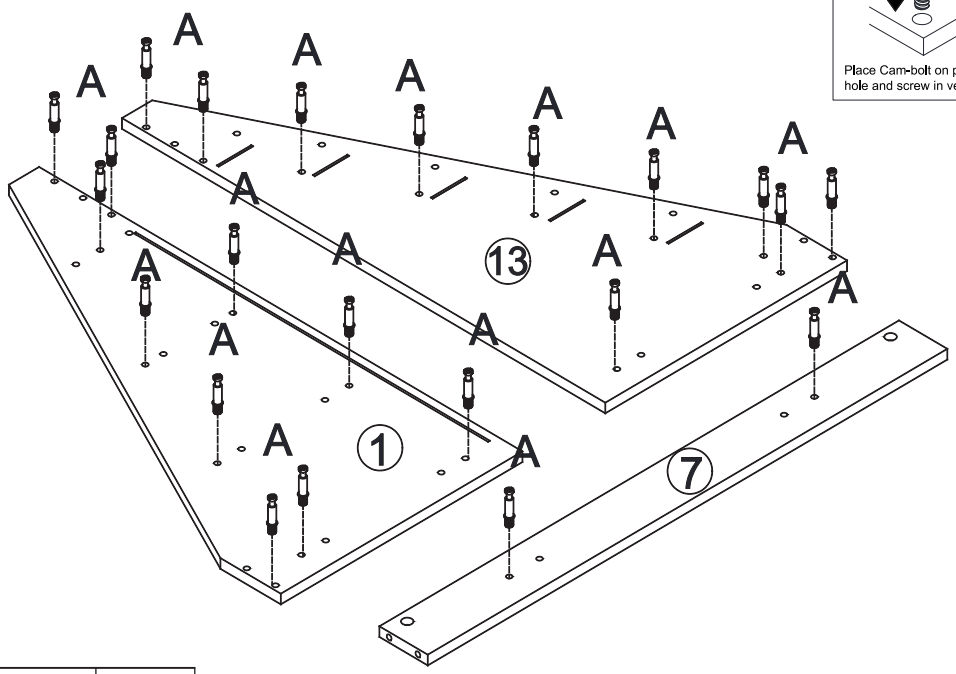

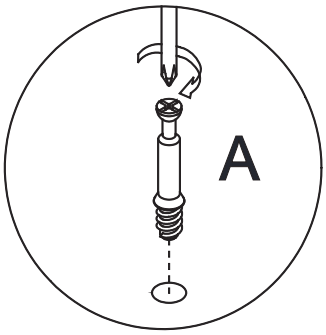

A x 22

Step2

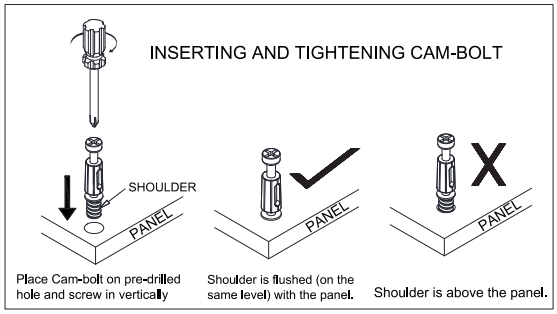

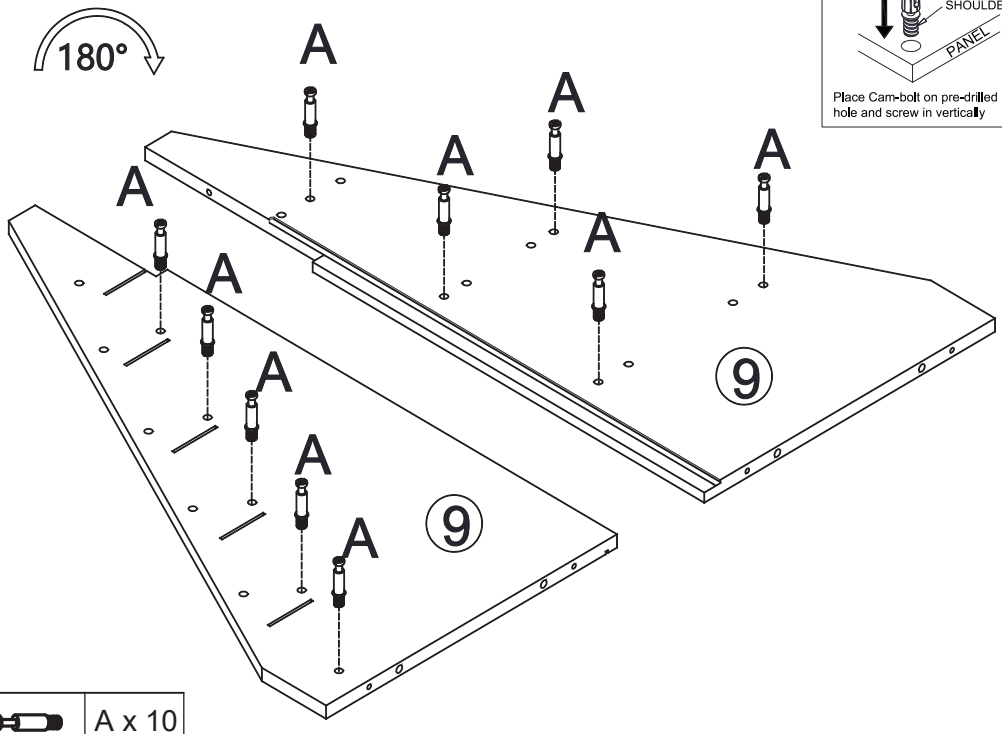

A x 10

Step3

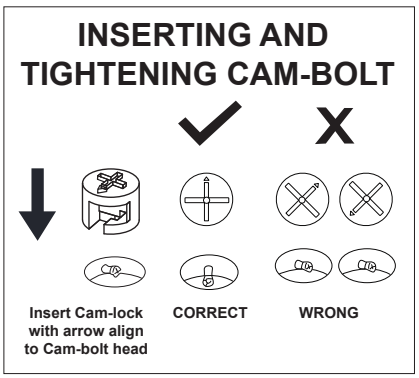

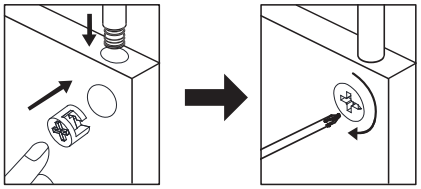

For details, see Page3 .

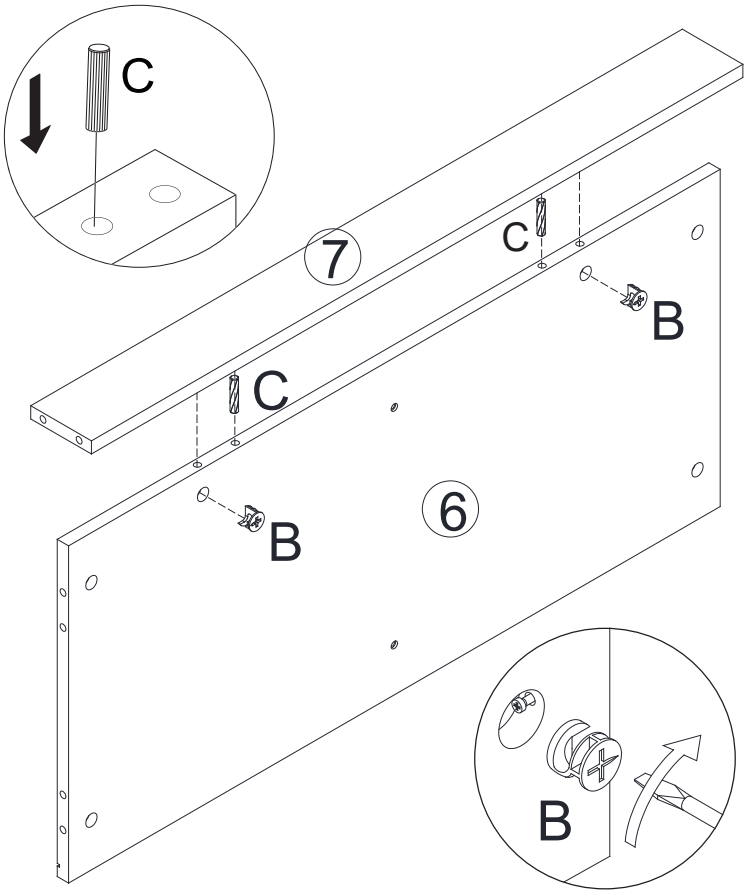

	B x 2
	C x 2

Step4

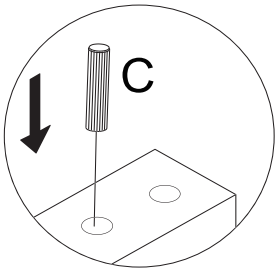

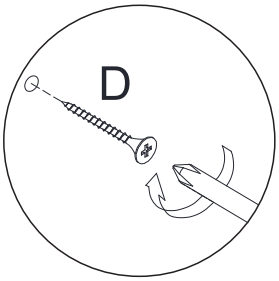

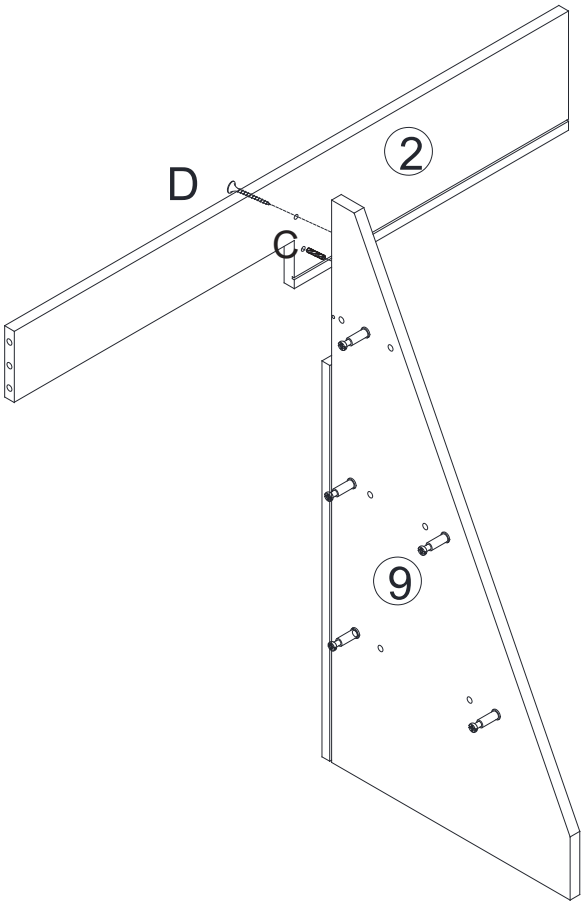

	C x 1
	D x 1

Step5

INSERTING AND TIGHTENING CAM-BOLT

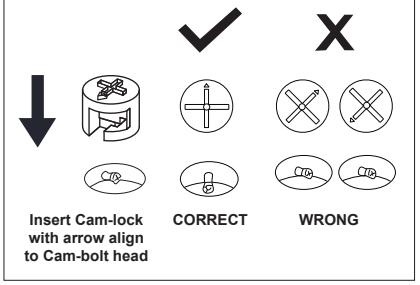

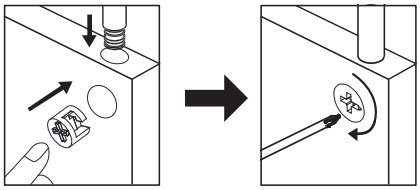

For details, see Page3.

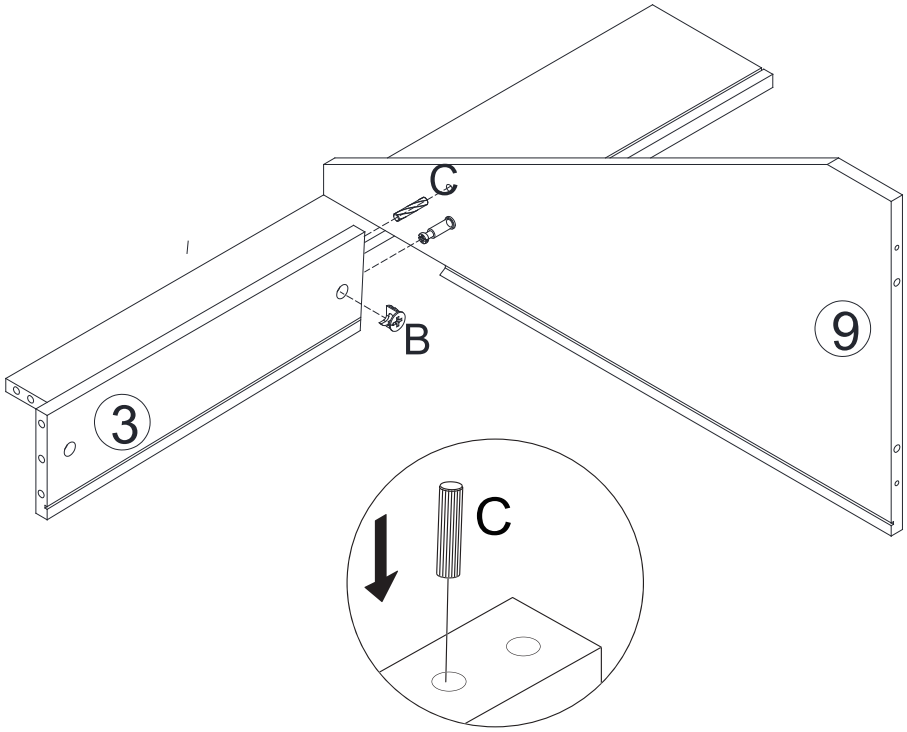

	B x 1
	C x 1

Refer to the illustration and check **part B hole direction.**
Align grooves on panel③perpendicular to the groove on panel

Step6

INSERTING AND TIGHTENING CAM-BOLT

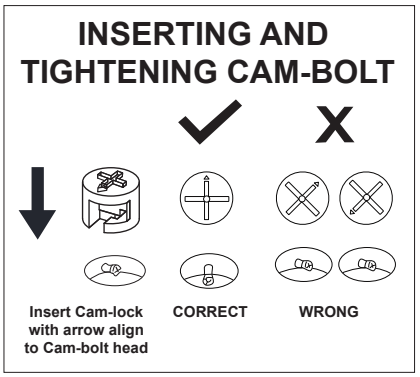

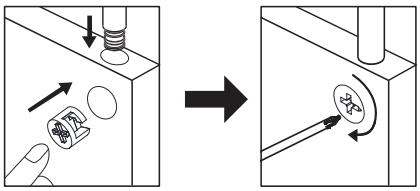

For details, see Page3.

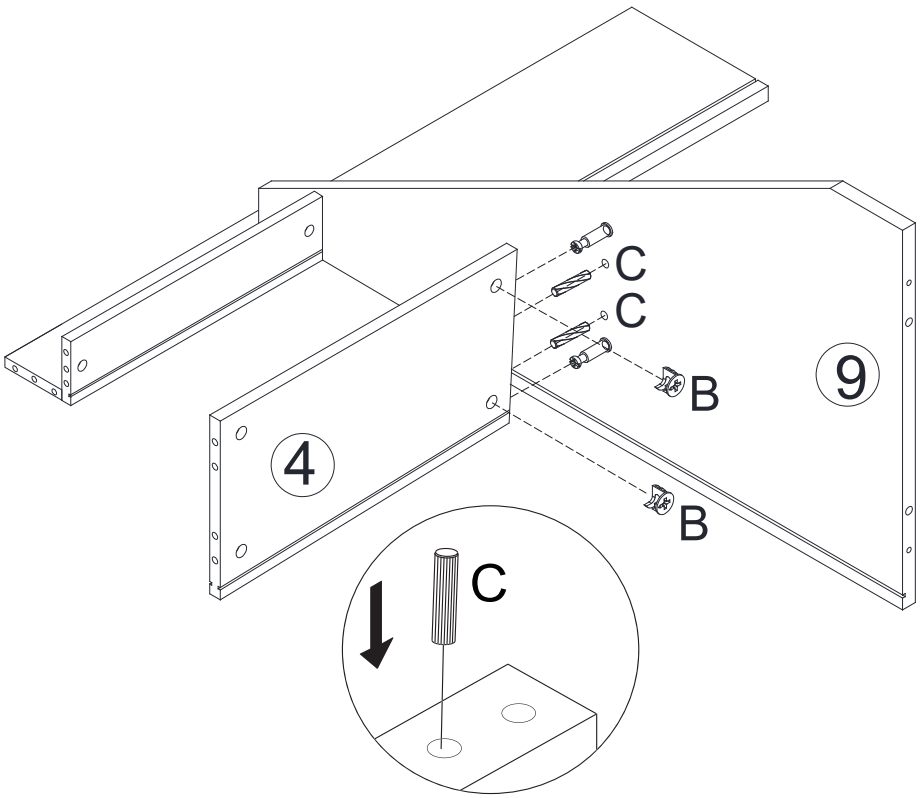

	B x 2
	C x 2

Refer to the illustration and check **part B hole direction.**
Align grooves on panel④perpendicular to the groove on panel

Step7

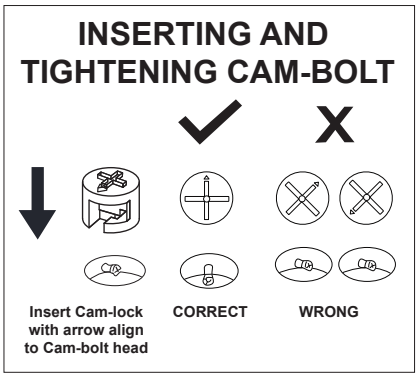

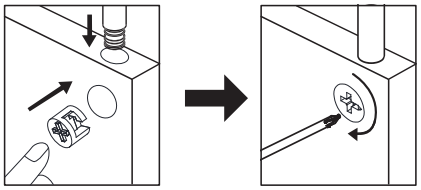

For details,
see Page3.

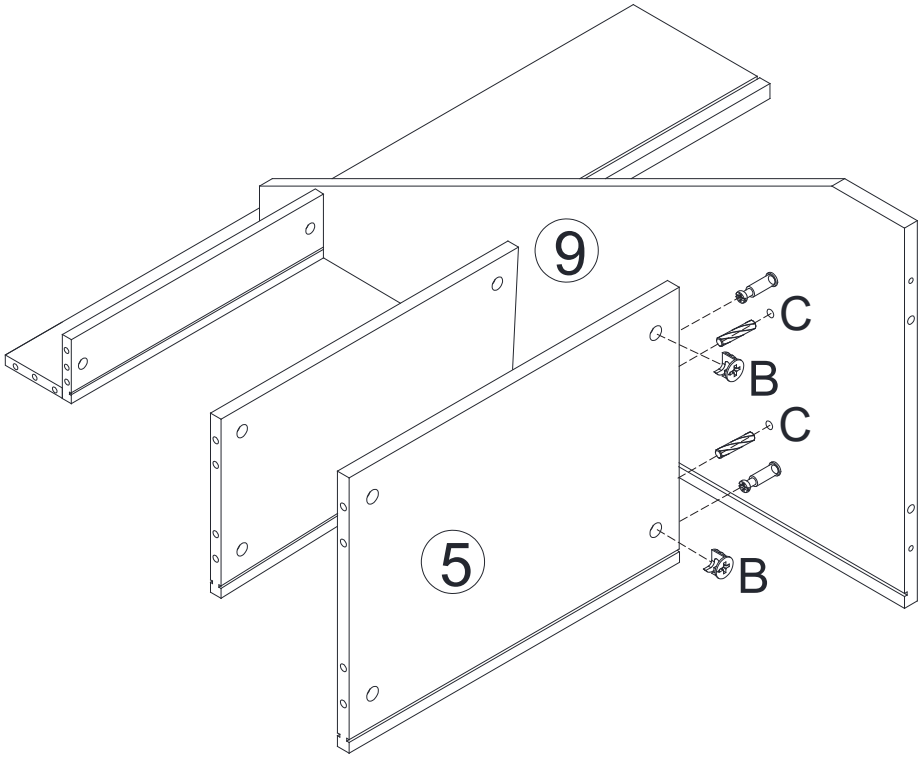

	B x 2
	C x 2

Refer to the illustration and check **part B hole direction.**
Align grooves on panel ⑤ perpendicular to the groove on panel

Step8

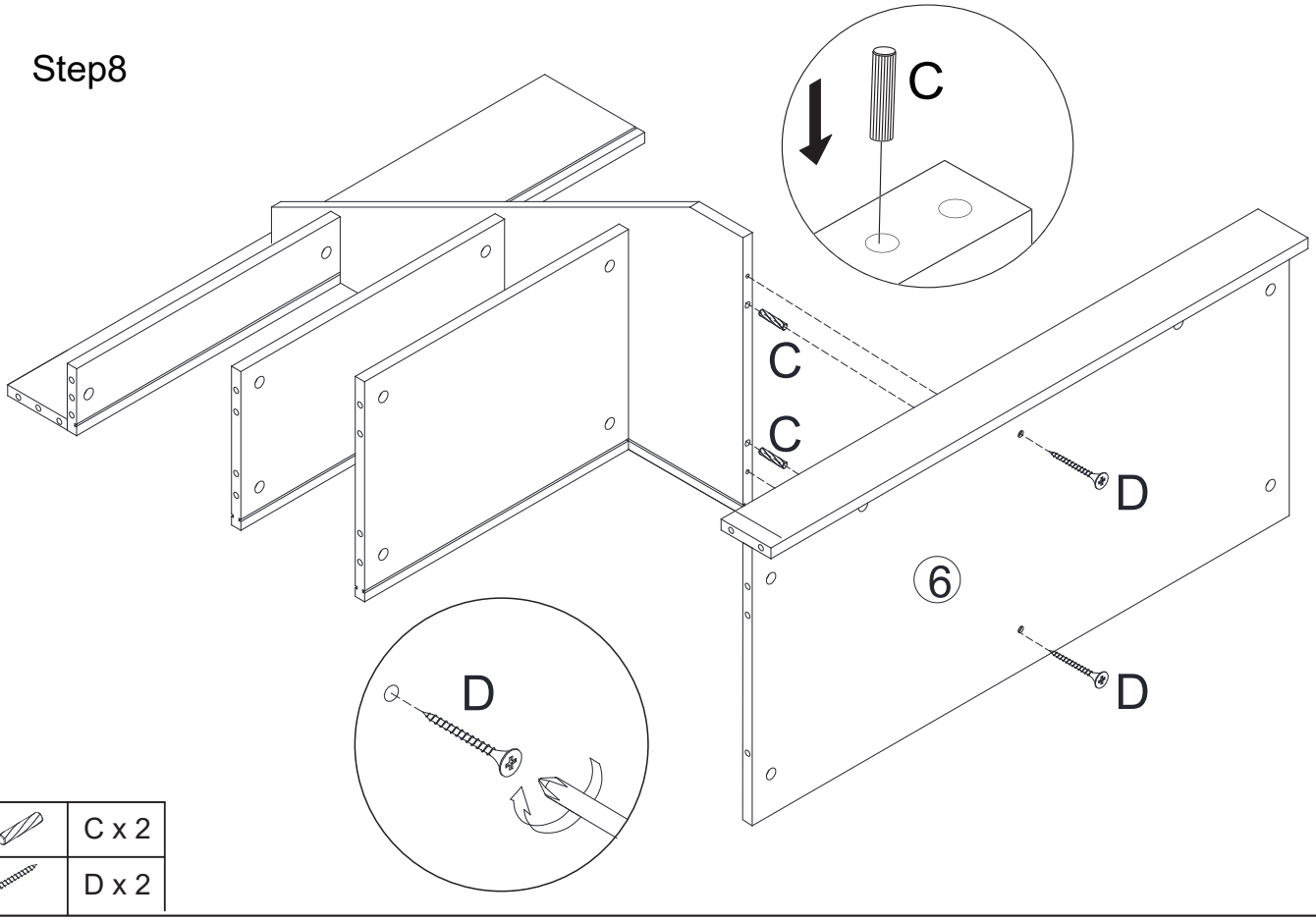

	C x 2
	D x 2

Step9

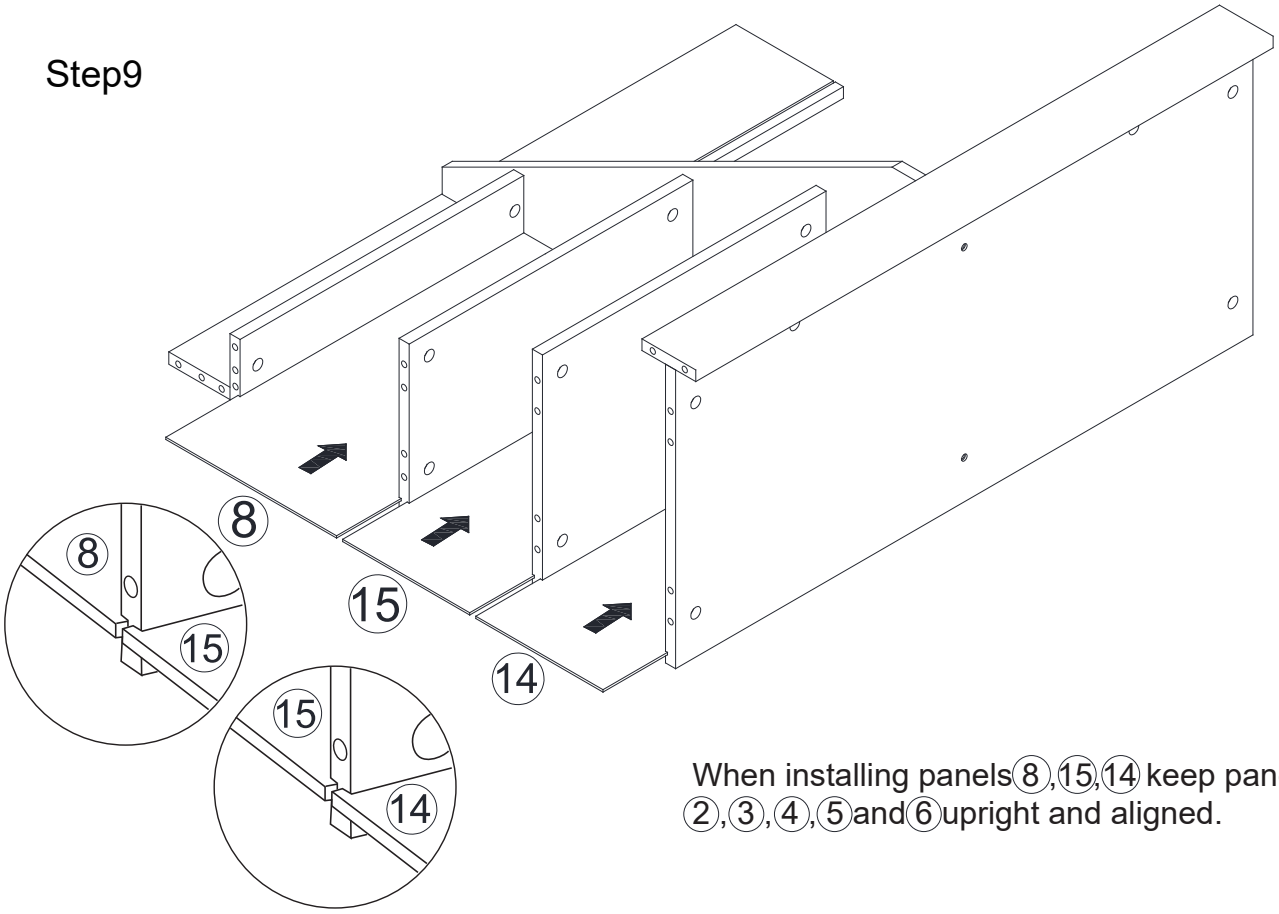

When installing panels ⑧,⑮,⑭ keep panels ②,③,④,⑤ and ⑥ upright and aligned.

Step10

INSERTING AND TIGHTENING CAM-BOLT

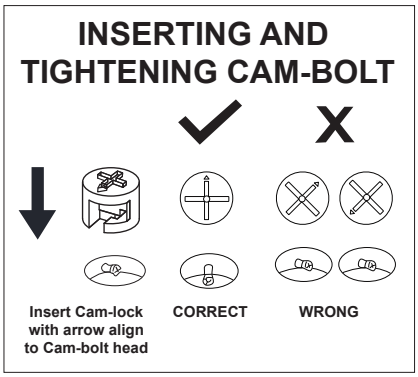

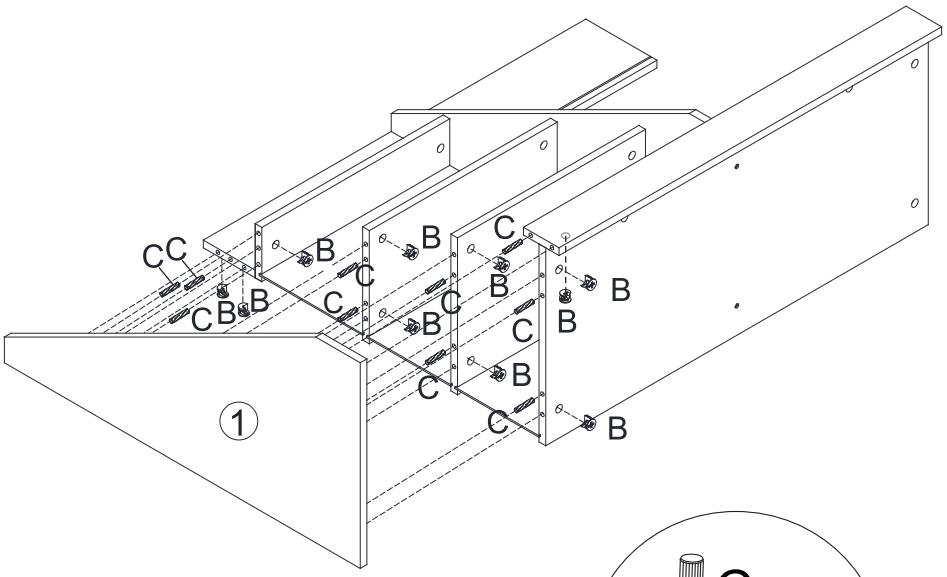

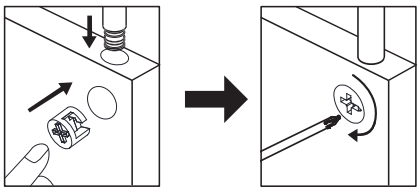

For details, see Page3.

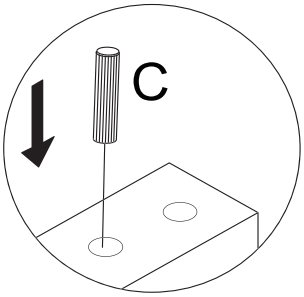

	B x 10
	C x 10

Step11

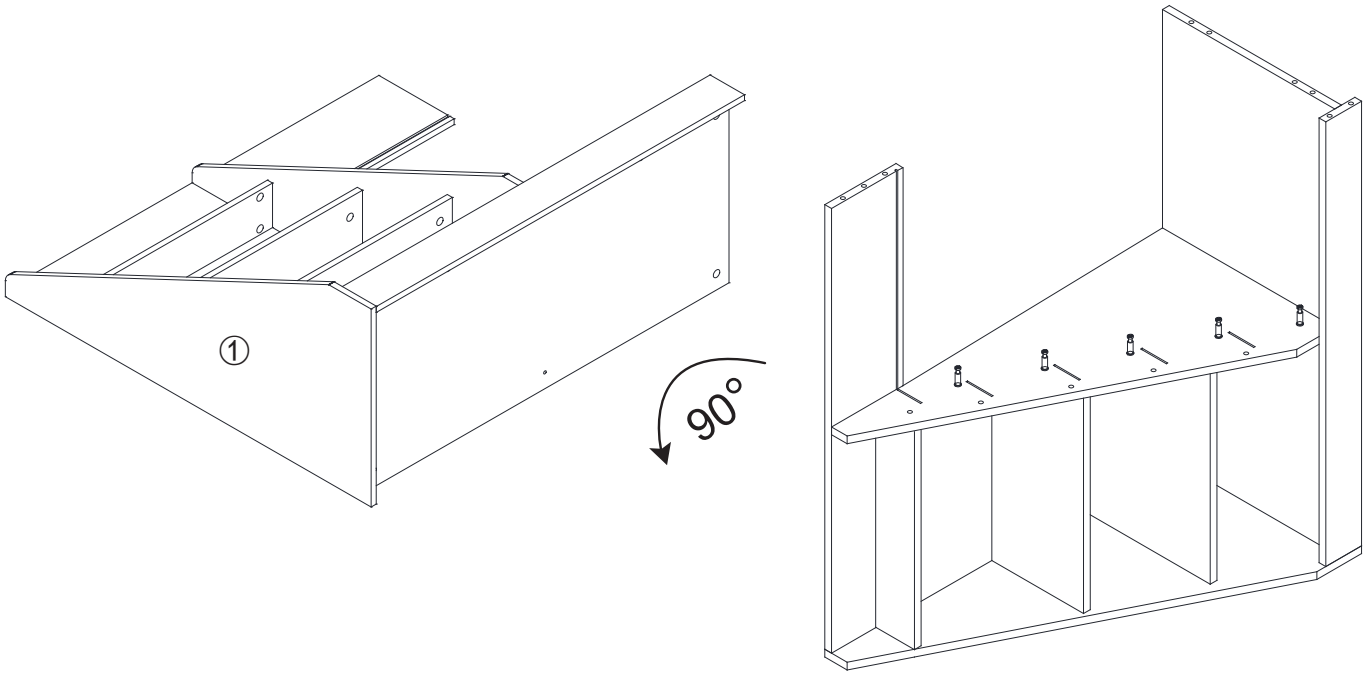

Before rotating, place panel①on foam or a carpet to protect it.

Step12

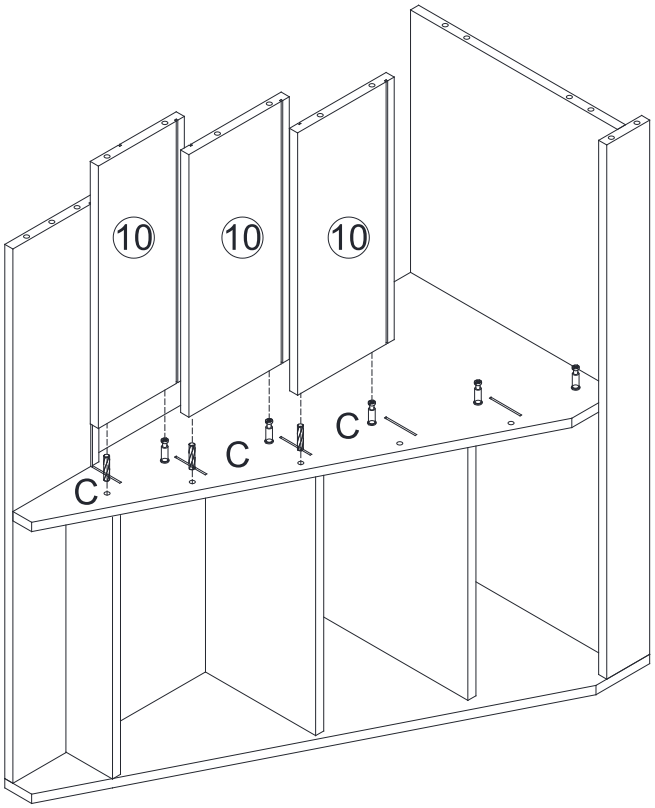

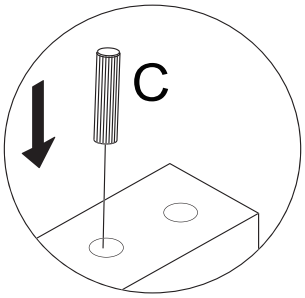

Face hardware B holes to the back and keep all panel grooves in this step perpendicular to the groove on panel⑨.

	C x 3

Step13

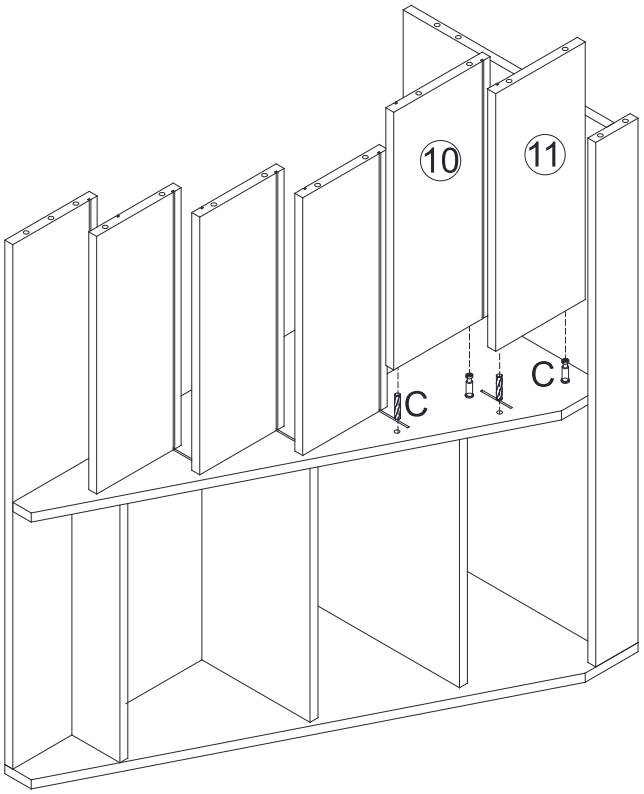

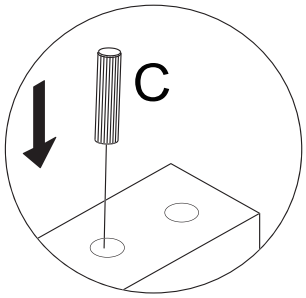

Face hardware B holes to the back and keep all panel grooves in this step perpendicular to the groove on panel⑨.

	C x 2

Step14

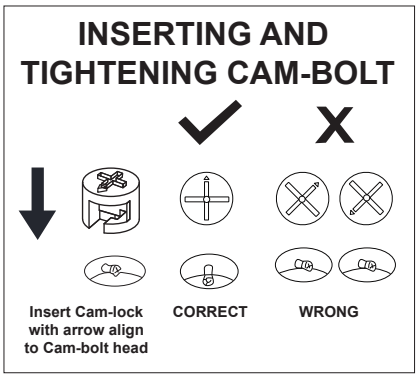

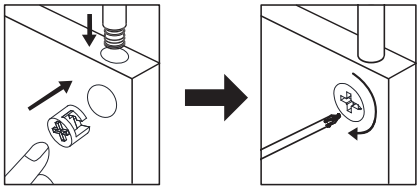

For details, see Page3.

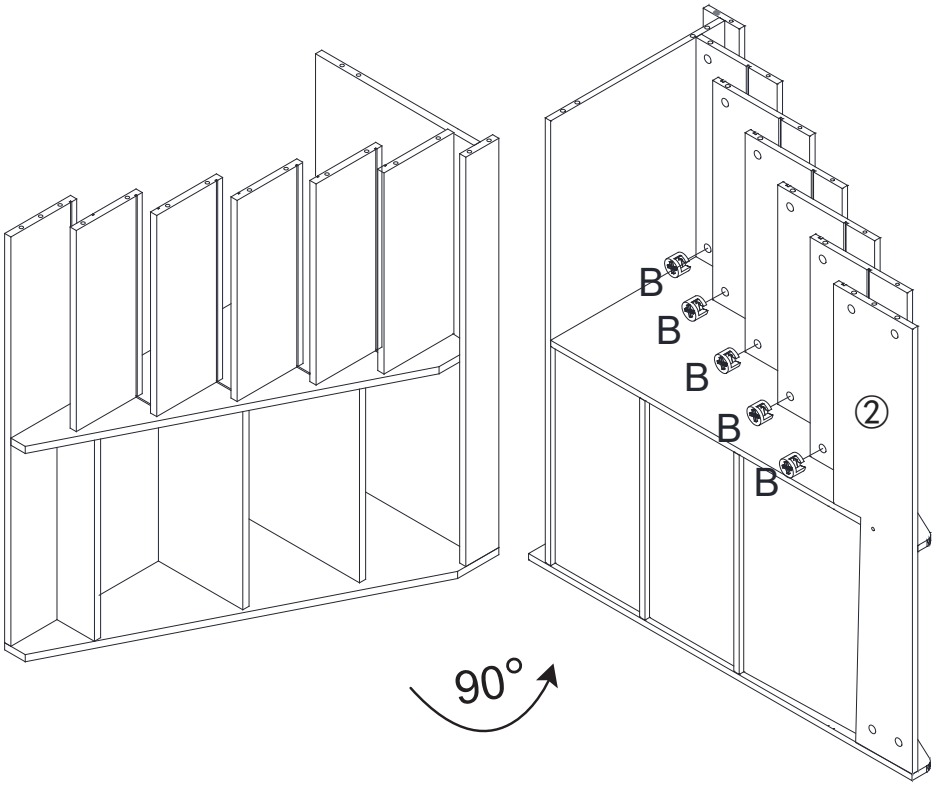

	B x 10

Step15

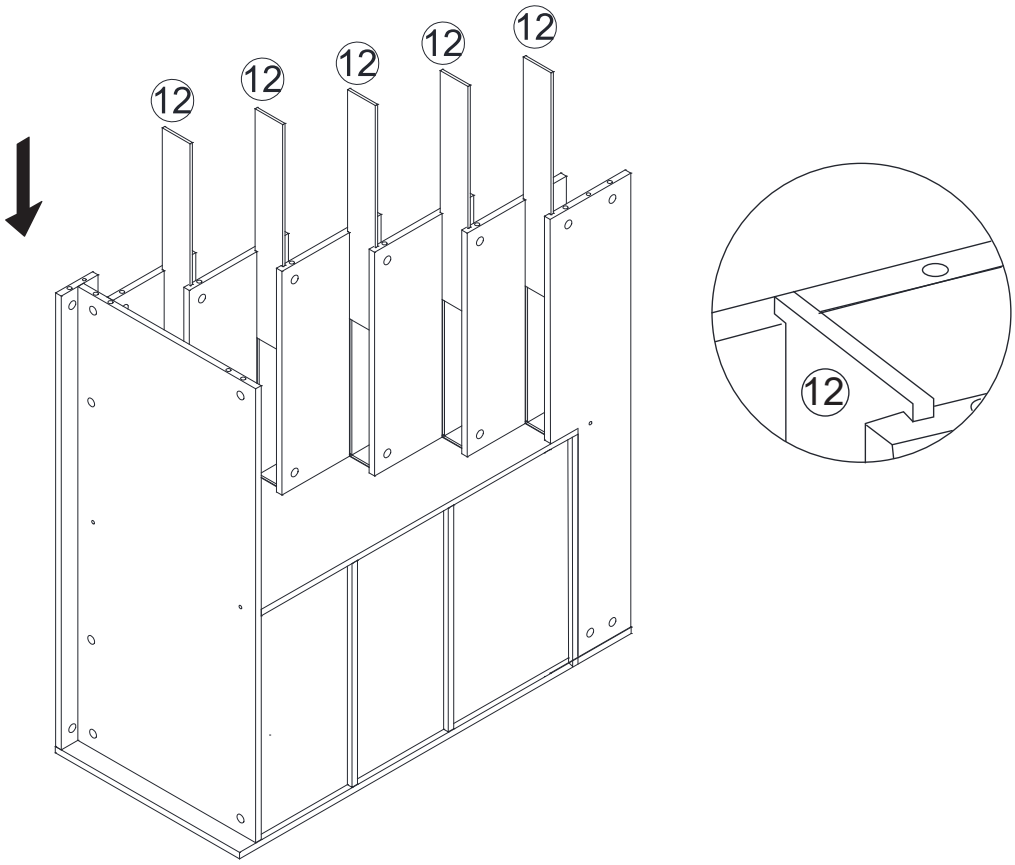

Step16

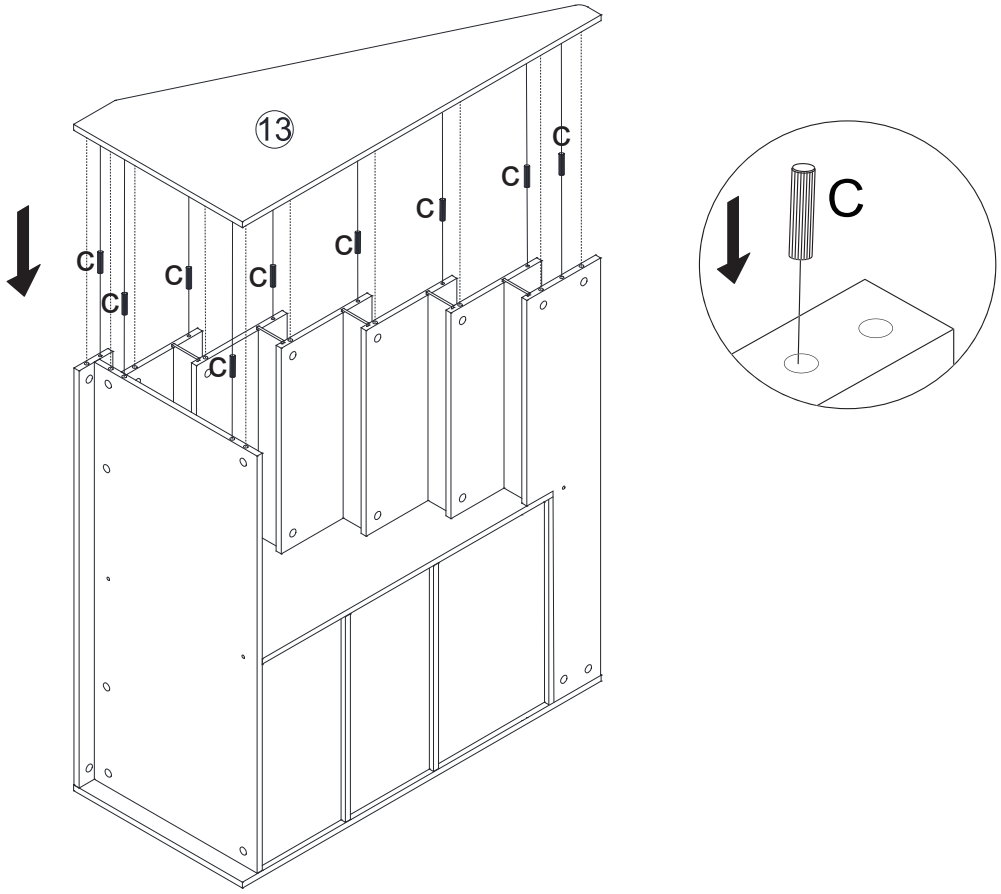

	C x 10

Step17

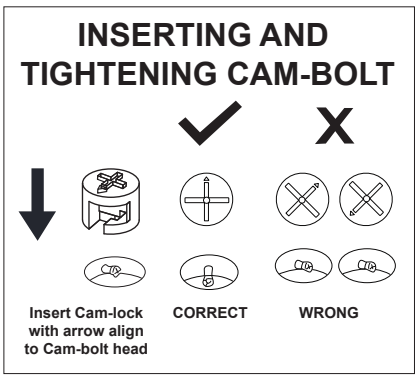

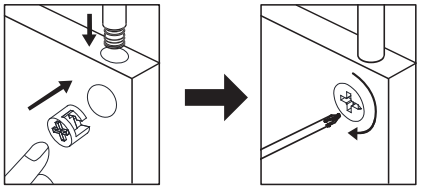

For details,
see Page3.

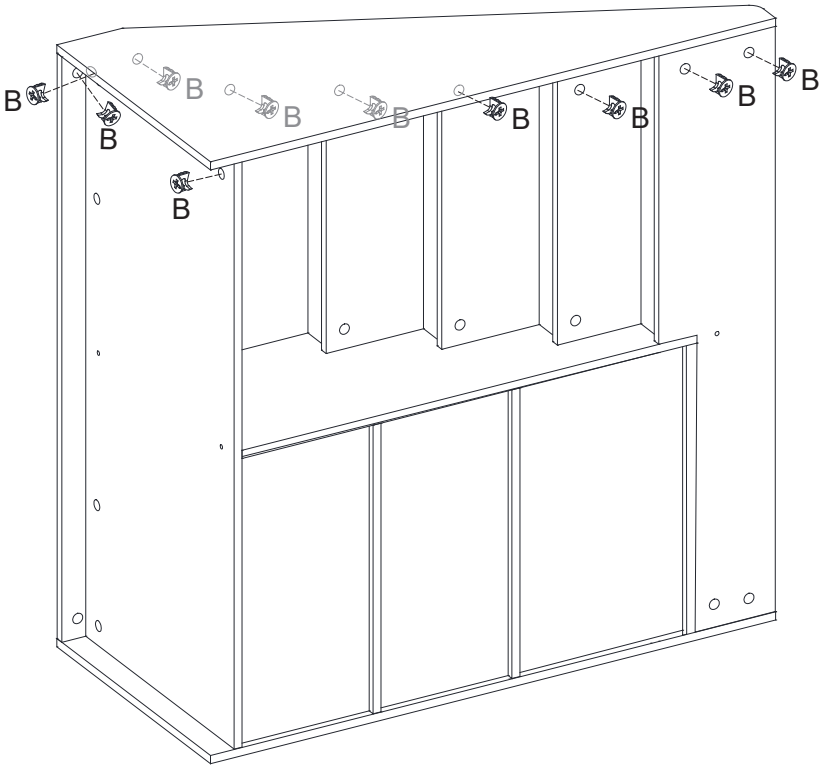

	B x 10

Step18

