VALLEY
AFFORDABLE LUXURY

pOVOAFR7230SK

ABOVE FLOOR ROUGH-IN SKIRTED BATHTUB

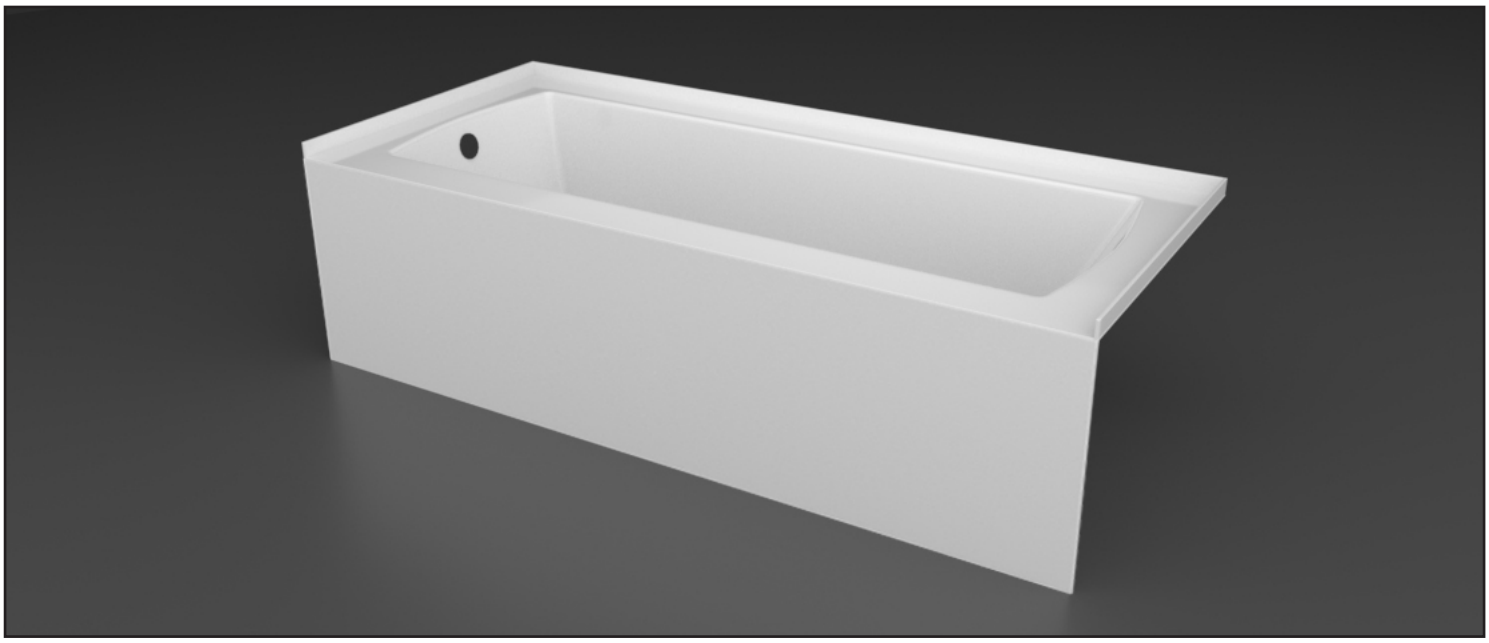

Valley's AFR skirted bathtubs have an extended apron for above floor rough-in and are only available for plain skirted baths. The pOVO skirted bathtub has a spacious well design with a sloped backrest for complete comfort. The plain skirt gives this tub a modern and contemporary flair.

DESCRIPTION:

- Modern style.
- Plain skirt.
- Above Floor Rough-in
- End drain.
- High gloss / Crack-resistant acrylic.
- Made in Canada.
- Complies with CSA & IAPMO standards.

MEASUREMENTS:

- **Length:** 71.75" / 1822mm
- **Width:** 30" / 762mm
- **Skirt Height:** 22" / 559mm

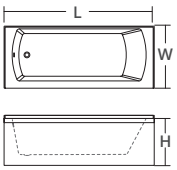

WATER DEPTH	CAPACITY
13.5" / 343mm Drain to overflow	61.8 gal. 234 litres of water

AVAILABLE COLOURS:

White -WHT- | Black -BLK- | Biscuit -BIS-

CONFIGURATIONS:

- Textured Bottom.
- 3/4" Set back wood apron.
- Skirt cut-off.
- Double tilling flange.

JETTING OPTIONS

- LATERAL AIR JETS
- AIR ILLUSION JETS
- SANTÉ AIR
- SQUARE ZEN AIR JETS
- NECK-JET MASSAGE SYSTEM
- ROUND WHIRLPOOL JETS
- THIN LINE WHIRLPOOL JETS
- SQUARE WHIRLPOOL JETS
- V-MASSEUSE
- CHROMATHERAPY
- COMFORT WARM SYSTEM
- AROMATHERAPY

SHIPPING INFORMATION:

- **Length: 74" / 1880mm**
- **Width: 34" / 864mm**
- **Height: 26" / 660mm**
- **Net Weight: 46 kg / 101 lbs**
- **Gross Weight: 50 kg / 110 lbs**

c LC us Complies With :
CSA B24S1 (2004)
CSA B45.5 (2002)
ANSI Z124.1.2 (2005)

website: www.valleyacrylic.com • **E-mail:** purchasing@valleyacrylic.com • **customer service call** Toll Free: 1.877.398.8827 • **Fax:** +1.604.820.0124

VALLEY
AFFORDABLE LUXURY

pOVOAFR7230SK

ABOVE FLOOR ROUGH-IN SKIRTED BATHTUB

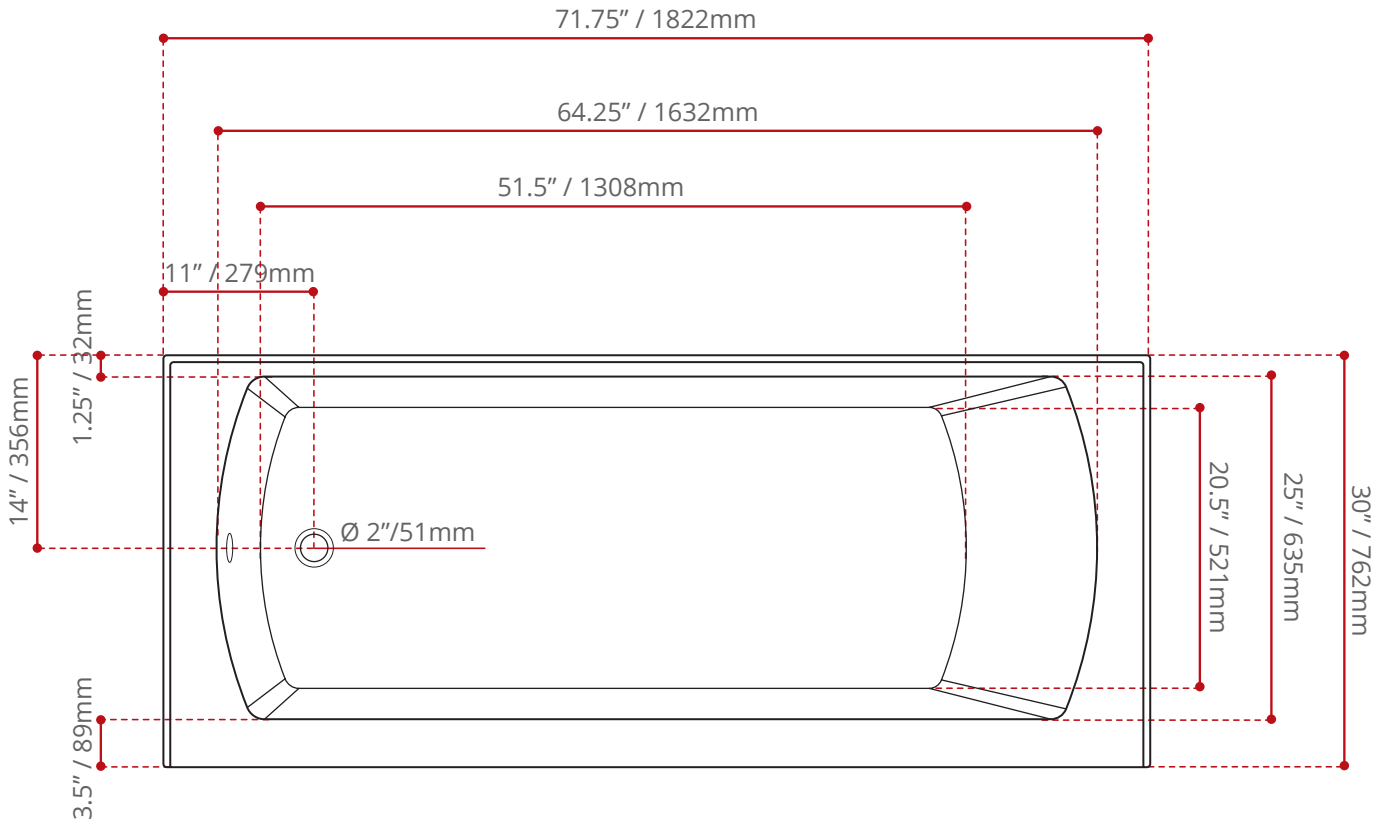

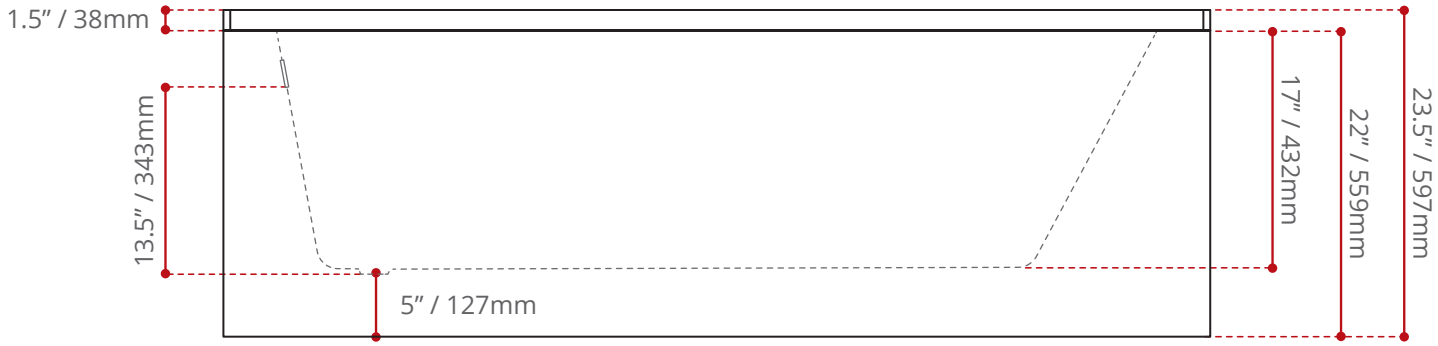

DISCLAIMER:

Measurements may vary ± ¼"
(Diagram Not to scale)

Complies With :
CSA B24S1 (2004)
CSA B45.5 (2002)
ANSI Z124.1.2 (2005)

website: www.valleyacrylic.com • **E-mail:** purchasing@valleyacrylic.com • **customer service call** Toll Free: 1.877.398.8827 • **Fax:** +1.604.820.0124