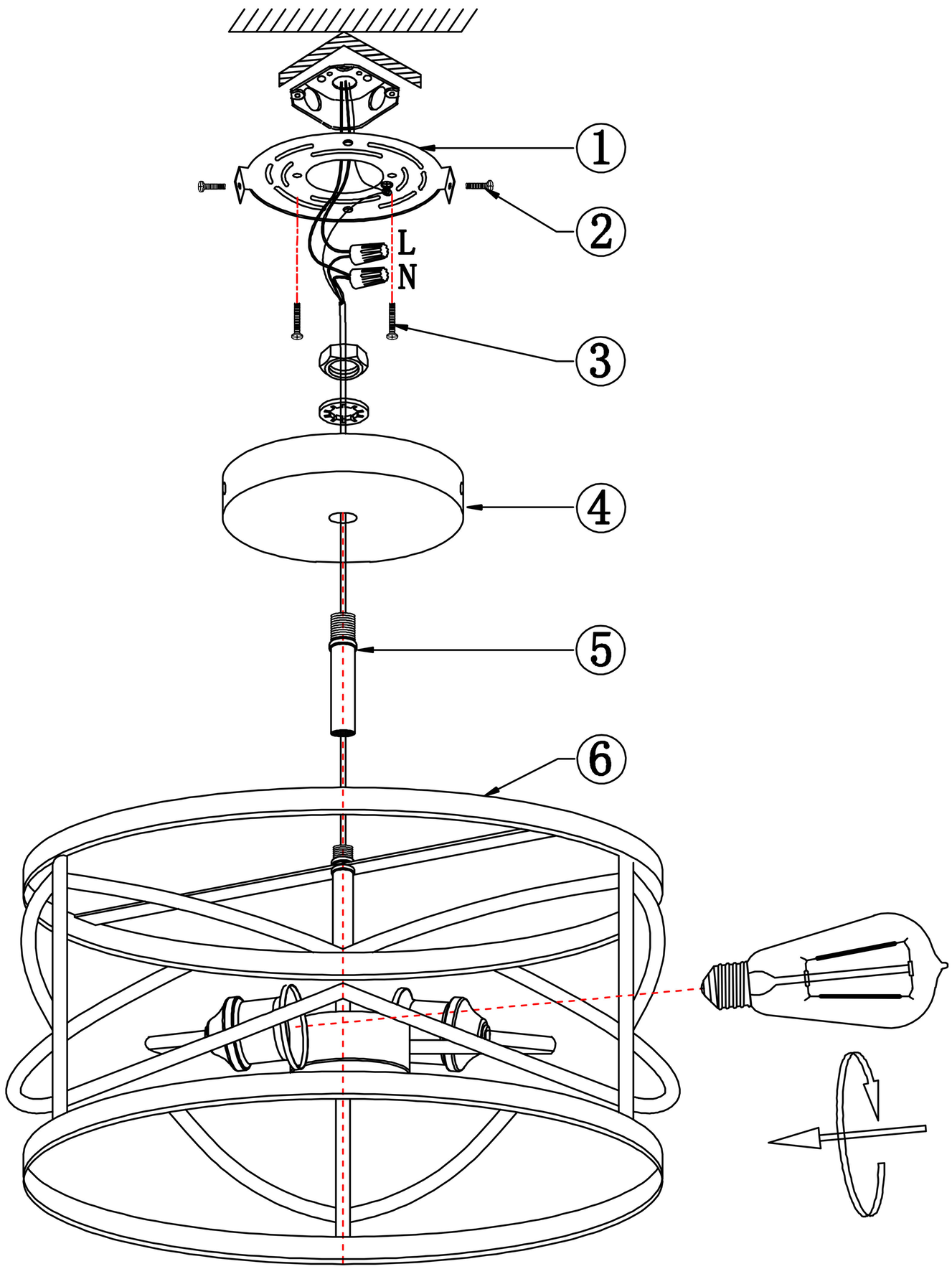

Installation Steps:

Step 1: Fix the connecting rod (5) on the main body (6).
Step 2: Fix the canopy (4) on the connecting rod (5) with the nut and gasket on the connecting rod (5).
Step 3: Fix the mounting plate (1) to the ceiling with screws (3).
Step 4: Use the green screws on the mounting plate (1) to lock the ground wire to the mounting plate (1).
Step 5: Connect the positive "L"' negative "N" poles of the main line and power cable separately with the P3 wiring cap in the fittings (7).
Step 6: Fix the canopy (4) to the mounting plate (1) with screws (2).
Step 7: Install light bulb (without light bulb).

Accessories:

1: Mounting Plate*1	
2: Screws*2	
3: Screws*3	
4: Canopy*1	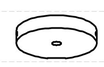
5: Rod*1	
6: Lamp Body*1	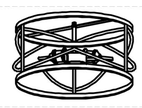
7: Fittings*1	

Notice: This light fixture should be installed in accordance with all applicable, local installation codes, and by a person familiar with the construction and operation of it, as well as the hazards involved. Inspect items and contents carefully. If any damage or defect is found, do not install it.