Product Installation Instructions

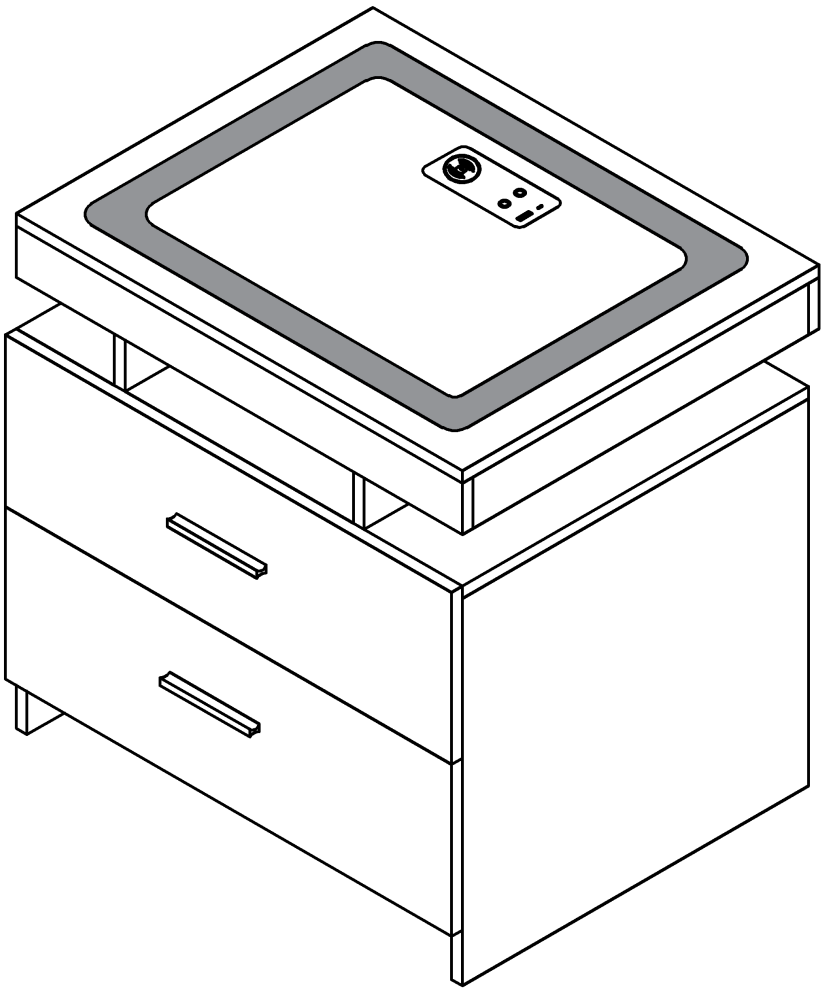

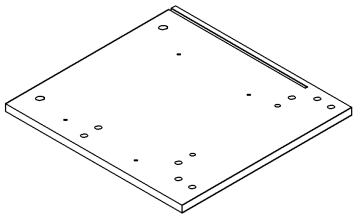

Ax1

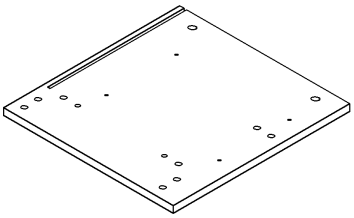

A2x1

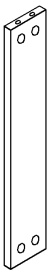

Bx1

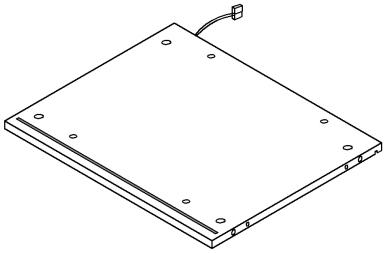

Cx1

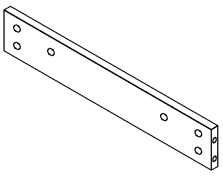

Dx2

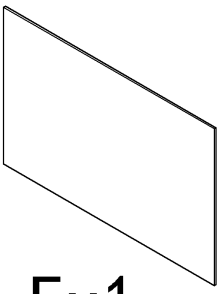

Ex1

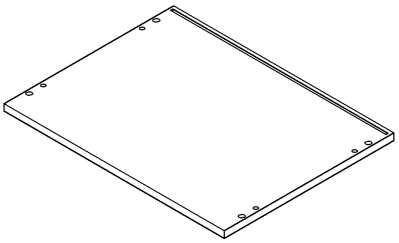

Fx1

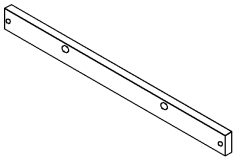

Gx2

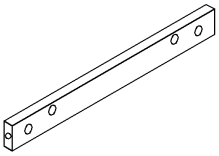

Hx2

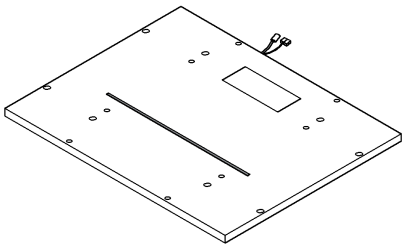

Ix1

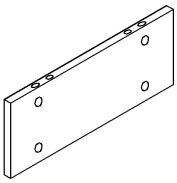

Jx2

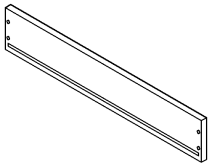

Kx2

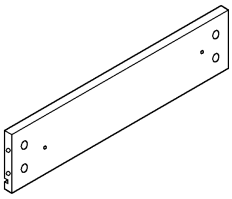

Lx4

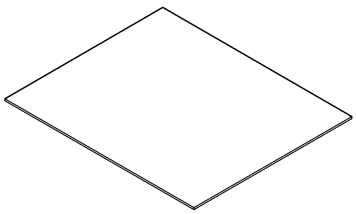

Mx2

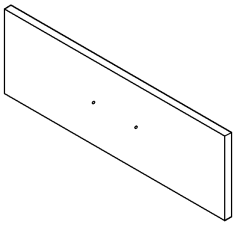

Nx2

1

1		Two In One Screw (6x28mm)	60pcs +4pcs
2		Two In One Nut (10x12mm)	60pcs +4pcs
3		Wood Chipping (6x30mm)	16pcs +2pcs
4		Screw & Guide (3x12mm)	20pcs +4pcs / 4pcs
5		Screw & Handle (4x16mm)	4pcs +1pcs / 2pcs
6		Back Plate Buckle & Screw (3x16mm)	4pcs
		AC/DC Adapter (12V⎓3.0A)	1pcs

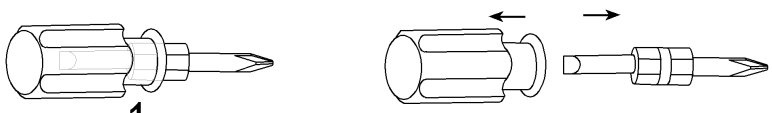

1pcs

Double-head screwdriver, use as required

2

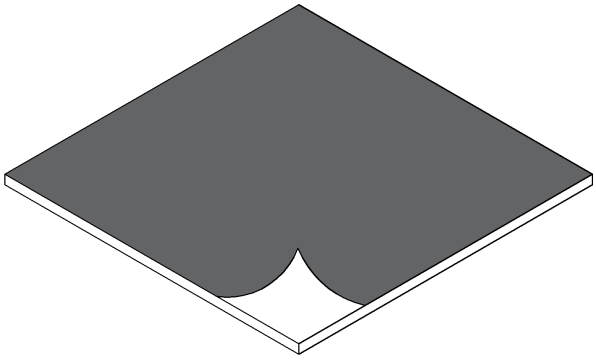

The plates used in this product are bright plates,

With a transparent protective film

The function of the protective film is prevent the product from

being scratched during transportation

Please remove the protective film before installing the product,

Avoid difficult removal of the protective film after installation

Product structure decomposition

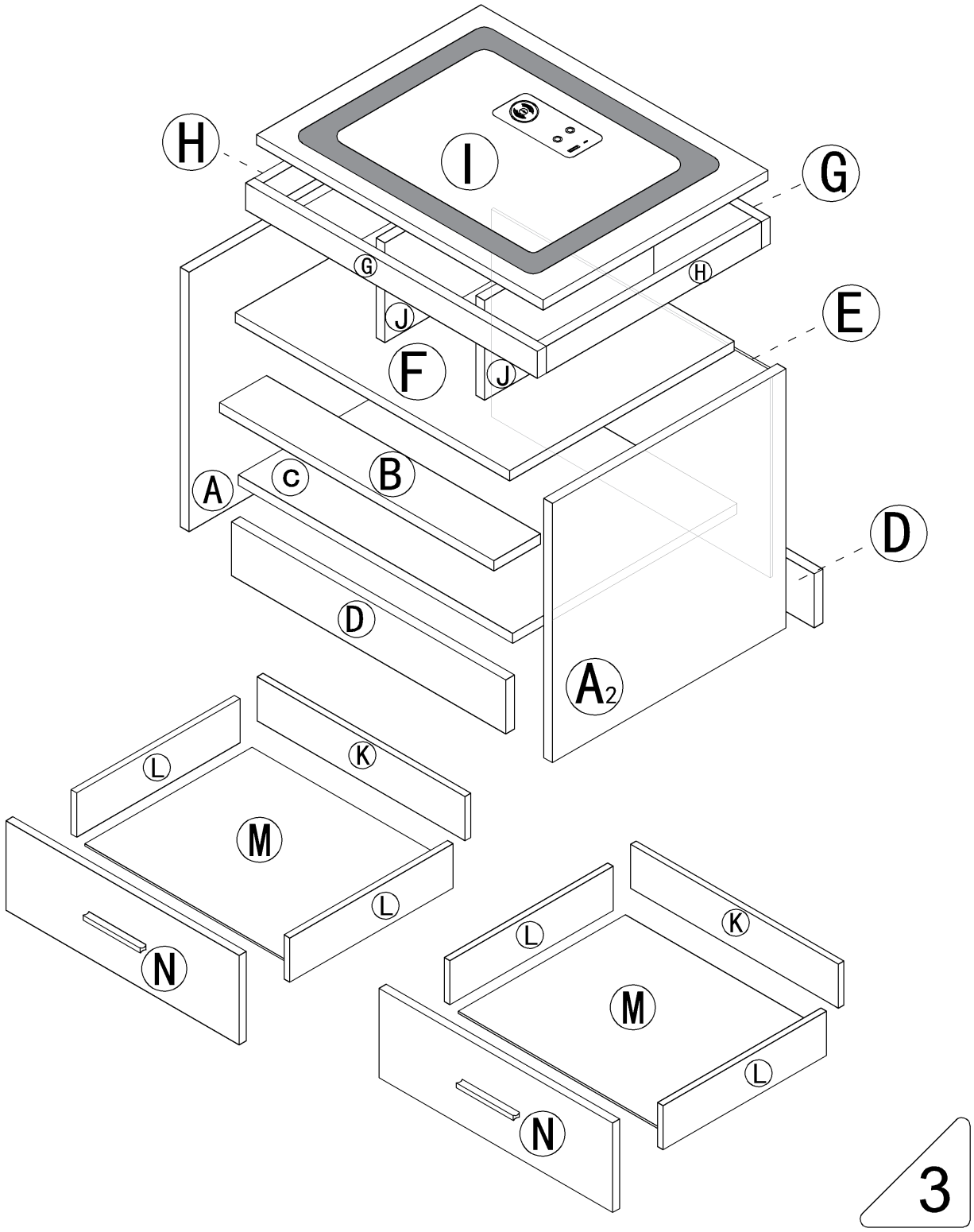

1	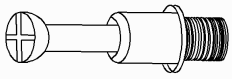	16pcs	4	8pcs 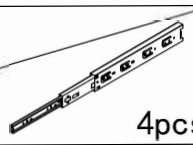 4pcs
2		16pcs	5	4pcs 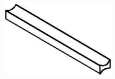 2pcs

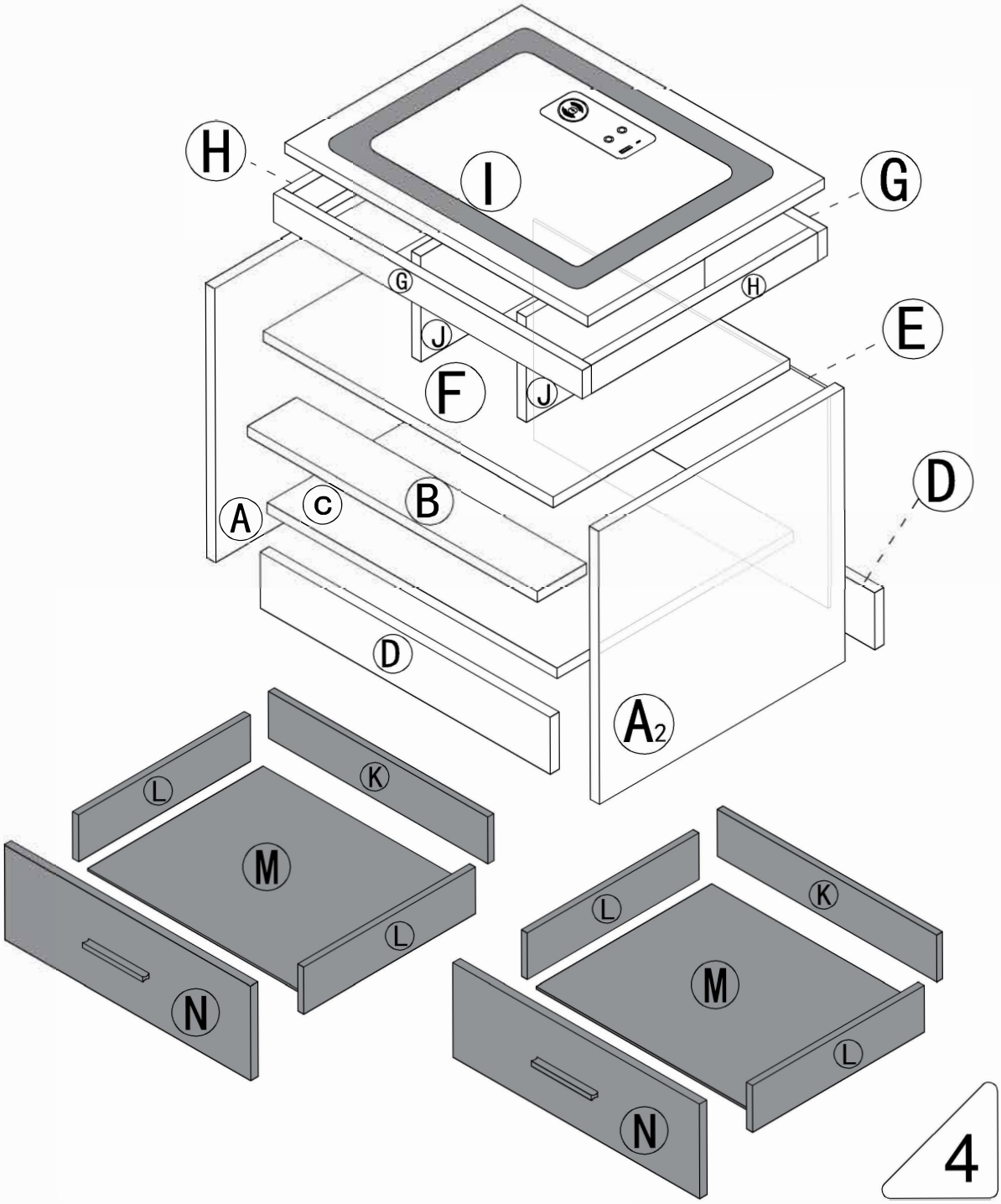

Use parts ① and ②

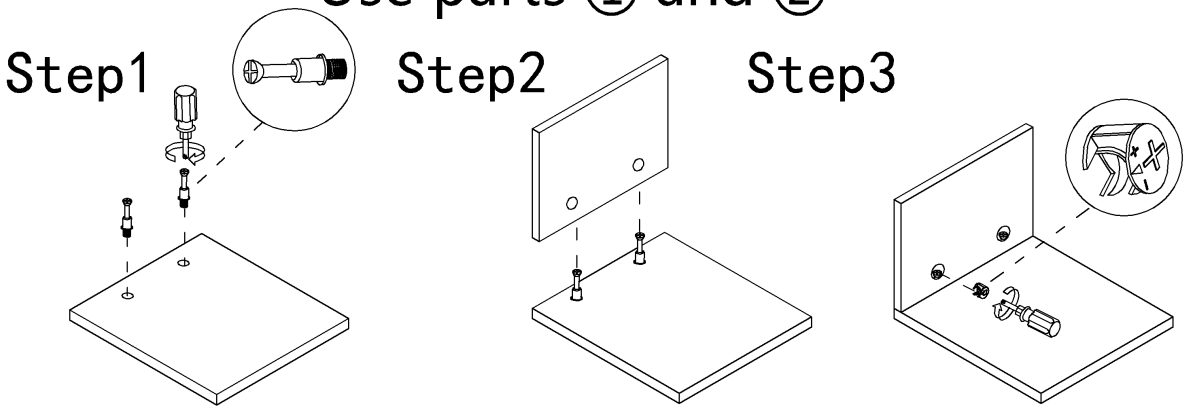

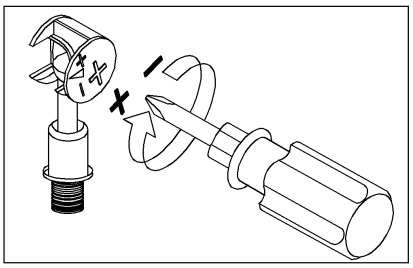

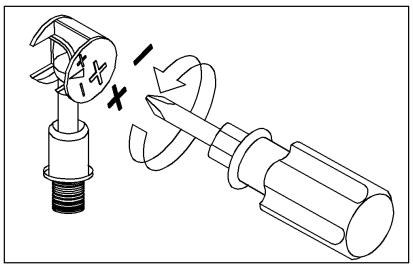

Use a screwdriver to lock in the direction of the "+" sign

Disassemble along the direction of "-" sign

Step 1

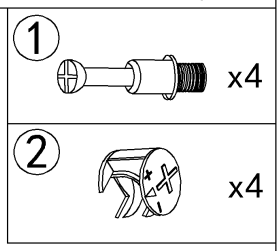

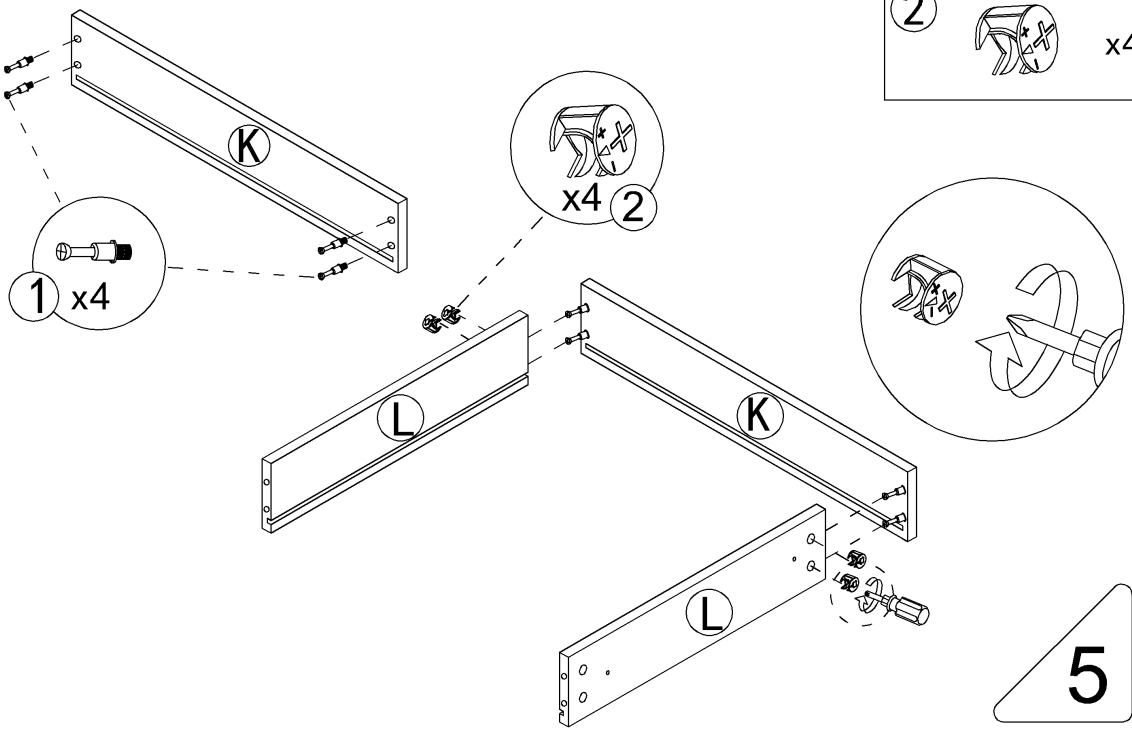

Step 2

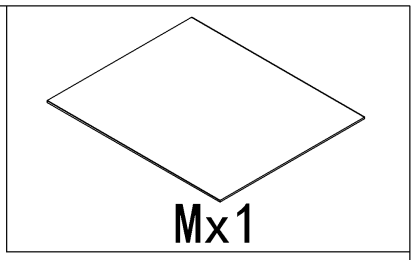

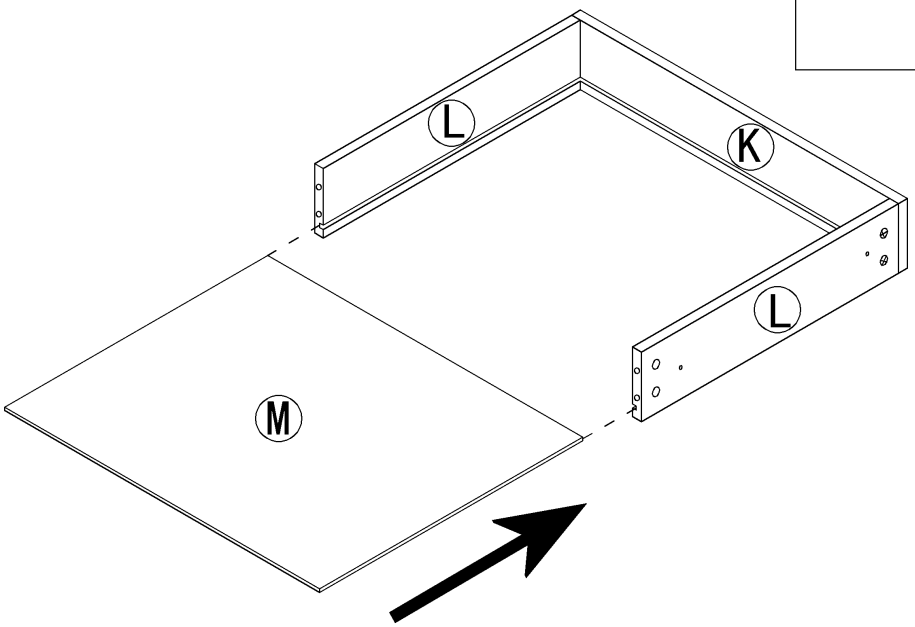

Step 3

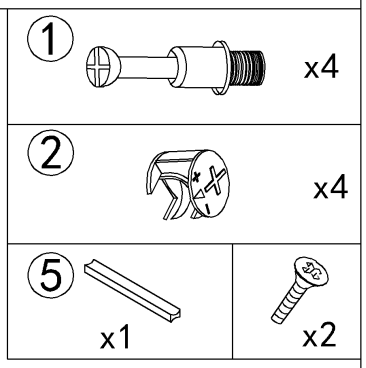

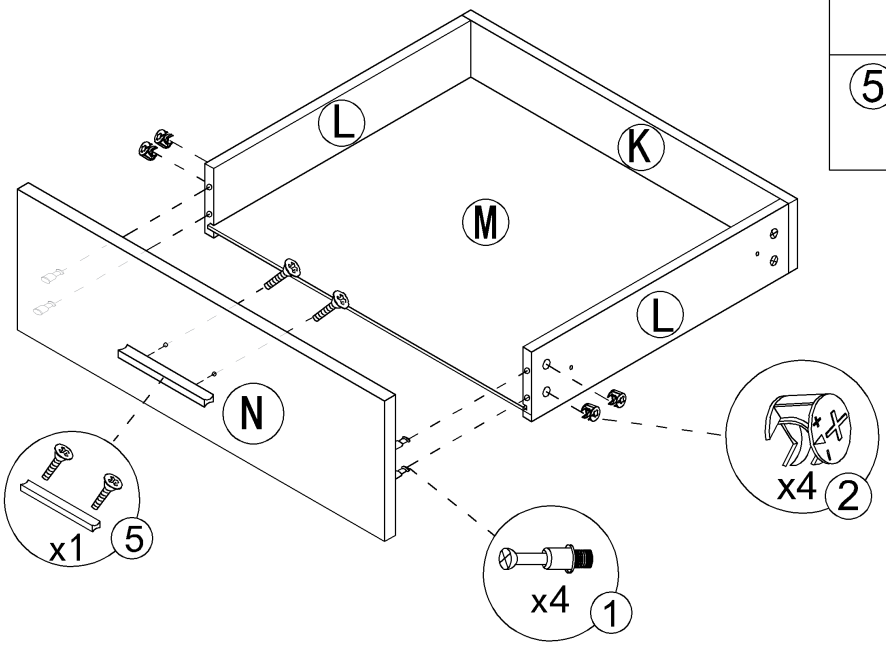

Drawer rail breakdown diagram

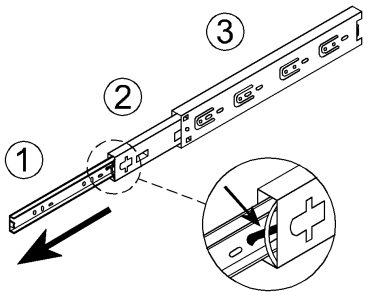

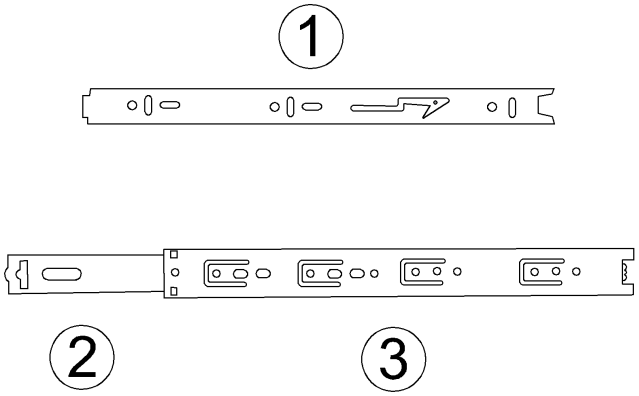

Step 1 : Pull the rails apart

Step 2 : Push the nylon buckle outward ①

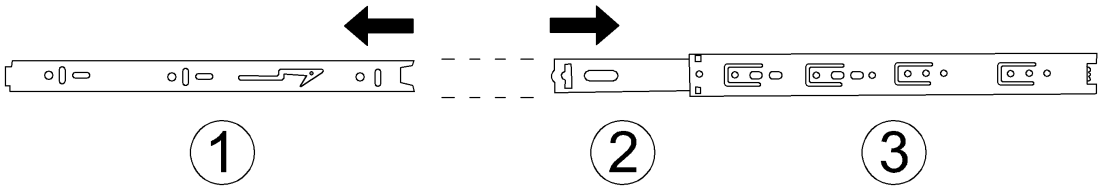

Step 4

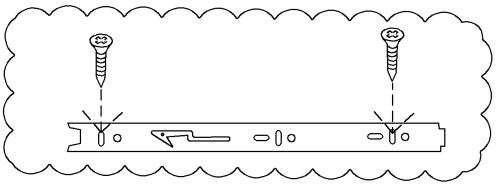

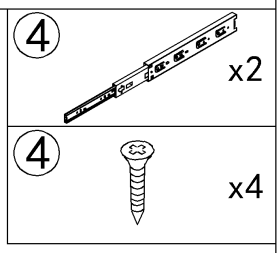

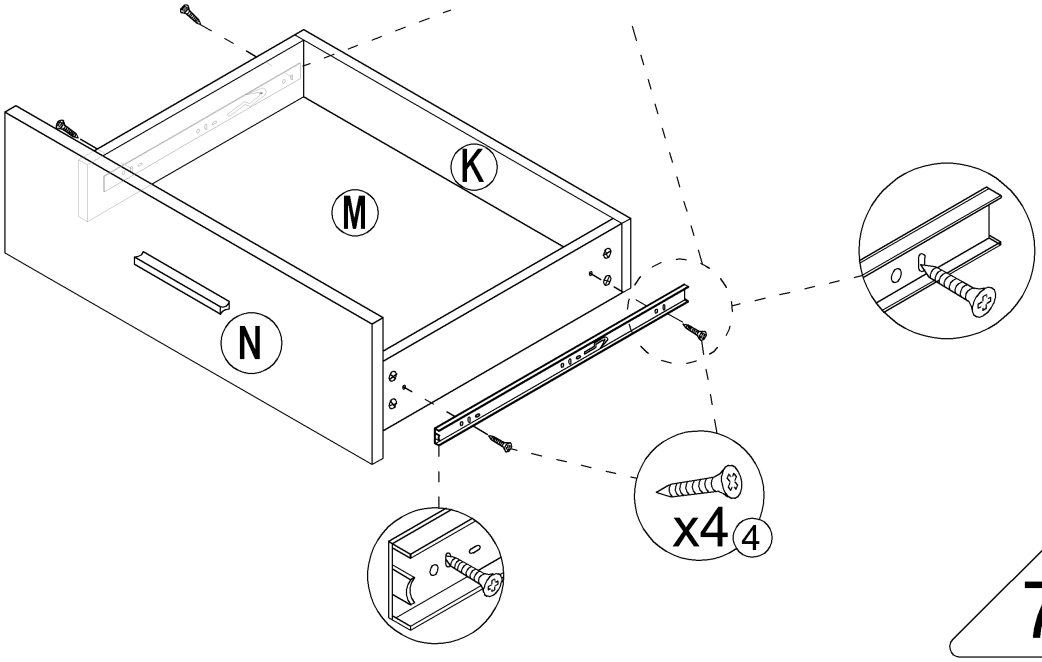

Step 5

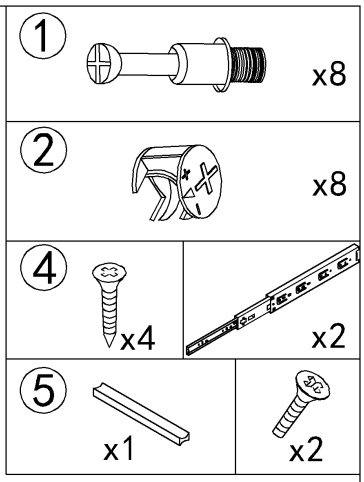

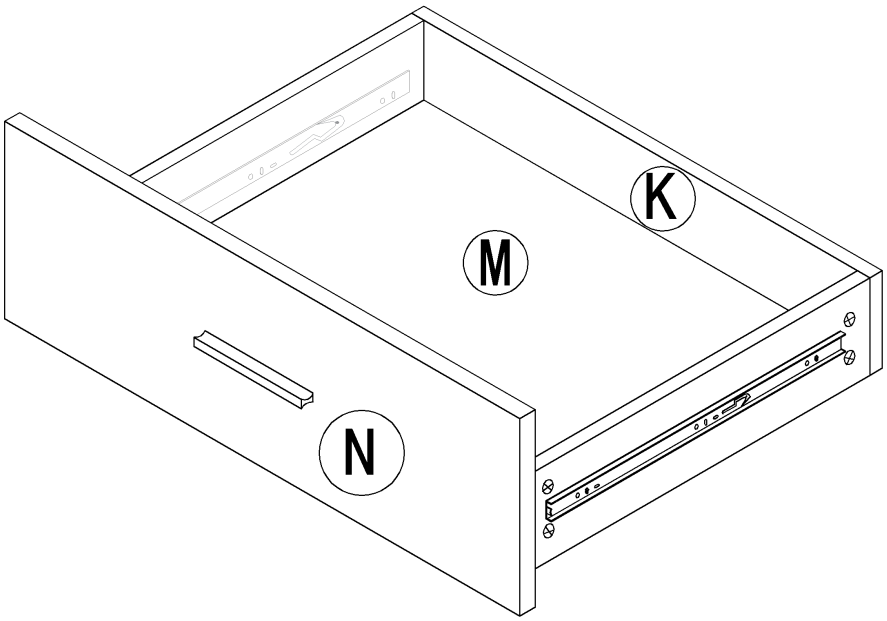

Use the same way to install another drawer

1	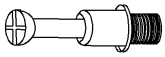	28pcs	3	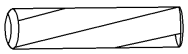	12pcs
2		24pcs	4		12pcs

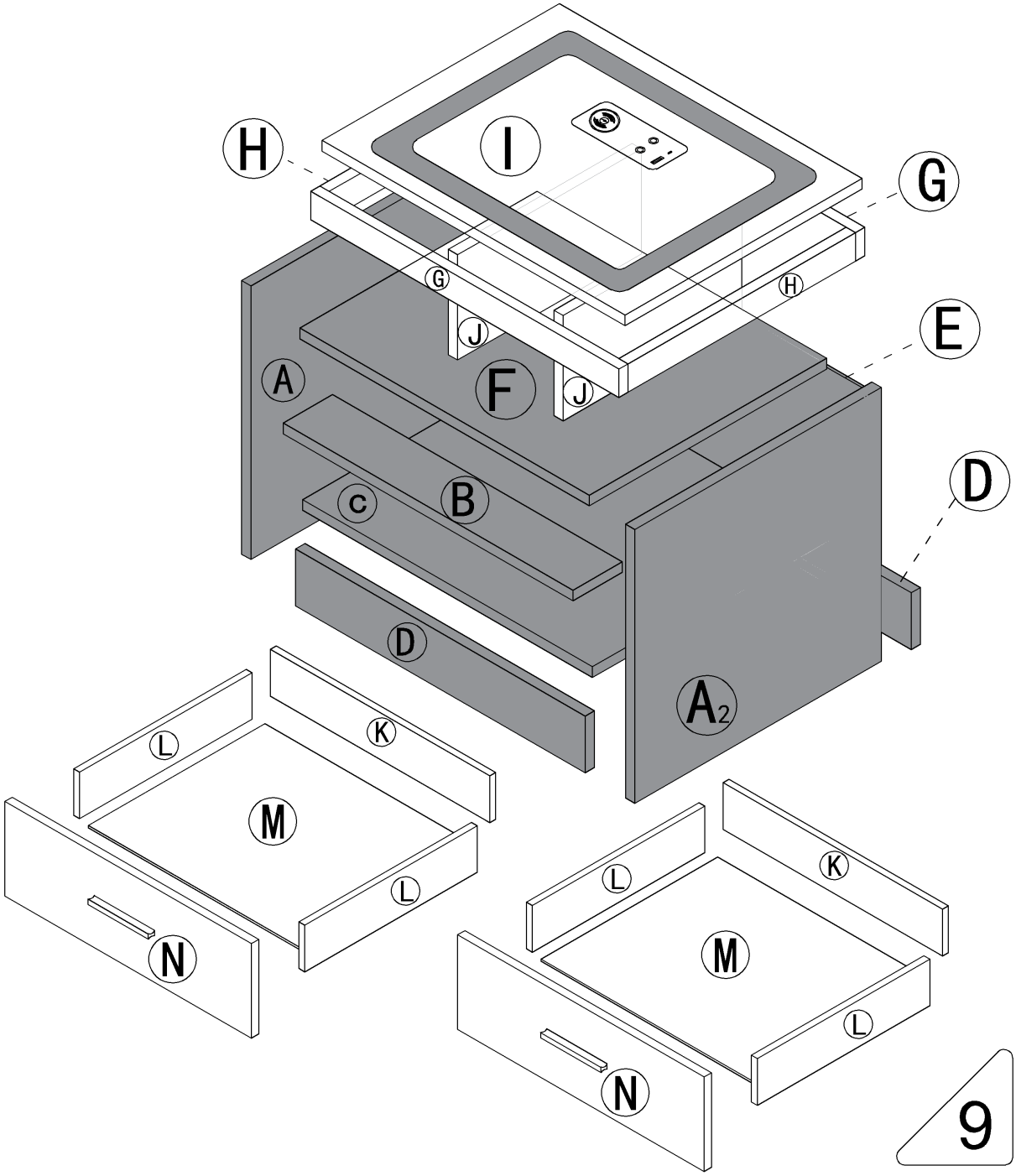

Step 6

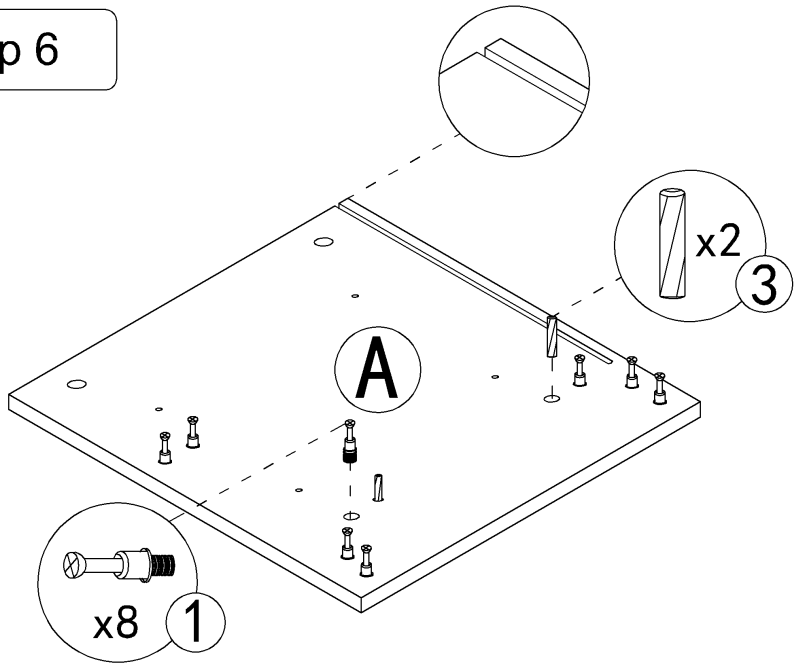

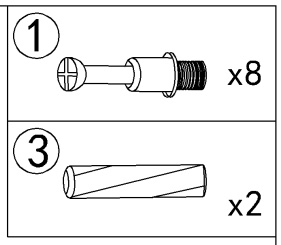

Step 7

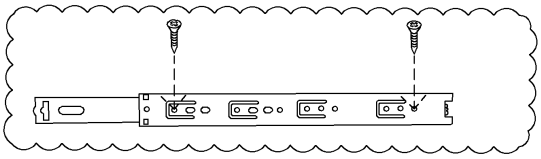

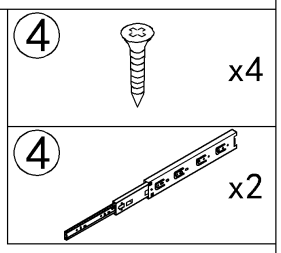

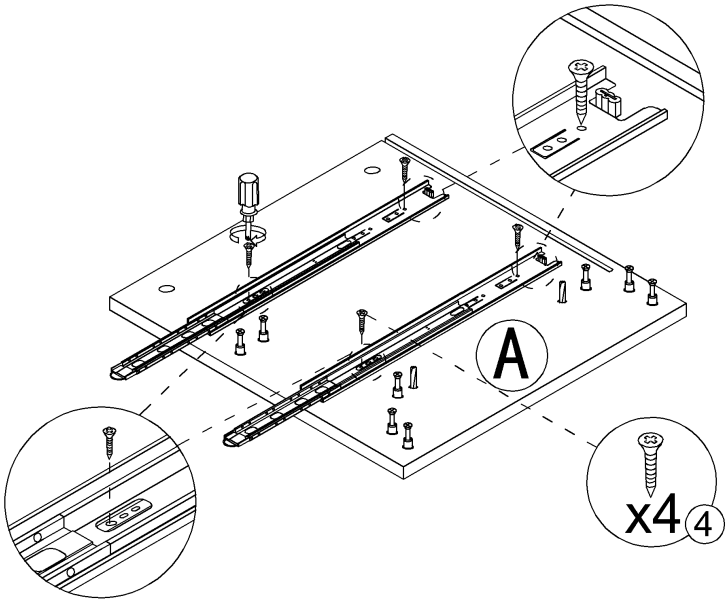

Step 8

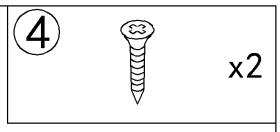

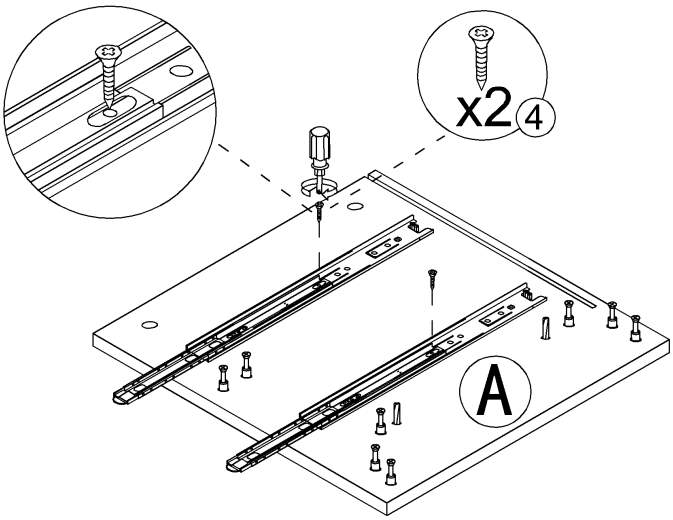

This hole is for strengthening fixed hole customers can choose to install according to their needs.

Step 9

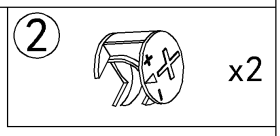

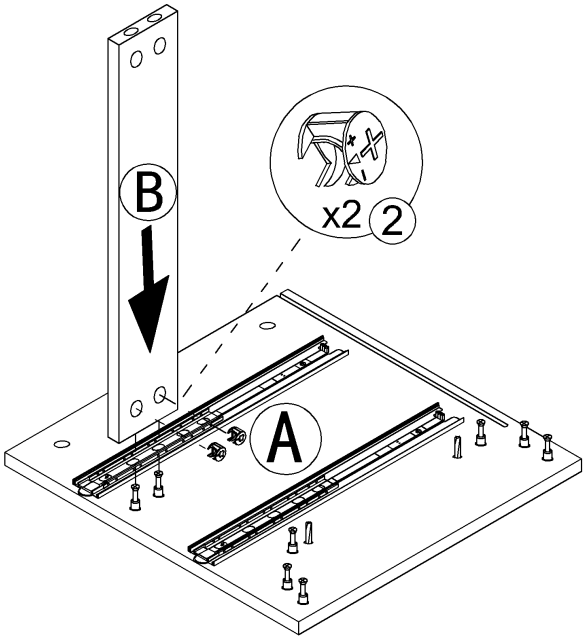

Step 10

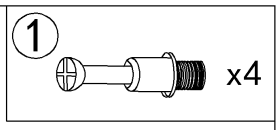

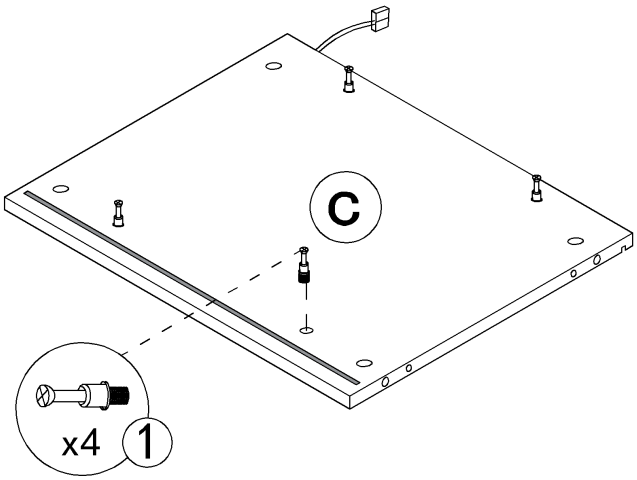

Step 11

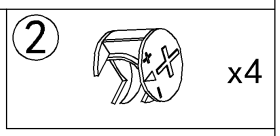

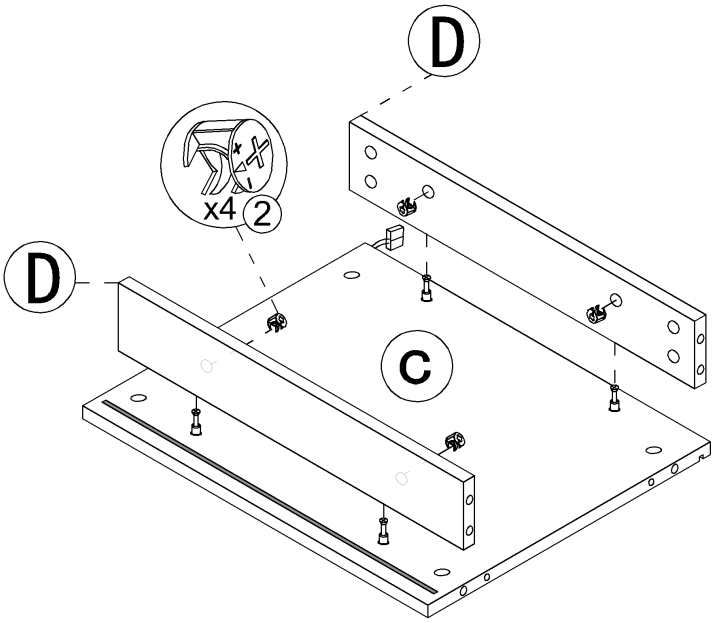

Step 12

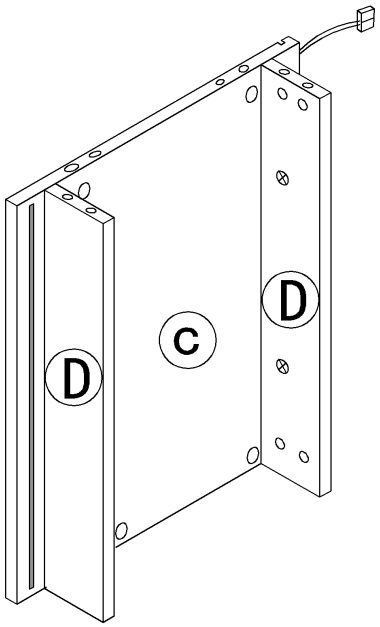

Step 13

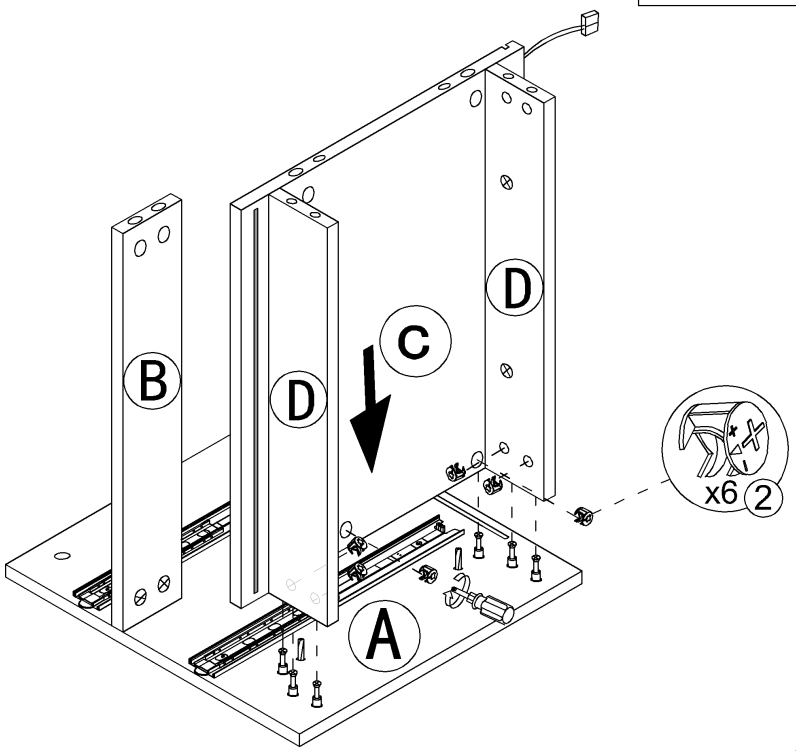

2 x6

Step 14

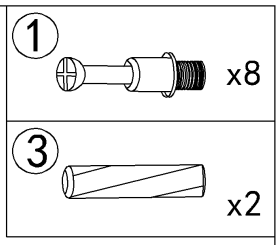

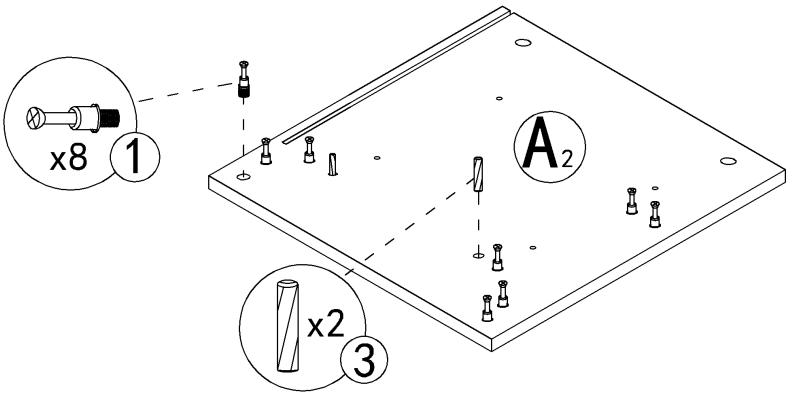

Step 15

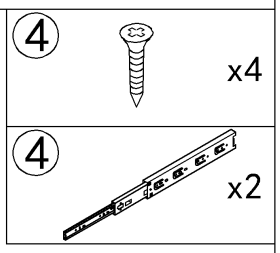

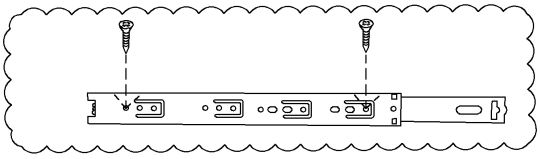

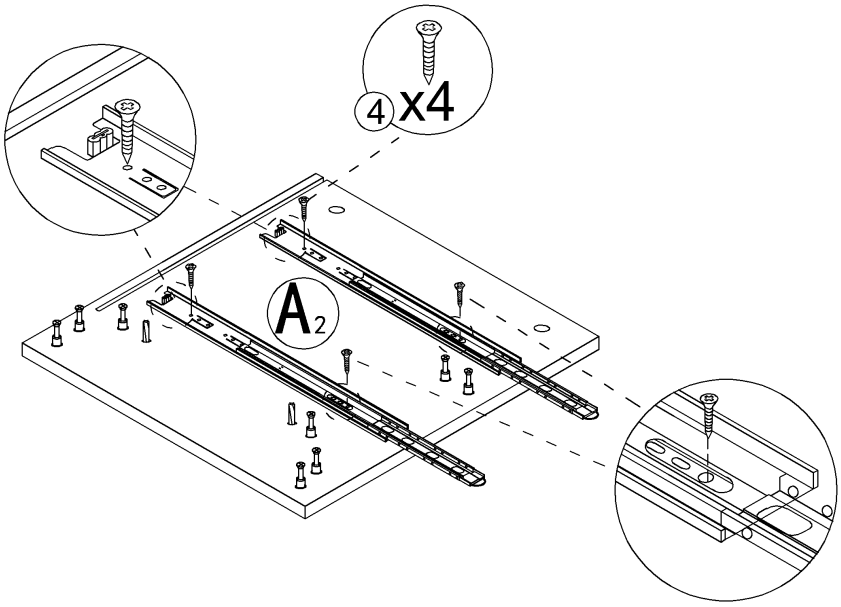

Step 16

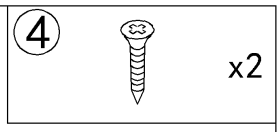

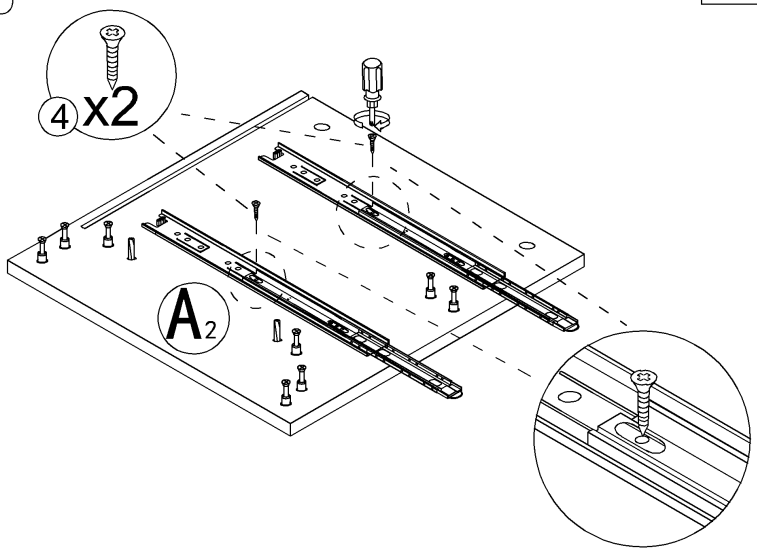

This hole is for strengthening fixed hole customers can choose to install according to their needs.

Step 17

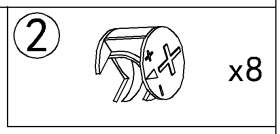

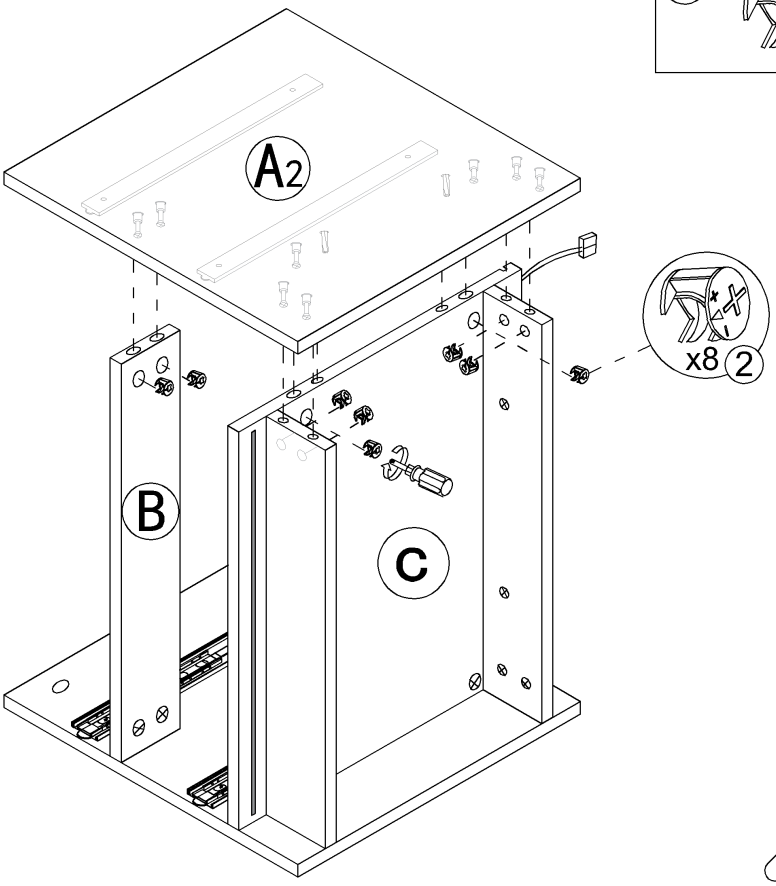

Step 18

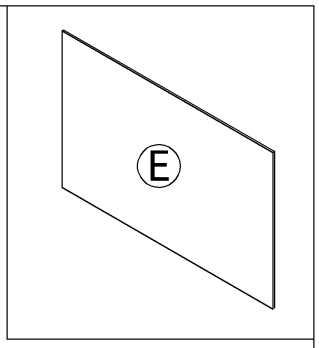

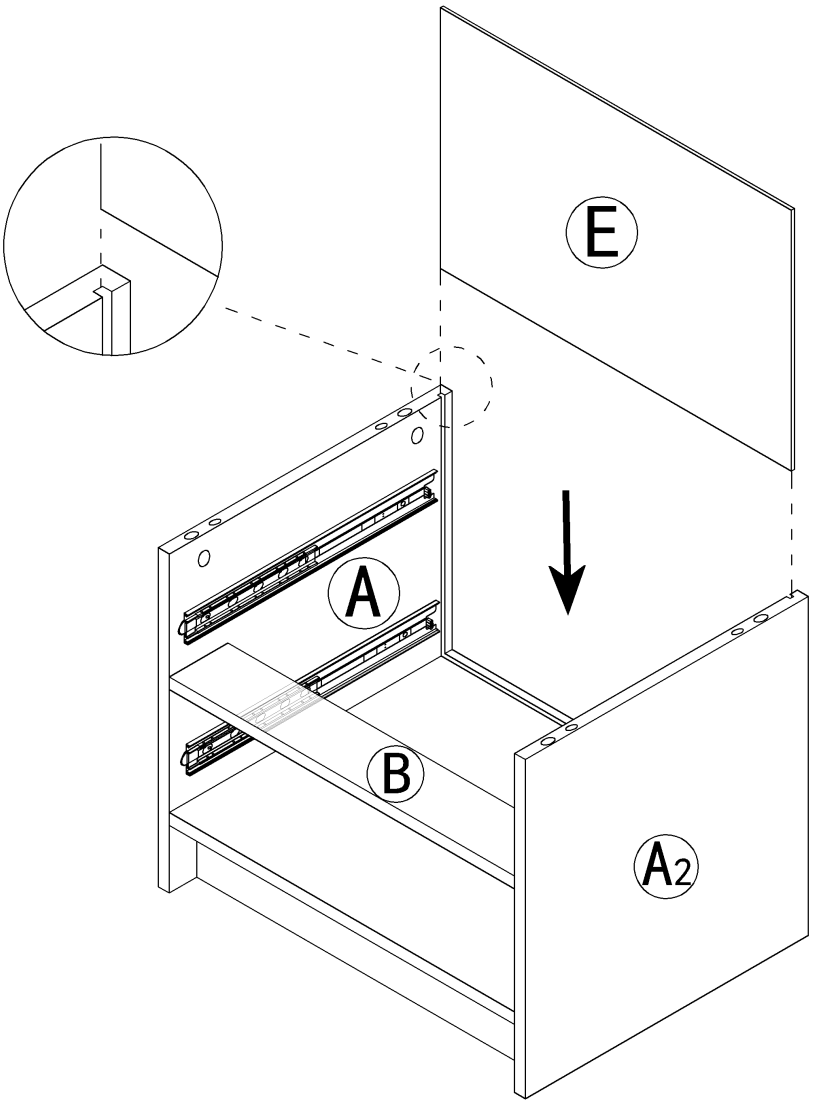

Step 19

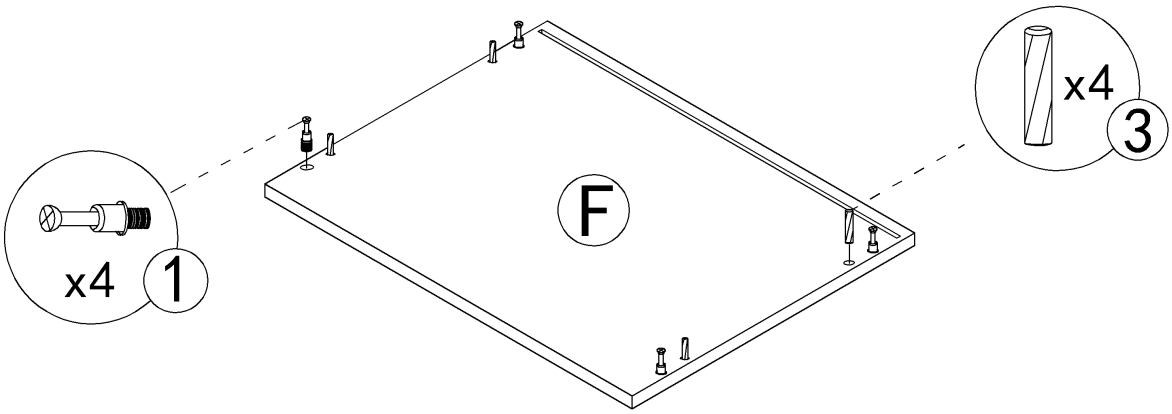

Step 20

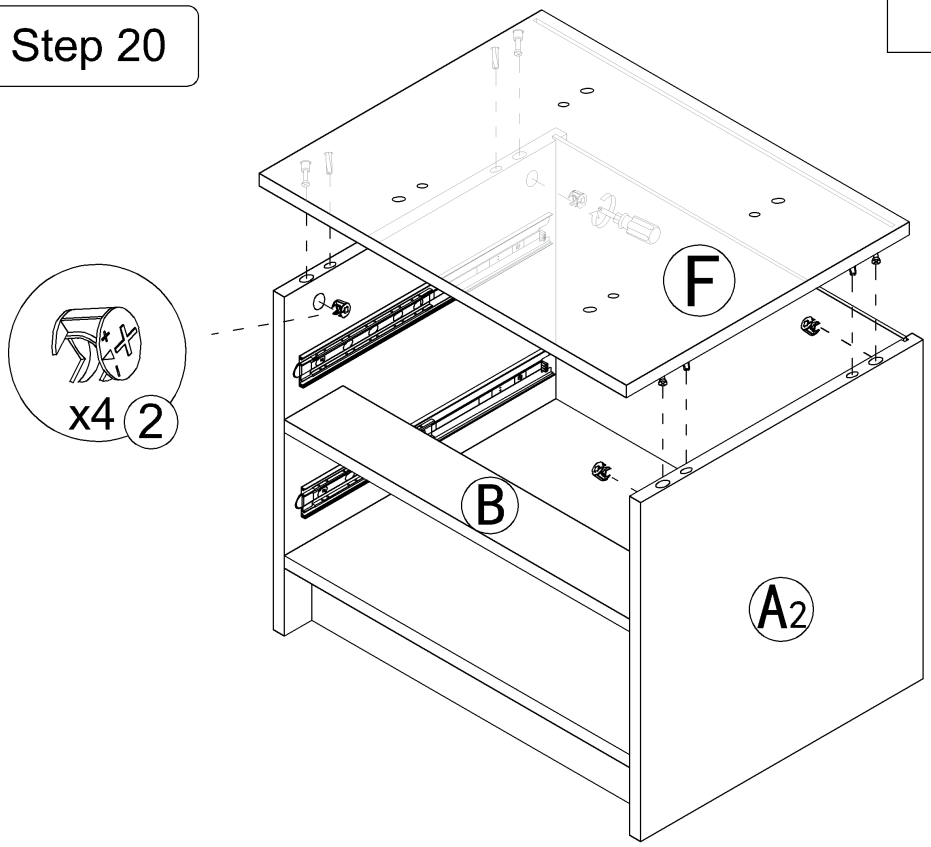

Step 21

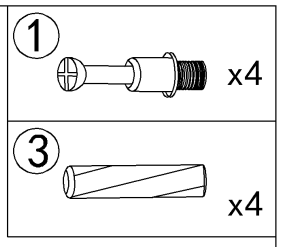

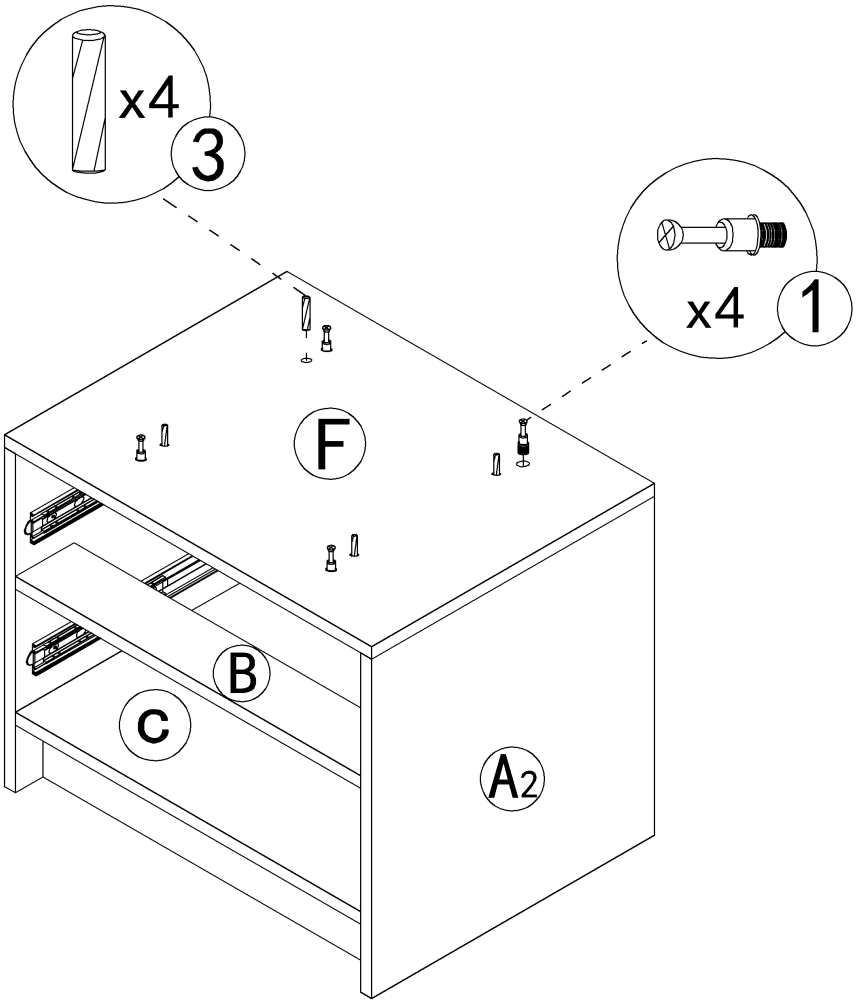

1	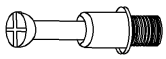	16pcs	3	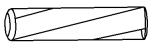	4pcs	6	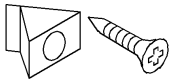	4pcs
2		20pcs		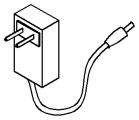	1pcs			

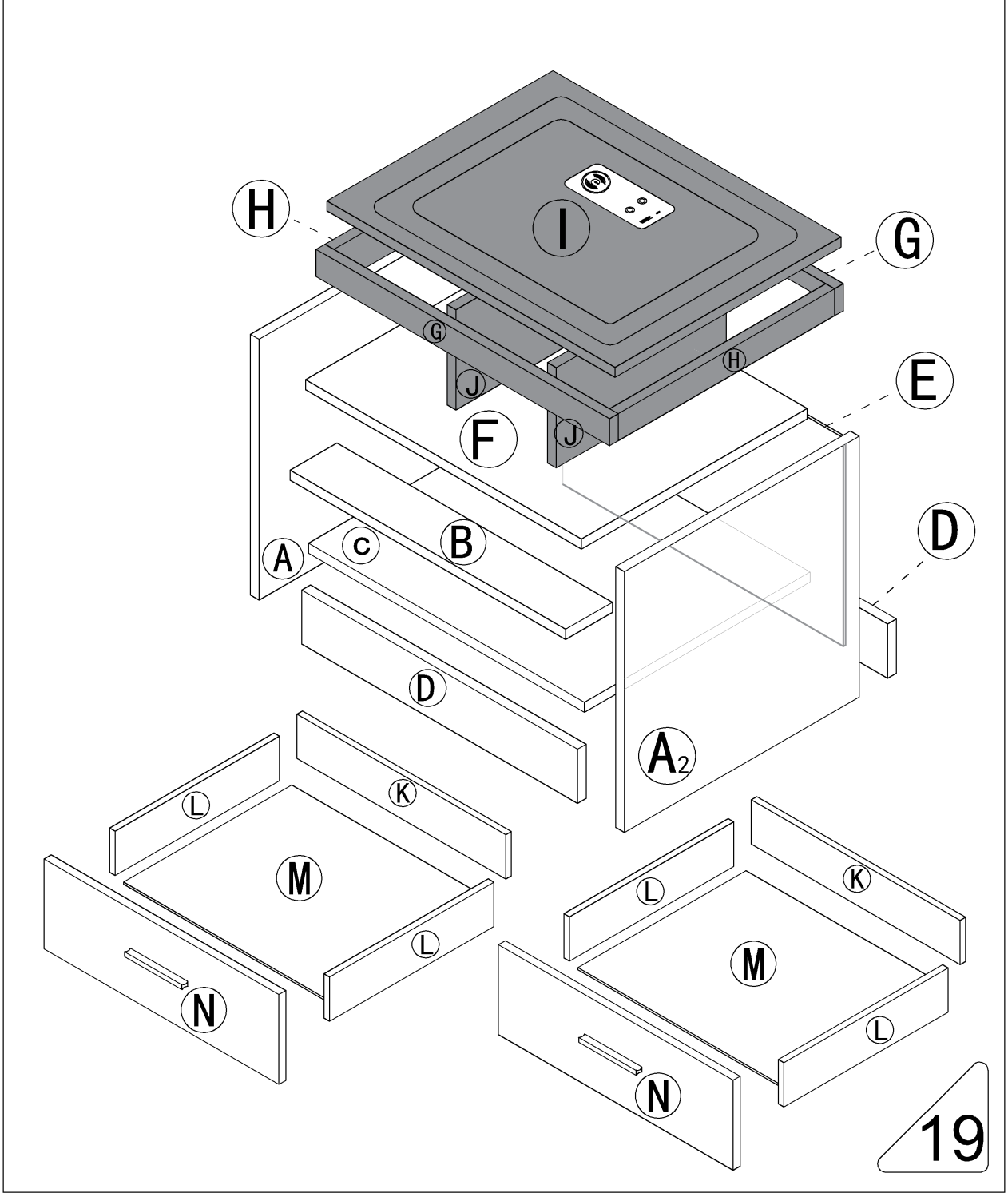

Step 22

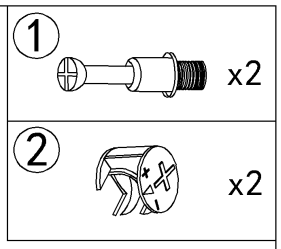

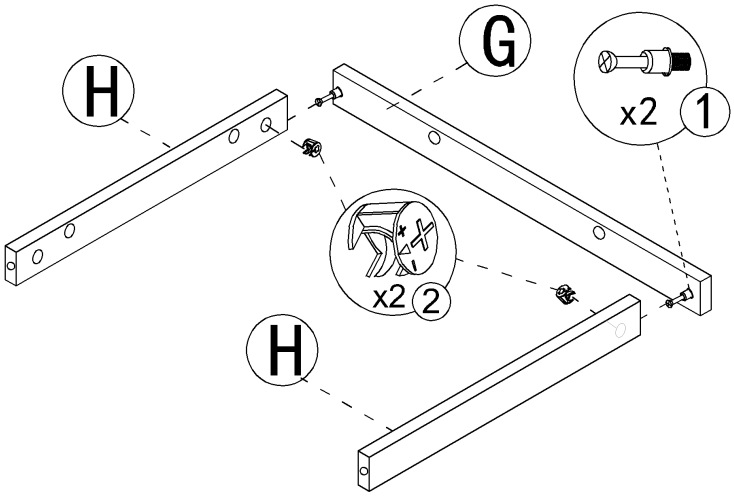

Step 23

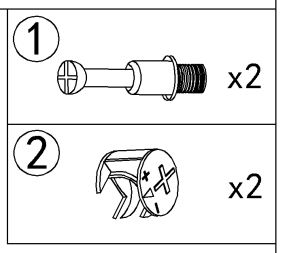

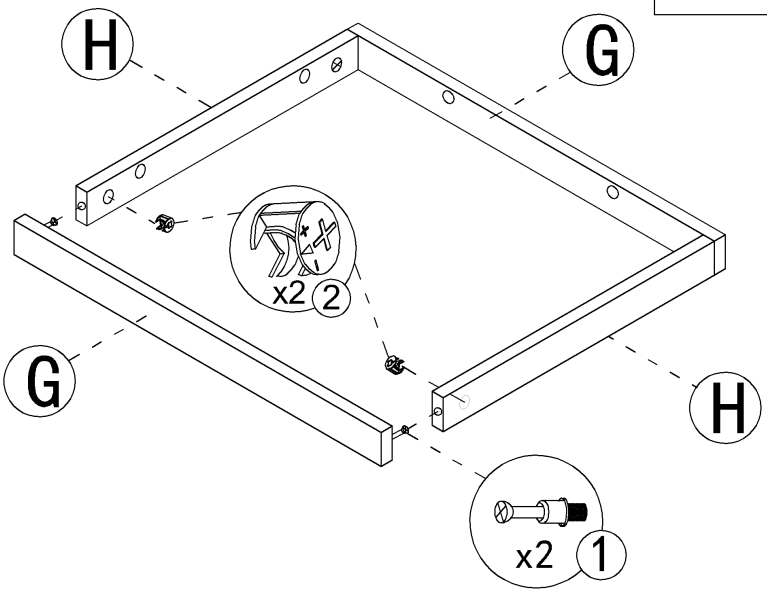

Step 24

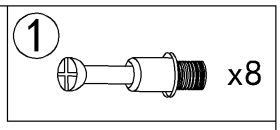

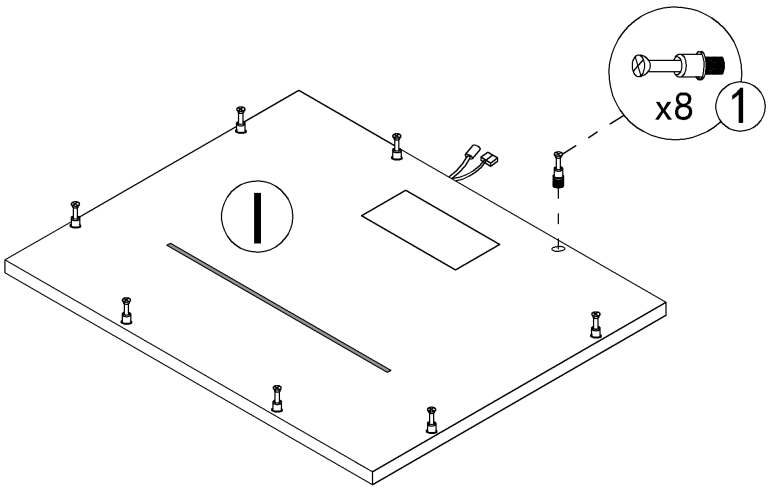

Step 25

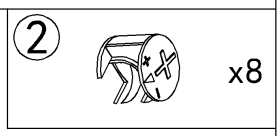

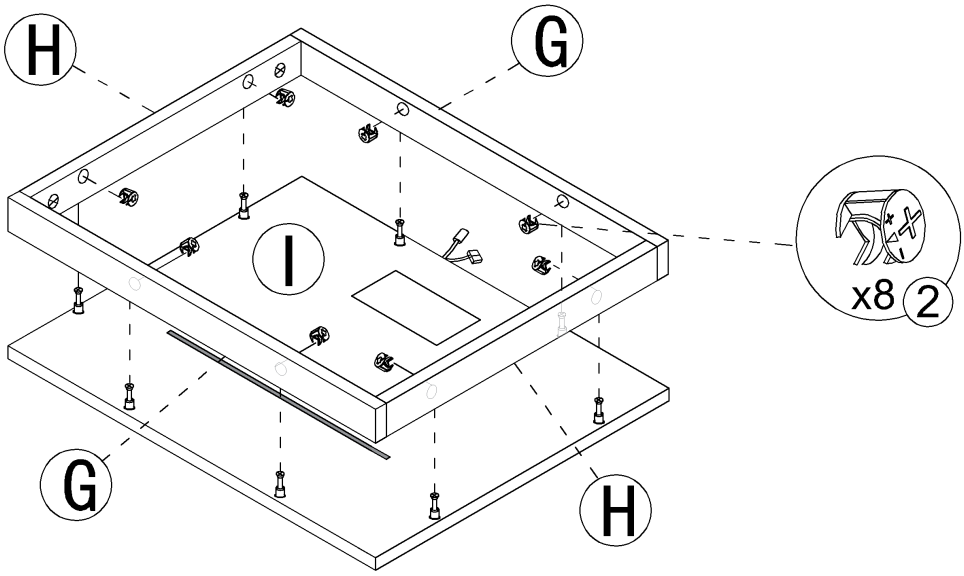

Step 26

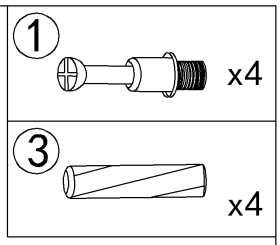

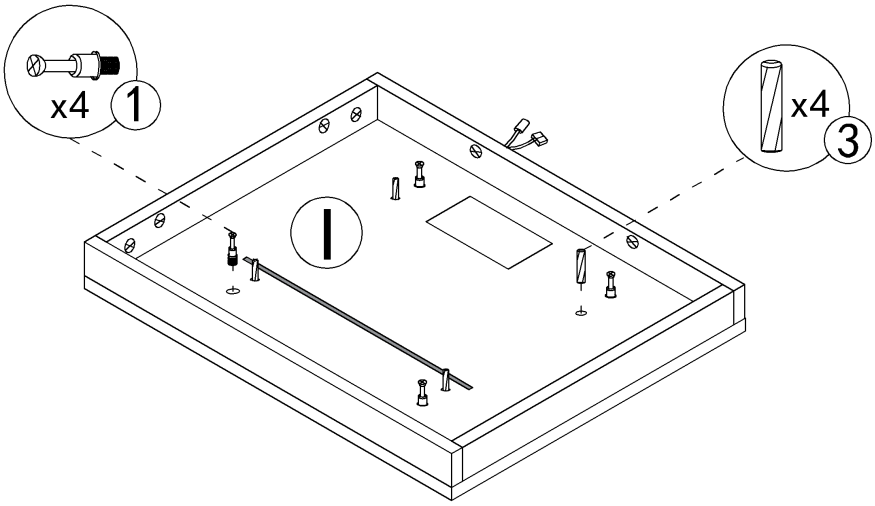

Step 27

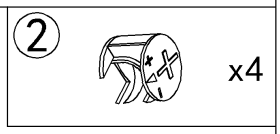

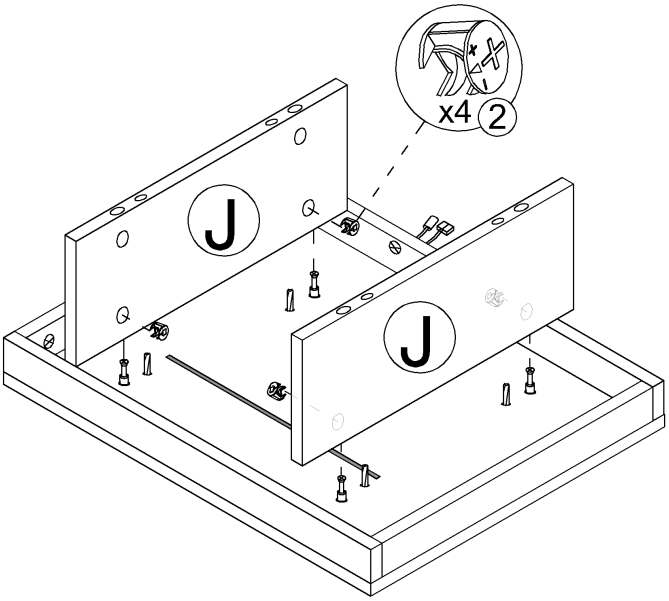

Step 28

2 x4

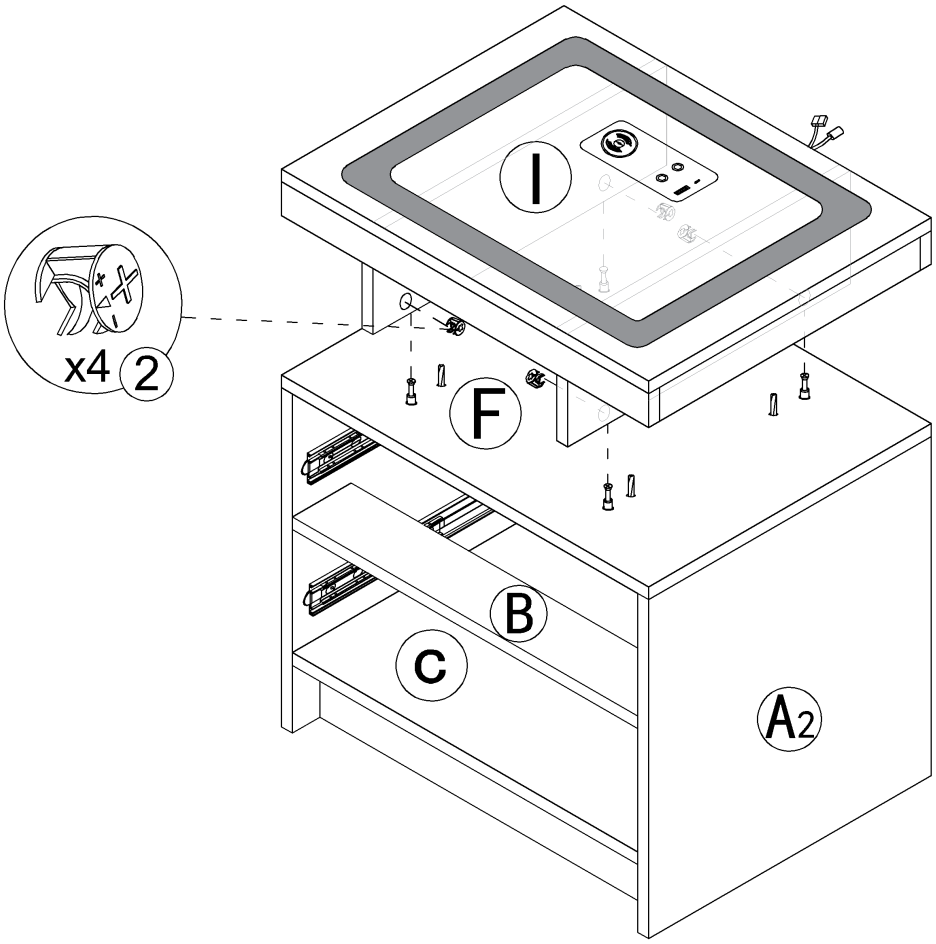

Step 29

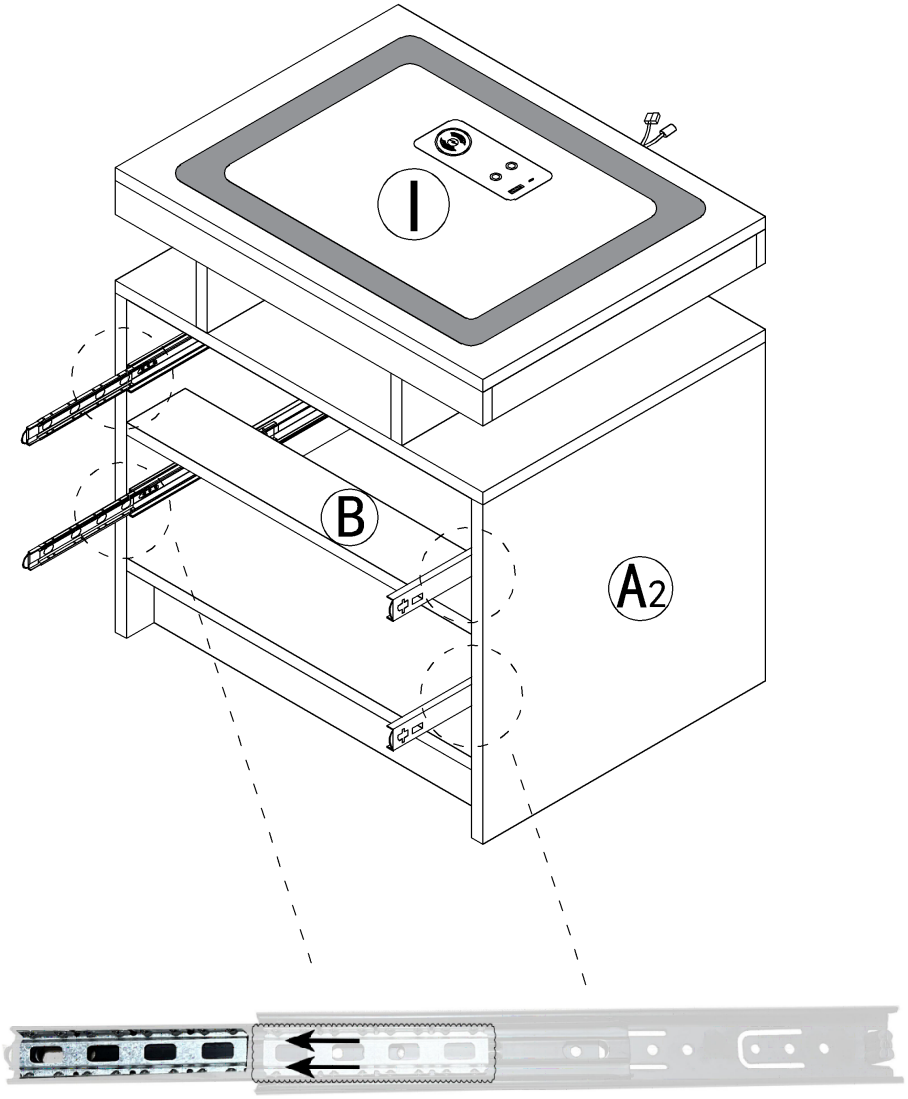

As shown，When installing the drawer,
pull the guide rail out first, Slide beads are also pulled out.

Step 30

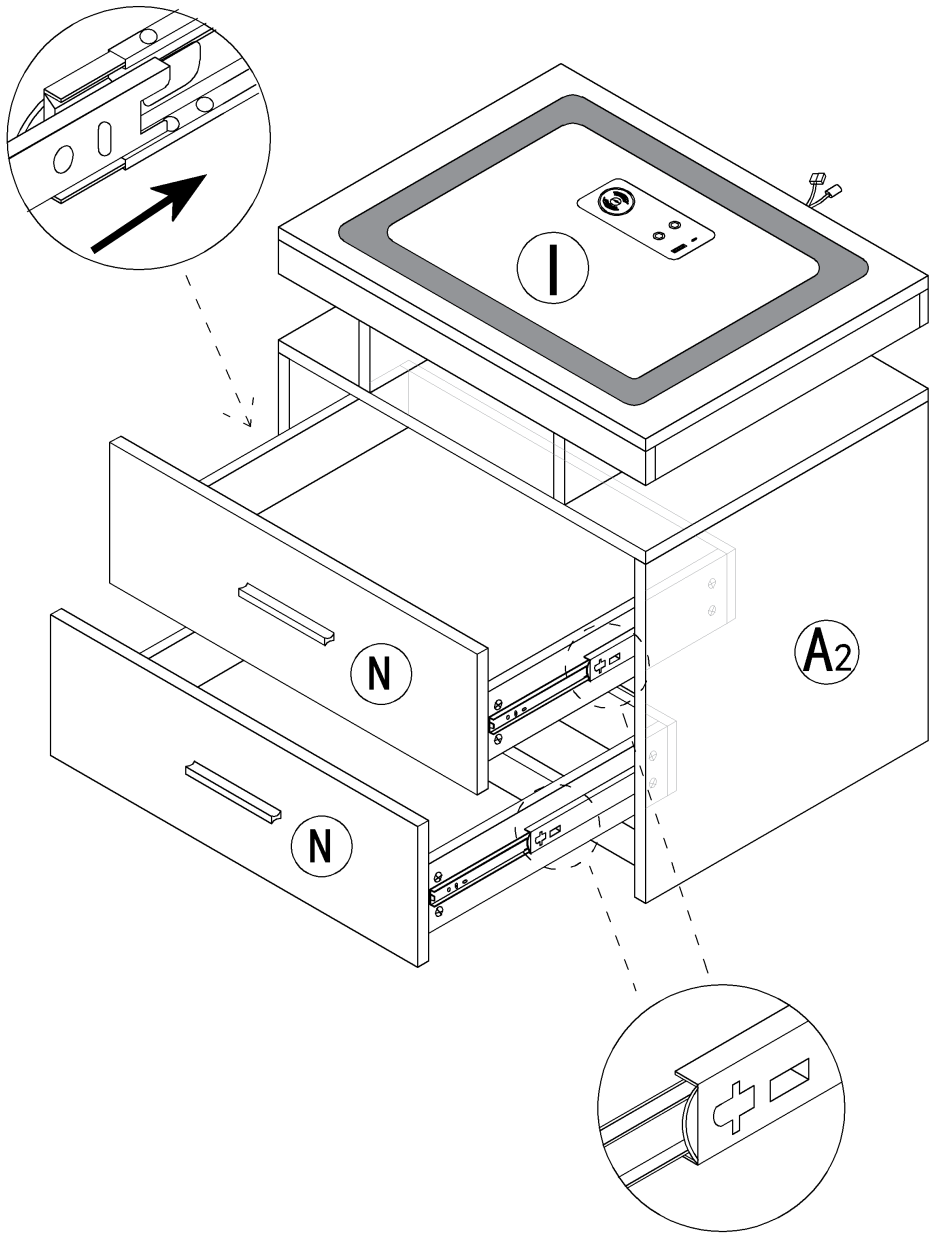

Step 31

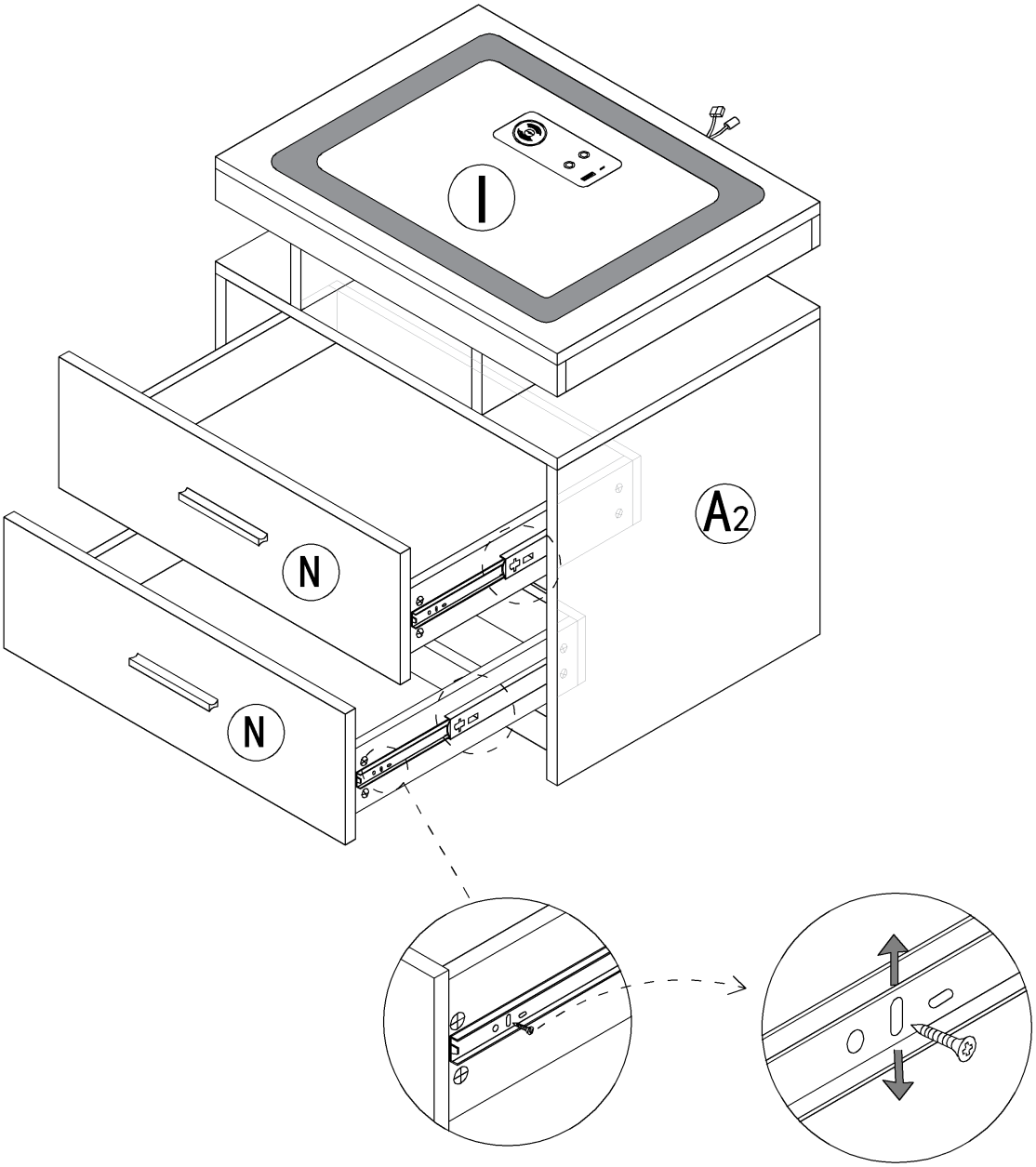

If a large gap is found after installing the drawer the slide rail can be moved up and down to adjust the gap

Step 32

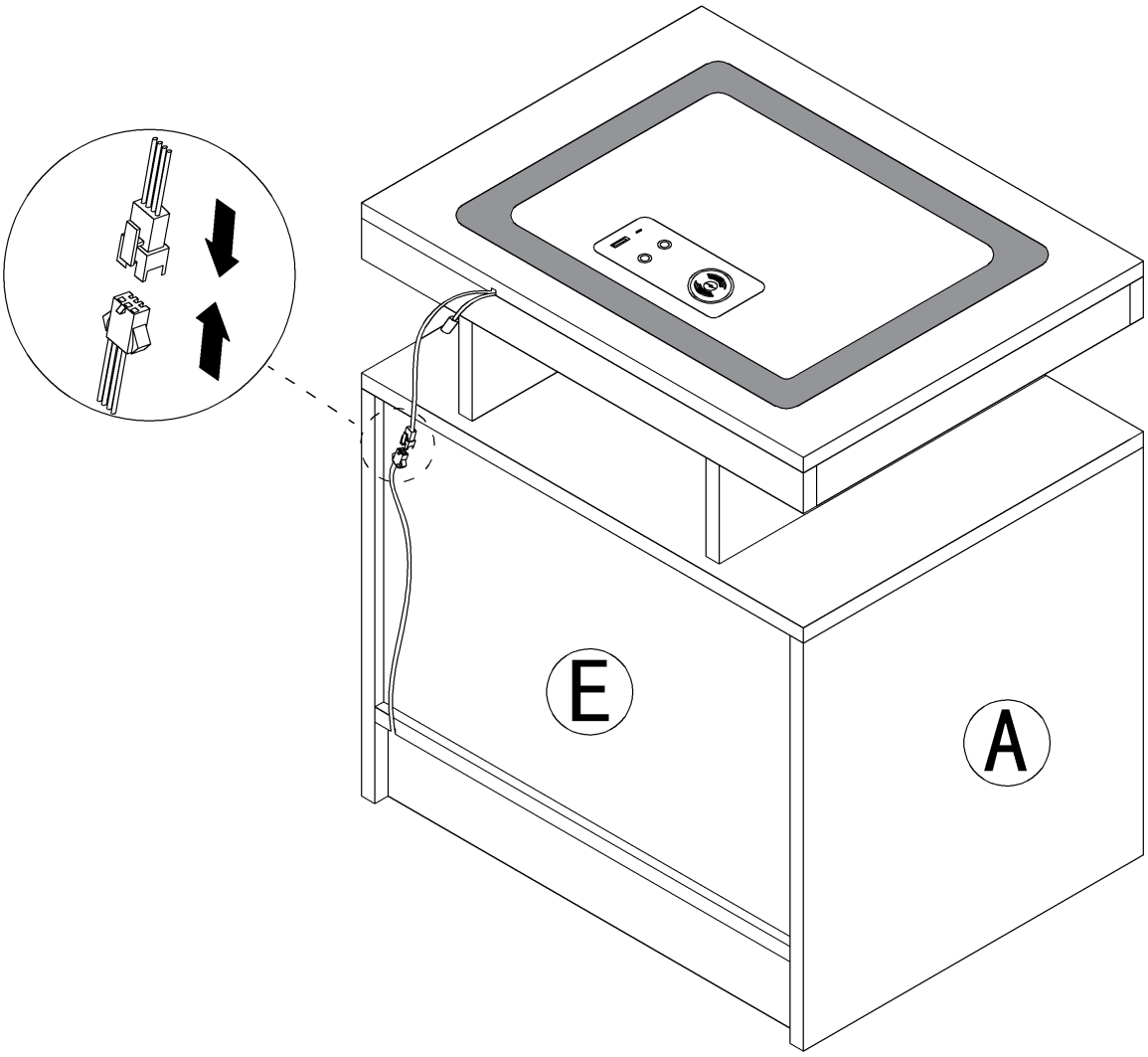

Step 33

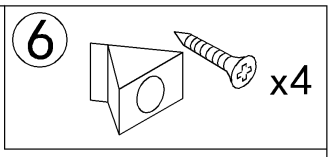

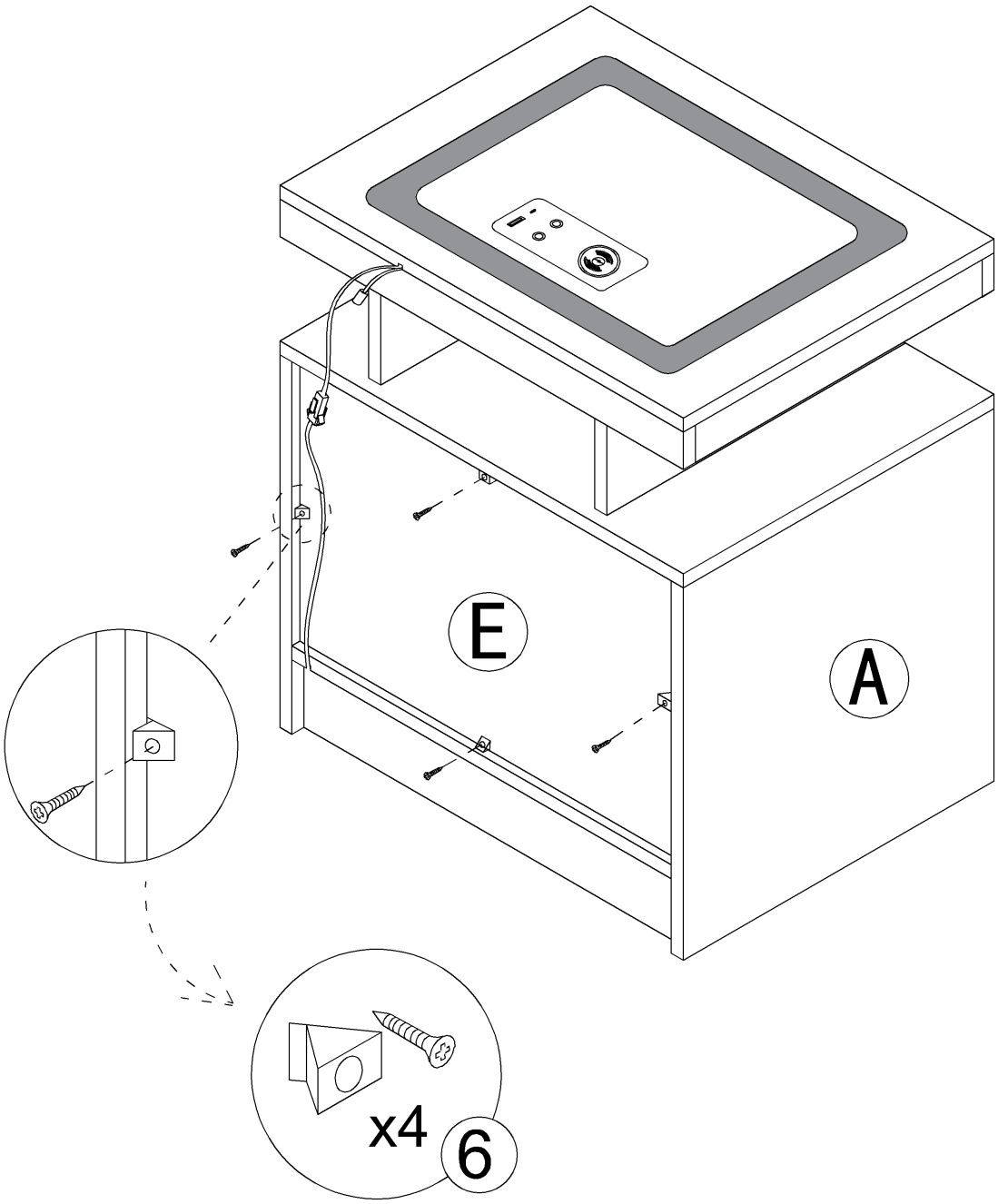

Step 34

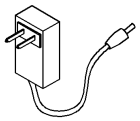

x1

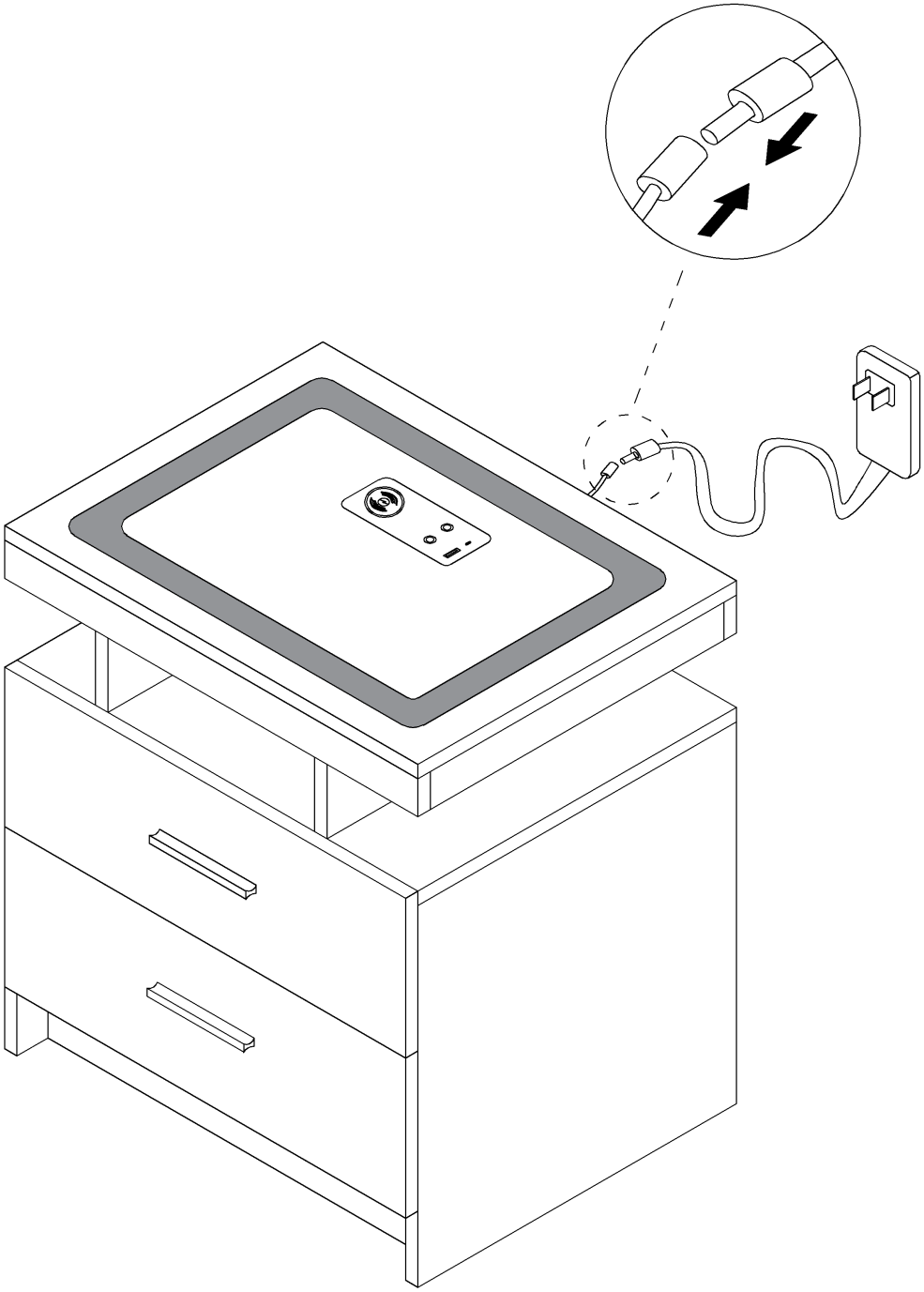

User's Guide

Thank you for purchasing this product.

To use this product, please plug it into a 12V DC power supply.

Please use if the product works normally after connecting to power.

Introduction

The box is an intelligent controller. It has 1 USB port and 1 type-C portand can distribute the current output up to 5V DC-2A. With 2 touch buttons, it can turn ON/OFF the light, change light colors, and adjust the light luminance.

Operation

This touch button is used to turn on/off, change colors, and adjust brightness.

A. Short touch -> lighting on -> short touch -> change light color -> short touch -> change light color -> short touch -> lighting off.

B. Long touch -> adjust the luminance.

This touch button is used to turn on/off the induction function.

A . Short touch to turn on the induction function. It can auto-turn on the light when people are close to the controller in 1 meters. It can auto power off the light when the body is far away from the controller after 30 seconds.

B. Long touch to turn off the induction function.

C. Note: When you touch the light button to change the light modes, the induction function will automatically turn off. It is best to turn on this function after selecting the light color and adjusting the brightness you want.

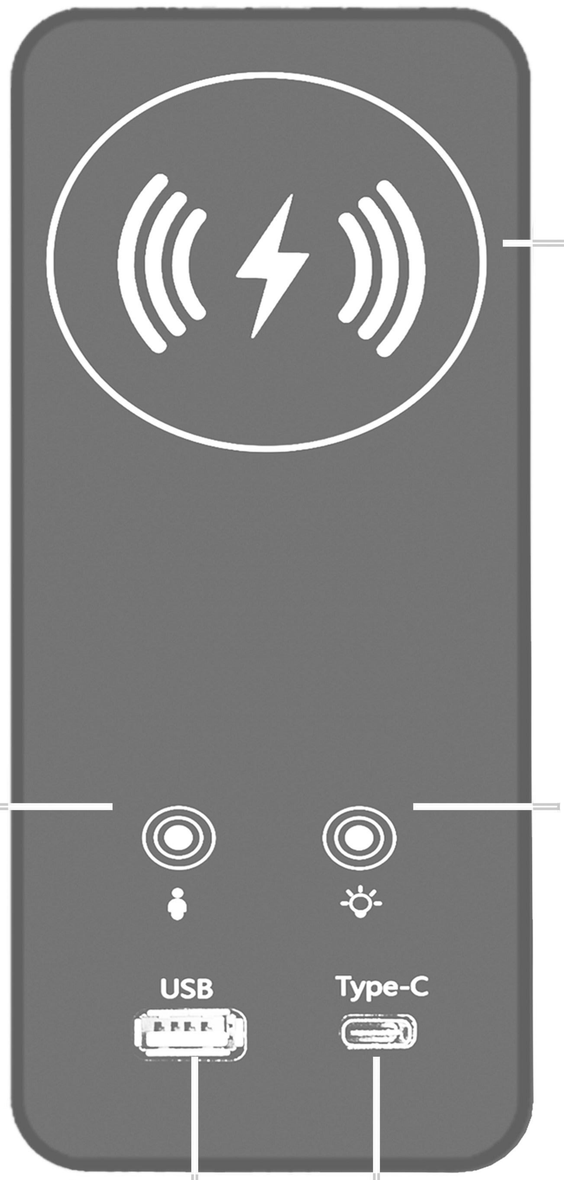

This range is a wireless charging area,and only mobile phones with wireless charging function can be charged.

Consumer Reminder: Important Notice for Wireless Charging Use

1, Phone-Only Wireless Charging: This device supports wireless charging for mobile phones only. Attempting to charge other electronic devices may result in danger.

2, Metal Warning: Ensure that no metal objects are placed between your phone and the wireless charger (this includes magnetic or metal phone cases).

If there are metal objects can interfere with charging or cause hazardous conditions.

ATTENTION PLEASE

1. If there is no touch response suddenly, Re-plug the power to reset the touch static electricity.
2. If bubbles appear on the panel, remove the protective film.
3. If you have any questions when installing, please feel free to contact us. Thank you.