ASSEMBLY INSTRUCTIONS

L SHAPE PATIO FURNITURE SETS

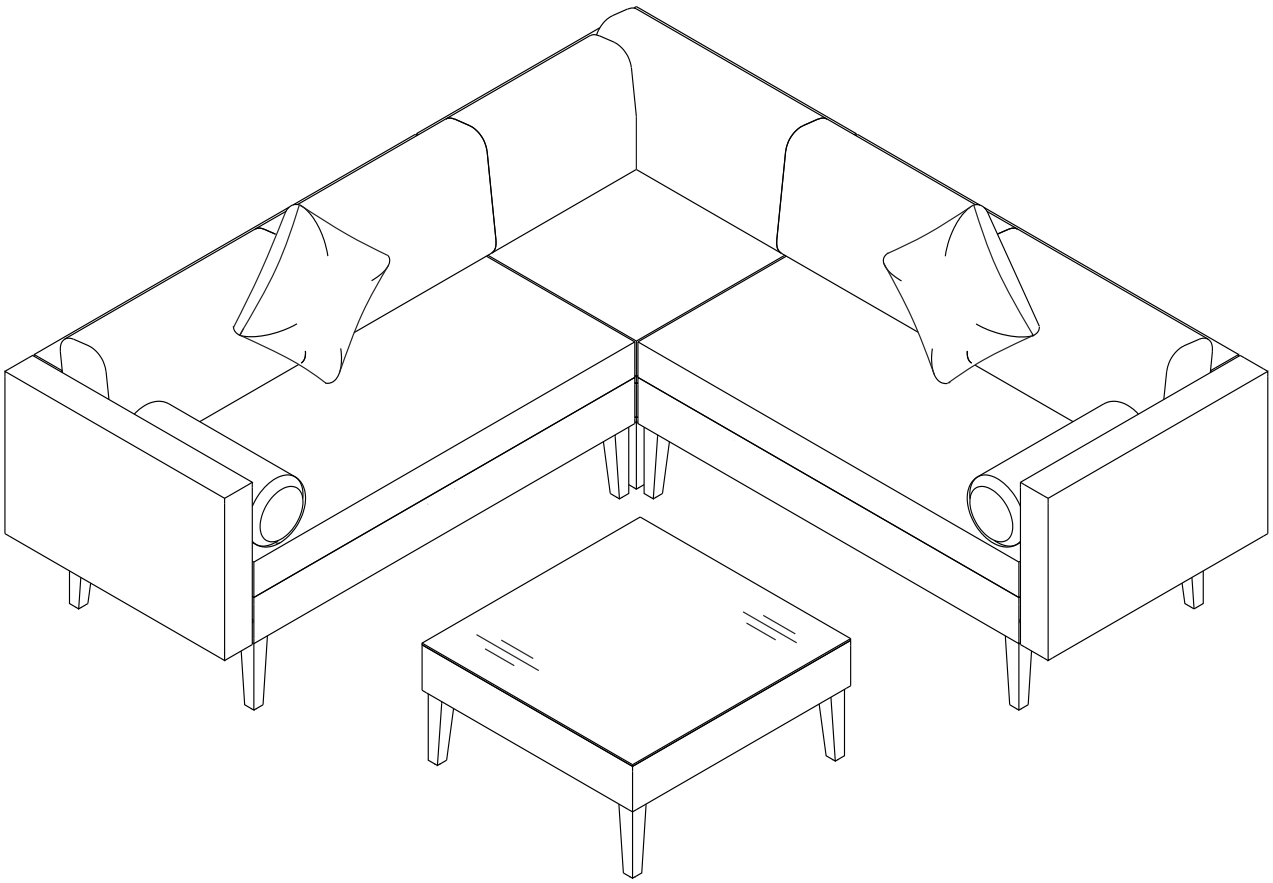

NOTE: 50% TIGHTEN BEFORE FIXING ALL BOLTS

(1 x Right Bench)

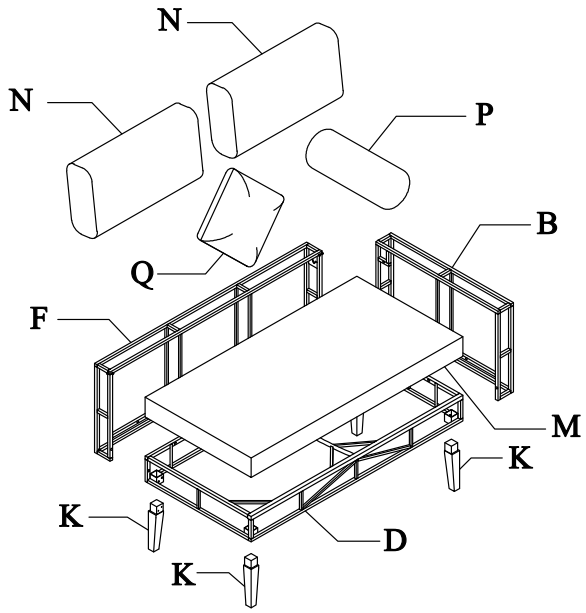

(1 x Left Bench)

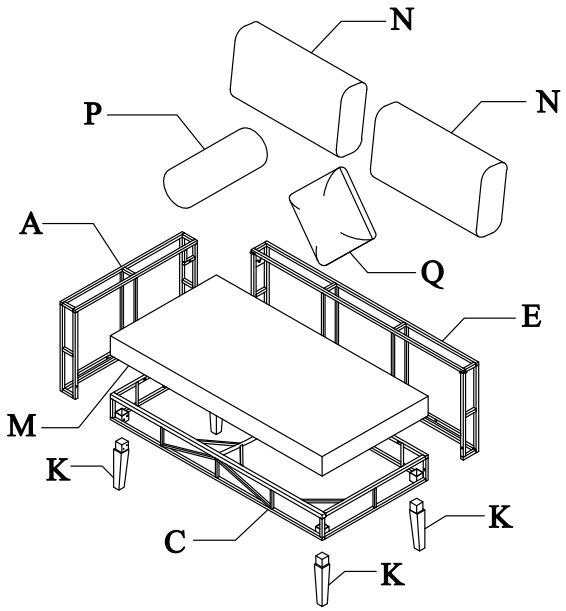

(1 x Corner Chair)

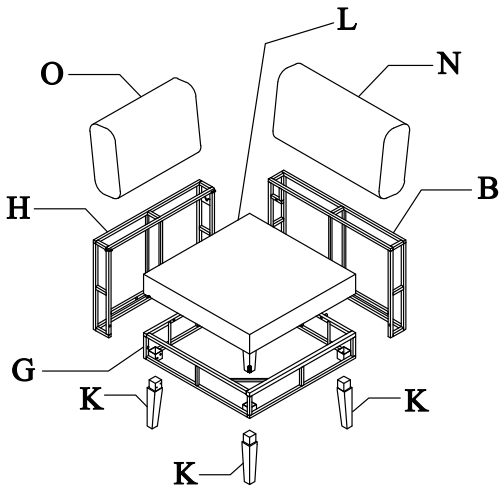

(1 x Table)

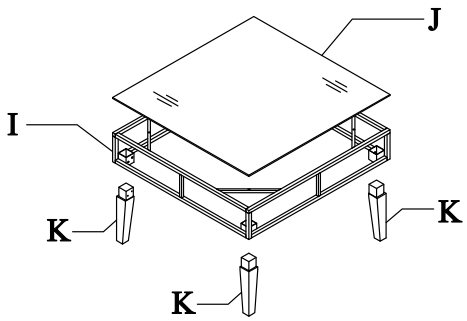

Notice:

1. 50% Tighten before fixing all screws, Allen wrench is recommended instead of an electric drill.
2. Place the item on a flat ground to adjust and make sure it remains stable
3. Tighten up all screws with tools gradually.
4. If the screws are not aligned with holes during assembly, please loosen all the other screws to 50% and continue the assembly process.
5. If the item is not stable, please loosen all the screws, adjust it on a flat ground and tighten up all screws again.
6. Note : If one or some screws are fully tightened during assembly, chances are the others will not be aligned with holes. In addition, all the holes are designed to be relatively larger to provide more space for the adjustment of the screws.

Part List

A 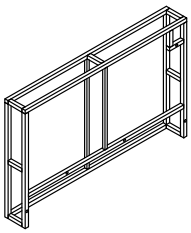 Arm Left Frame (1 pc)	B 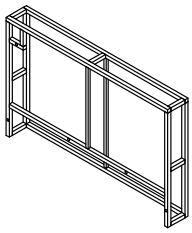 Arm Right Frame (2 pcs)	C 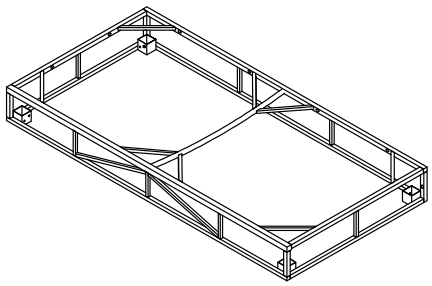 Seat Left Bench (1 pc)
D 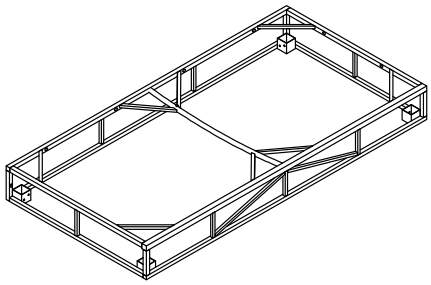 Seat Right Bench (1 pc)	E 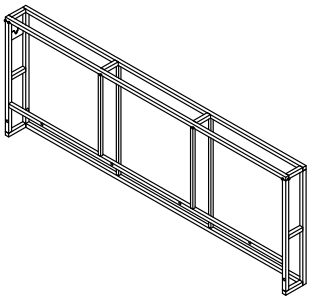 Back Left Frame (1 pc)	F 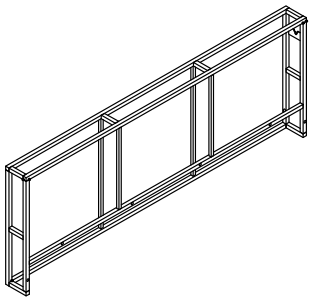 Back Right Frame (1 pc)
G 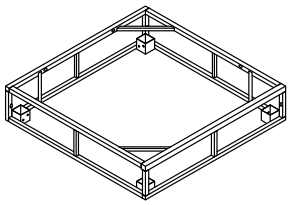 Seat Corner Frame (1 pc)	H 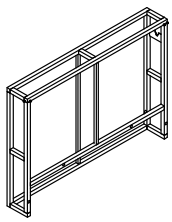 Back Corner Frame (1 pc)	I 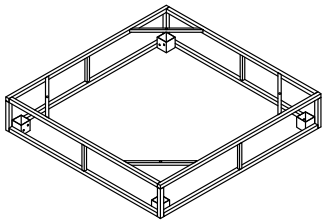 Table Top Frame (1 pc)
J 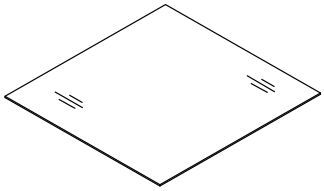 Table Glass (1 pc)	K  Wooden Leg (16 pcs)	L 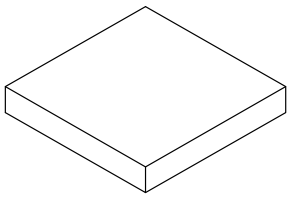 Corner Seat Cushion (1 pc)

Part List

M	N	O
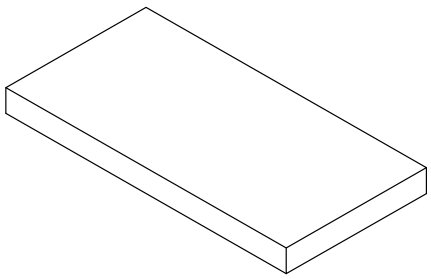	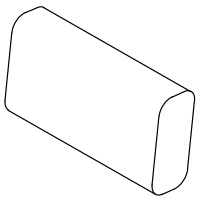	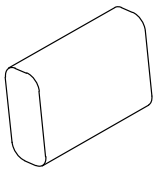
Bench Cushion (2 pc)	Big Back Pillow (5 pcs)	Small Back Pillow (1 pc)
P	**Q**	
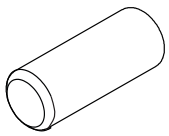	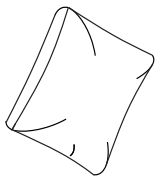	
Bolster (2 pcs)	Back Pillow (2 pcs)	

Hardware List

1	2	3
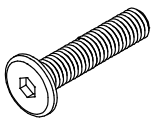	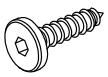	
Bolt M6 x 35 mm 28 pcs + extra 2 pcs	Screw M6 x 20 mm 32 pcs + extra 3 pcs	Washer M6 x 1 mm 28 pcs + extra 2 pcs
4		
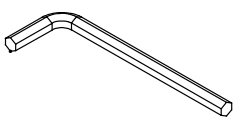		
Allen Key M4 (2 pcs)		

CARTON CONTENT:

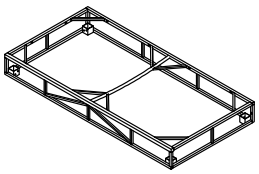

C x 1

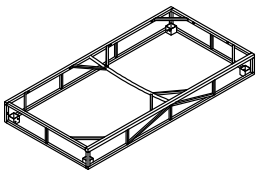

D x 1

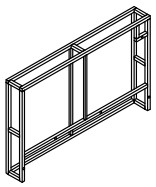

A x 1

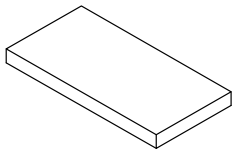

M x 2

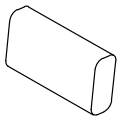

N x 1

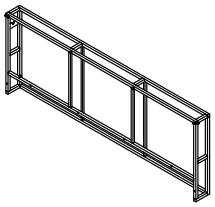

E x 1

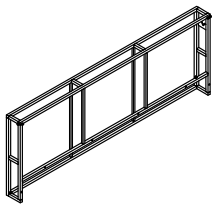

F x 1

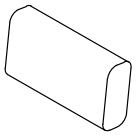

N x 2



K x 16

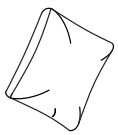

Q x 2

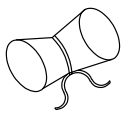

HARDWARE

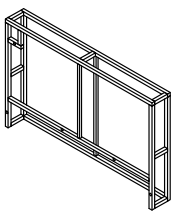

B x 2

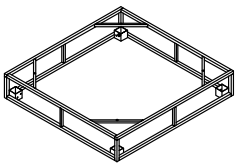

G x 1

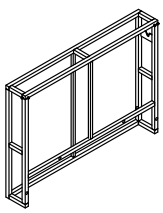

H x 1

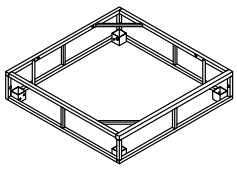

I x 1

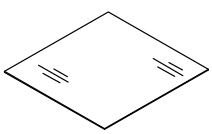

J x 1

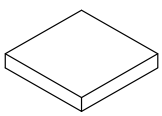

L x 1

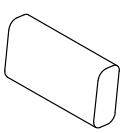

N x 2

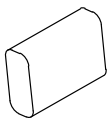

O x 1

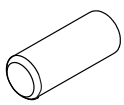

P x 2

STEP 1 (1 x Left Bench assembly)

Connect Seat Left Bench (C) & Wooden Leg (K) with Screw (2)

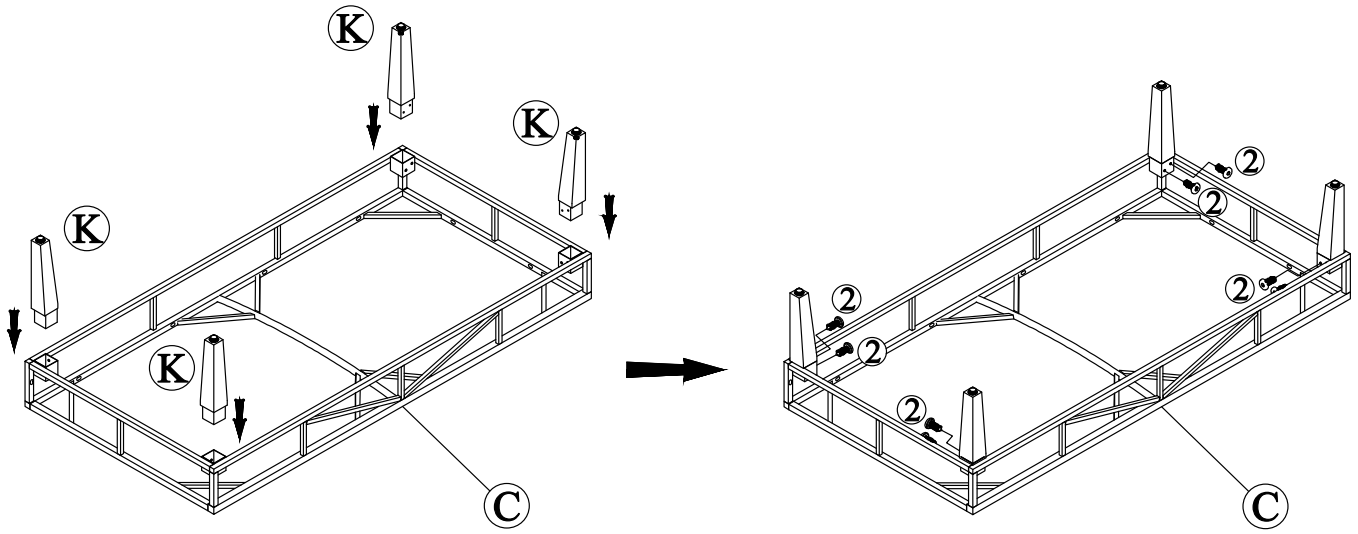

②*8 | C*1 | K*4

STEP 2

Connect part from Step 1 & Back Left Frame (E) with Bolt (1) & Washer (3)

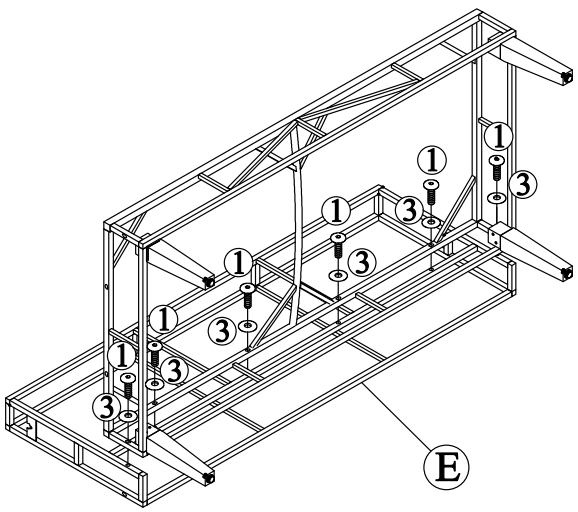

①*6 | ③*6 | E*1

STEP 3

Connect part from Step 2 & Arm Left Frame (A) with Bolt (1) & Washer (3)

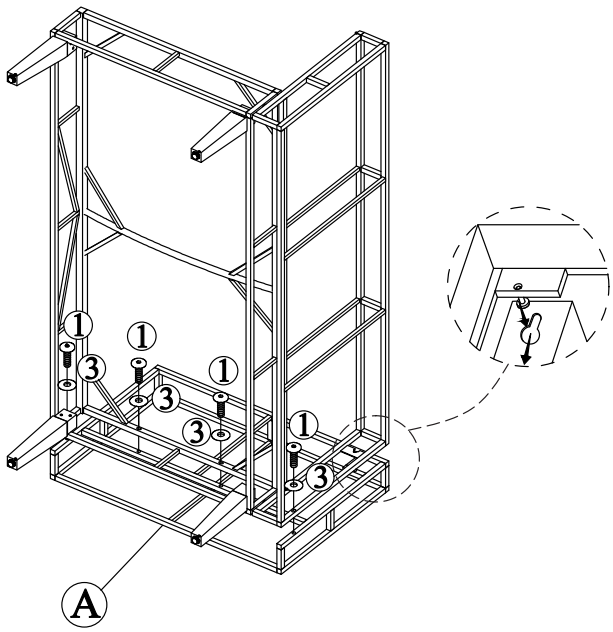

①*4 | ③*4 | A*1

STEP 4

Put on Bench Cushion (M), Big Back Pillow (N), Back Pillow (Q) & Bolster (P) to complete Left Bench Chair

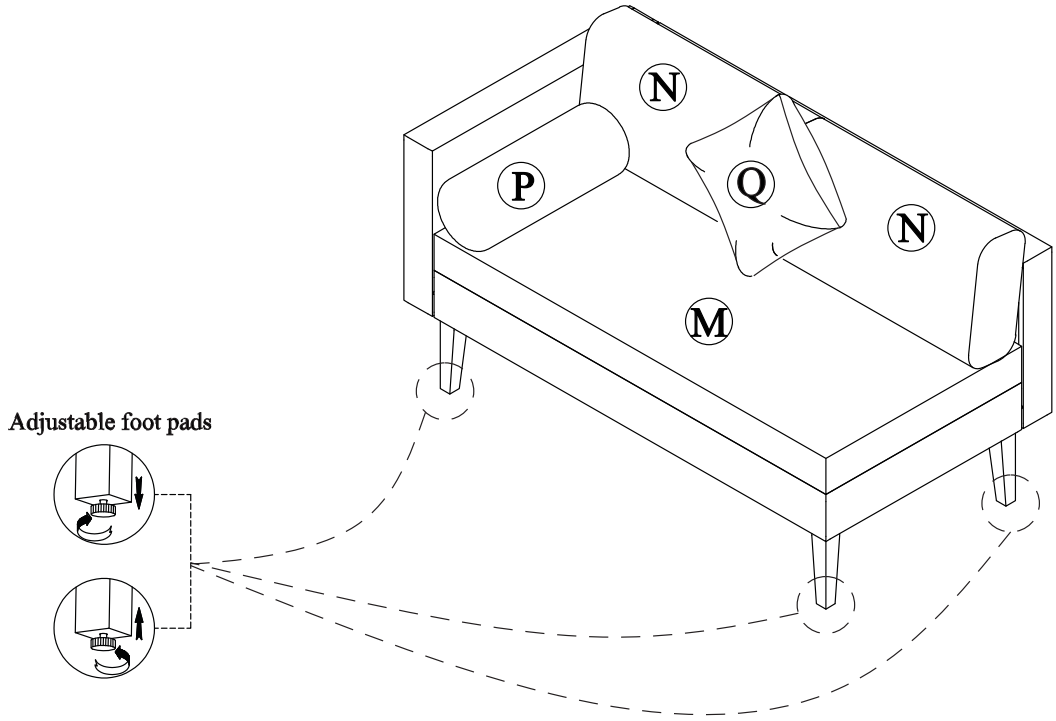

M*1	N*2	P*1	Q*1

STEP 5 (1 x Right Bench assembly)

Connect Seat Right Bench (D) & Wooden Leg (K) with Screw (2)

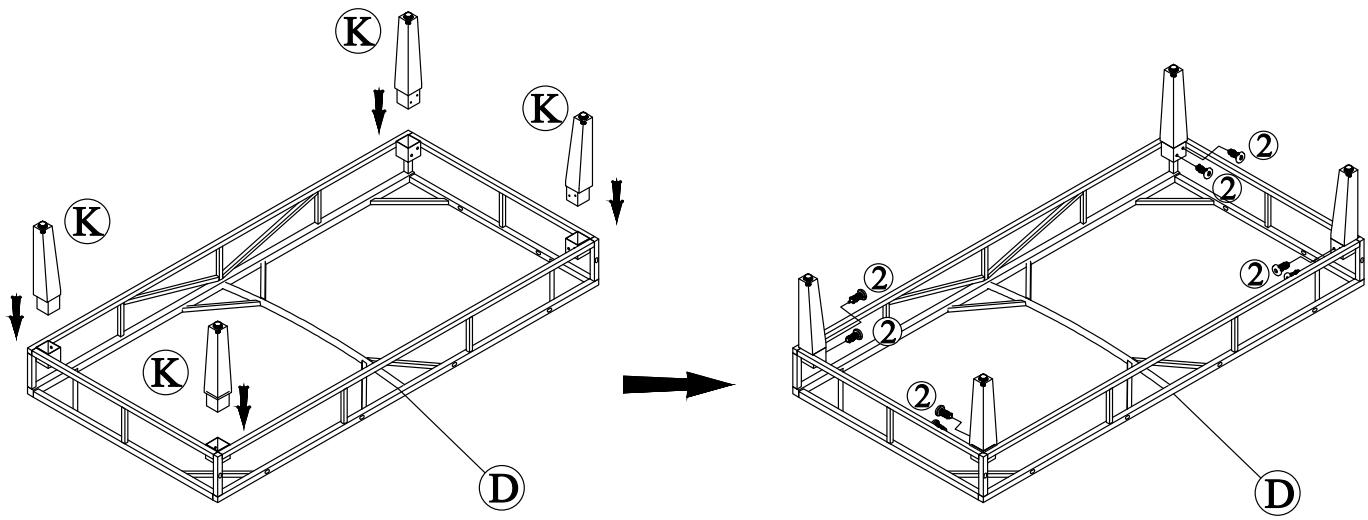

②*8	D*1	K*4

STEP 6

Connect part from Step 5 & Back Right Frame (F) with Bolt (1) & Washer (3)

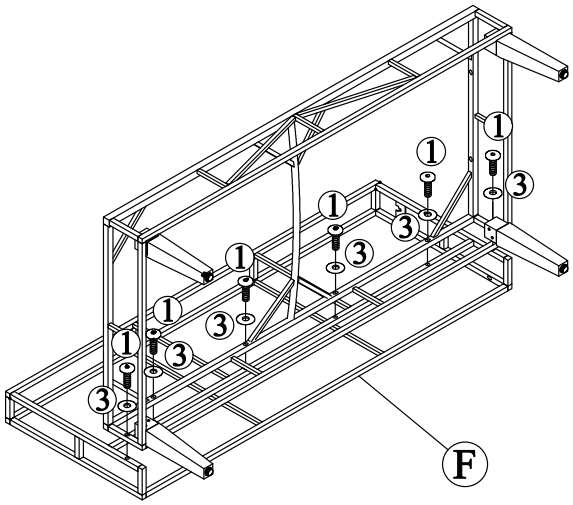

①*6 | ③*6 | F*1

STEP 7

Connect part from Step 6 & Arm Right Frame (B) with Bolt (1) & Washer (3)

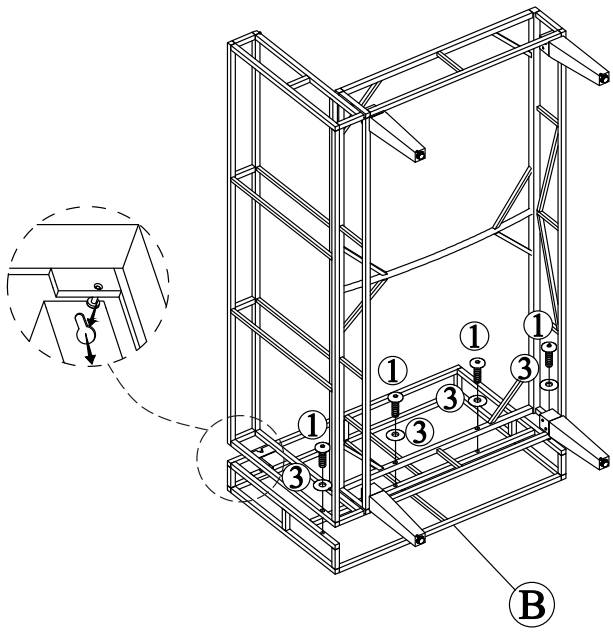

①*4 | ③*4 | B*1

STEP 8

Put on Bench Cushion (M), Big Back Pillow (N), Back Pillow (Q) & Bolster (P) to complete Right Bench Chair

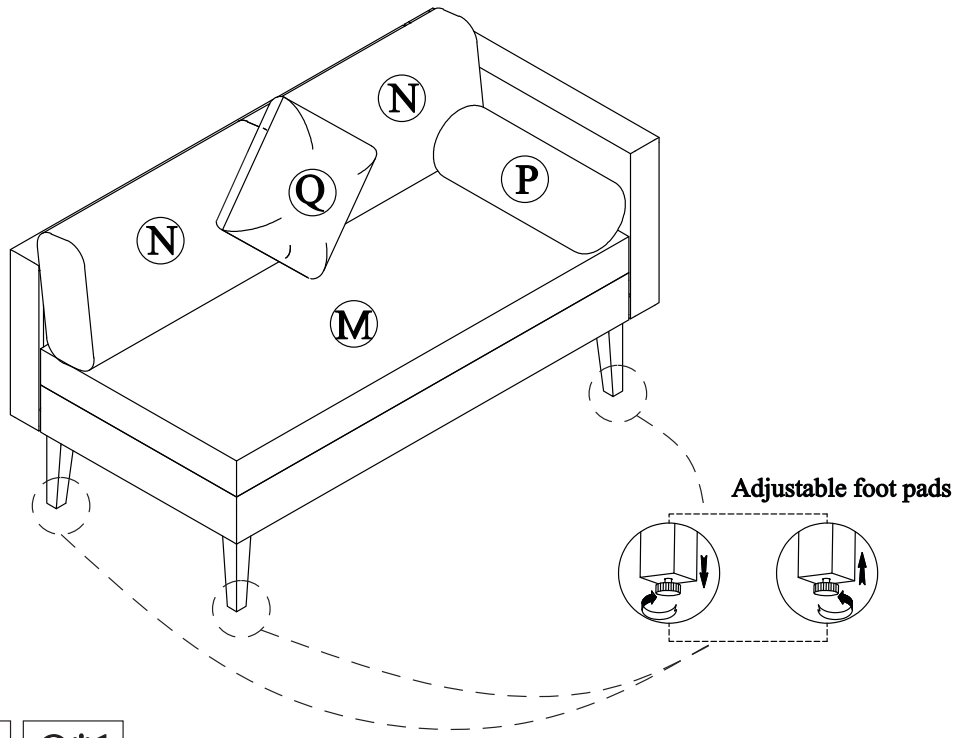

M*1 | N*2 | P*1 | Q*1

STEP 9 (1 x Corner Chair assembly)

Connect Seat Corner Frame (G) & Wooden Leg (K) with Screw (2)

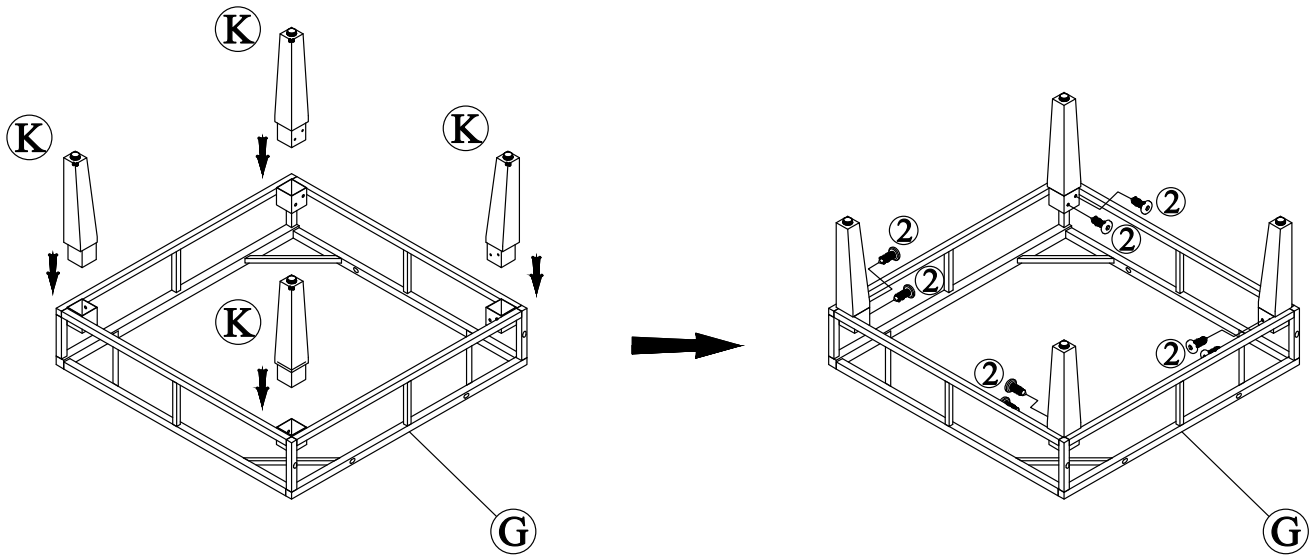

②*8 | G*1 | K*4

STEP 10

Connect part from Step 9 & Back Corner Frame (H) with Bolt (1) & Washer (3)

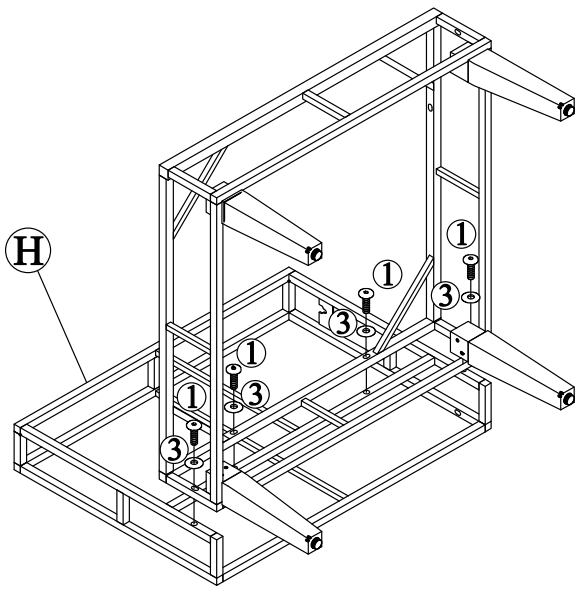

①*4 | ③*4 | H*1

STEP 11

Connect part from Step 10 & Arm Right Frame (B) with Bolt (1) & Washer (3)

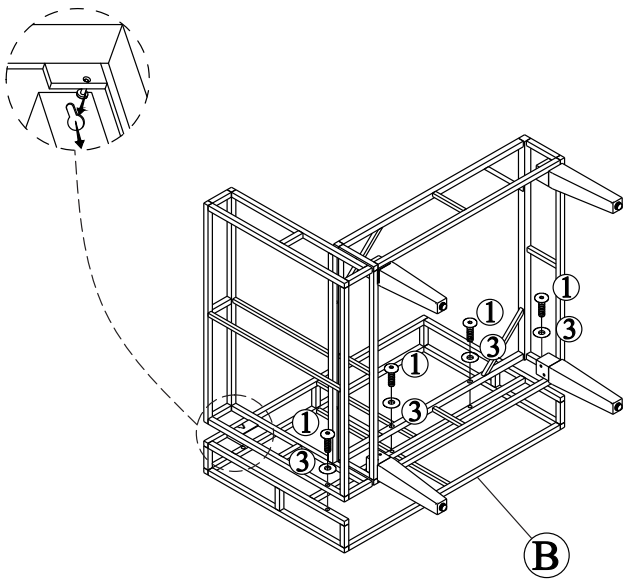

①*4 | ③*4 | B*1

STEP 12

Put on Corner Seat Cushion (L), Big Back Pillow (N) & Small Back Pillow (O) to complete Corner chair

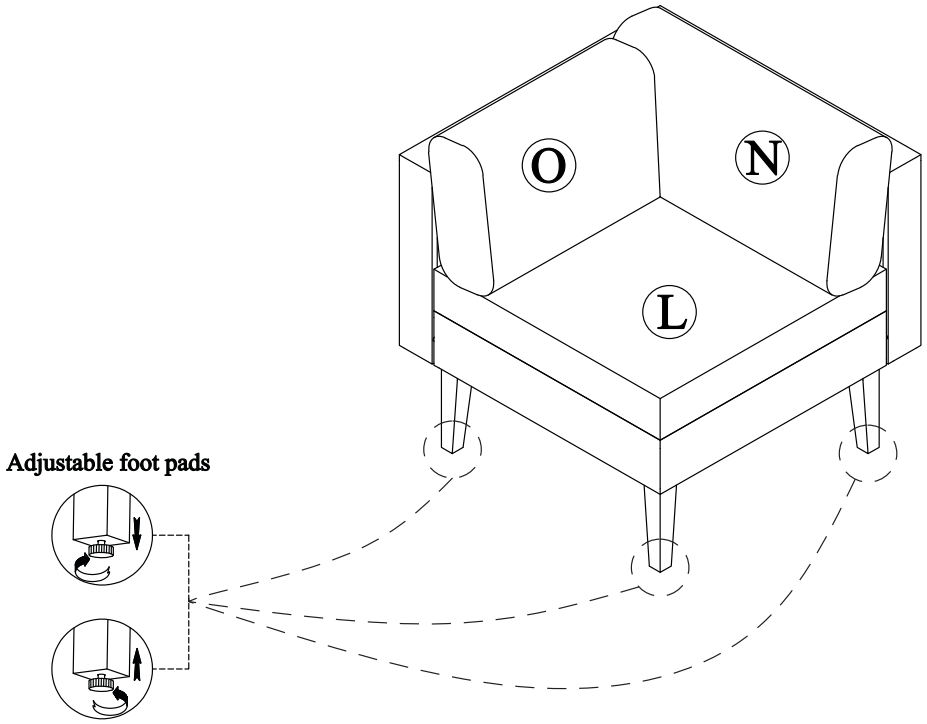

L*1	N*1	O*1

STEP 13 (1 x Table assembly)

Connect Table Top Frame (I) & Wooden Leg (K) with Screw (2)

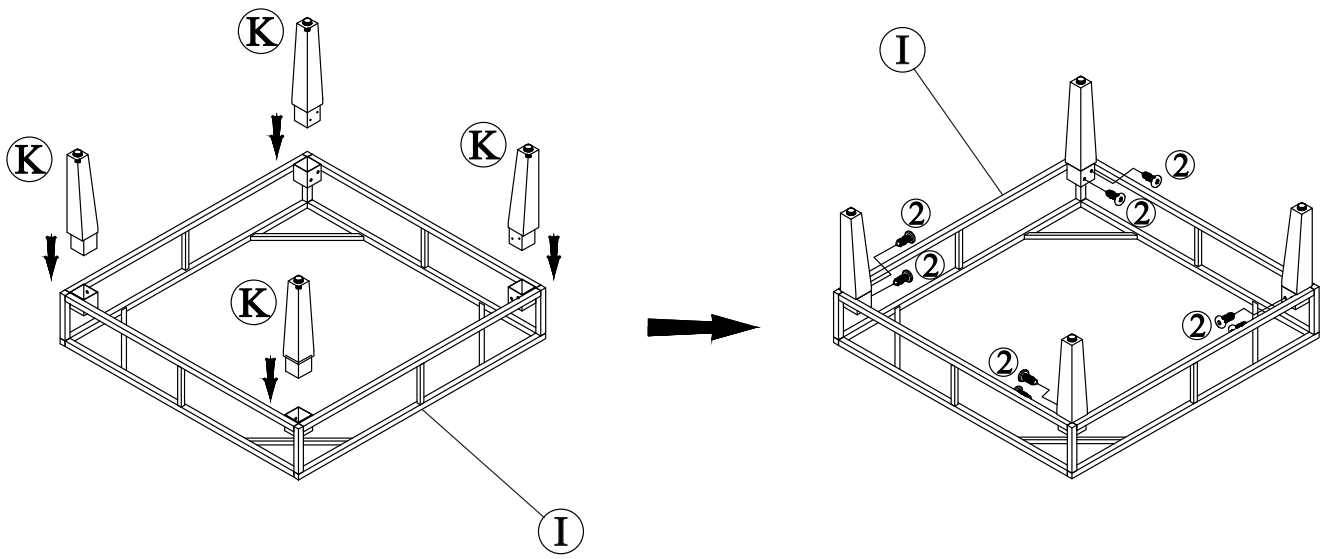

②*8	I*1	K*4

STEP 14

Put on Table Glass (J) to complete Table

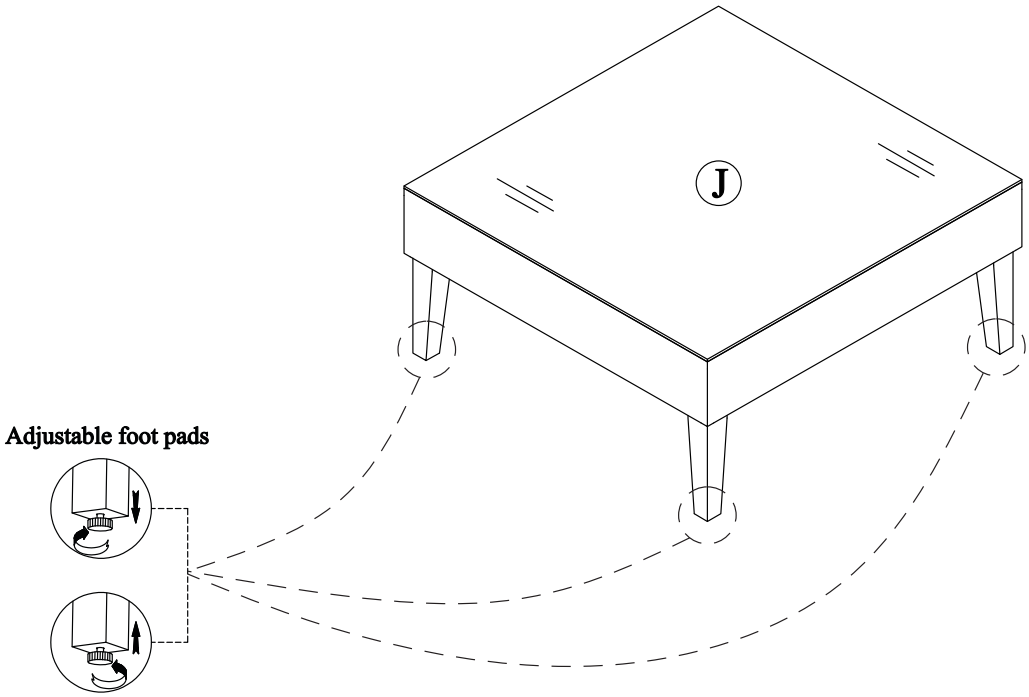

J*1

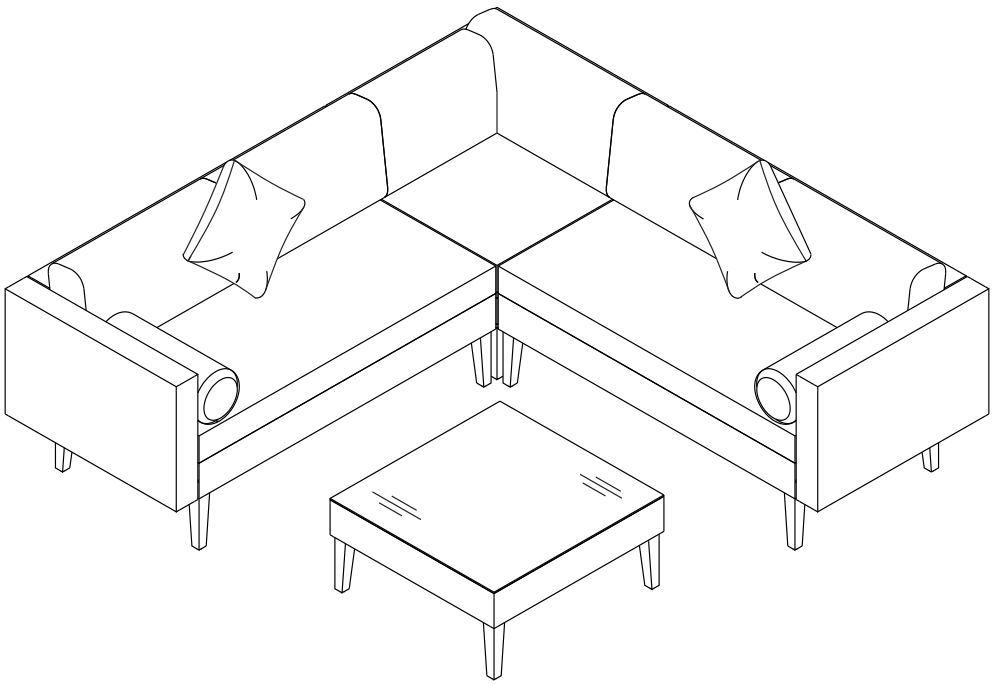

FINISH