BATHROOM VANITY SET

Colors/Finishes: OAK

Nominal Dimension:80W*22D*35H inches

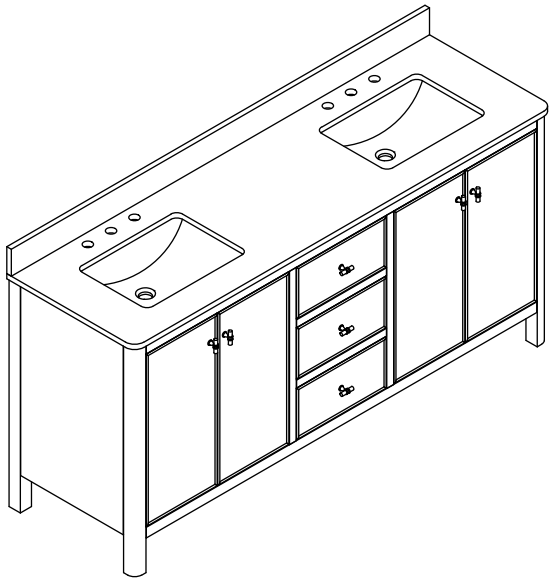

VANITY FEATURES:

1.Material: Oak wood frame, high-quality venner plywood.

2.Doors: 4 soft-close doors, Austria BLUM Soft-close hinges system.

3.Drawers: 3 soft-close drawers ,DTC concealed soft-close sliders.

4.Installation Type: Freestanding

5.Built-in Adjusters: Adjustable height levelers

6.Vanity Top: High-quality quartz with two undermount sinks

7.Assemble required: No

8.Vanity top Included: Yes

9.Mirror Included: Optional

10.Medicine Cabinet Included: Optional

Contents

80″Vanity……PAGE2
80″Vanity Top……PAGE3
Vanity Installation……PAGE4

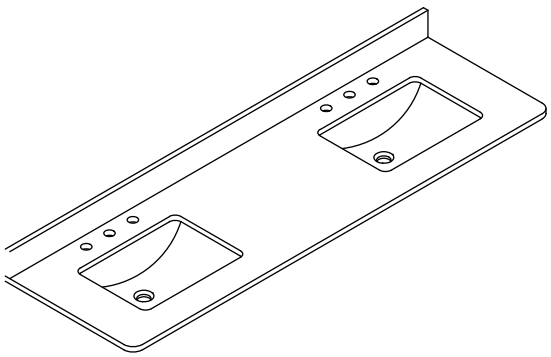

VANITY TOP FEATURES:

1.Material: Highly resilient, nonporous, scratch-and stain-resistant quartz.

2.Top Color: white quartz

3.Sink: 2*20”undermount rectangle sink

4.Faucet Holes: Top pre-drilled for 8”widespread faucet holes

5.Sink Certified: CUPC certified

6.Backsplash: 4”backsplash included

7.Faucet Included: No

8.Nominal Dimension(W*D*H): 80W*22D*0.79H inches

All dimensions and specifications are nominal and may vary.Use actual products for accuracy in critical situations.

BATHROOM VANITY SET

PRODUCT DIAGRAMS:

Front

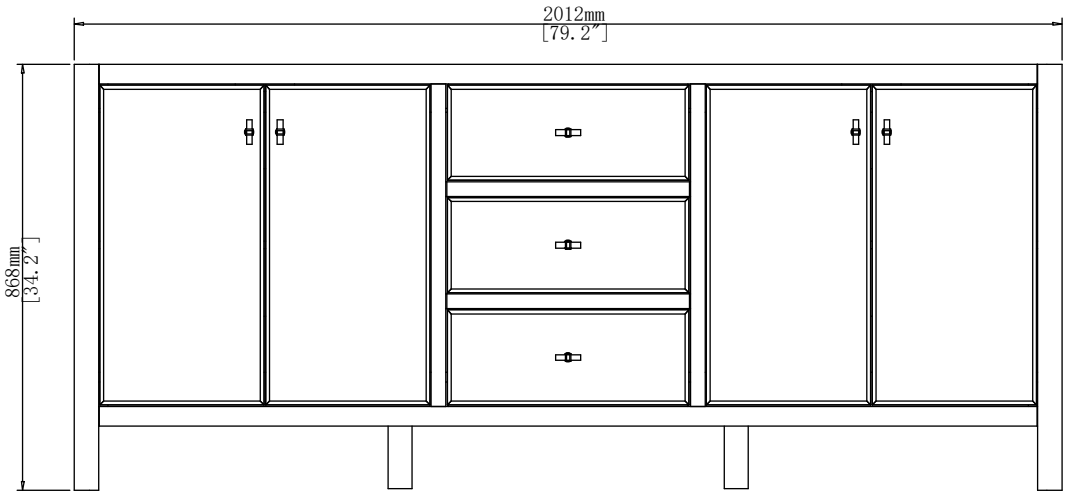

Back

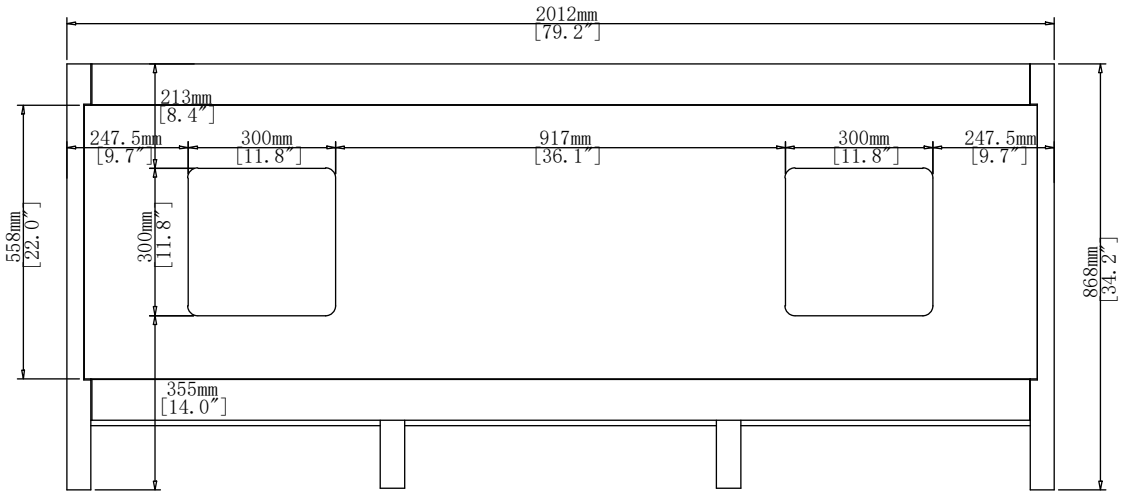

Top

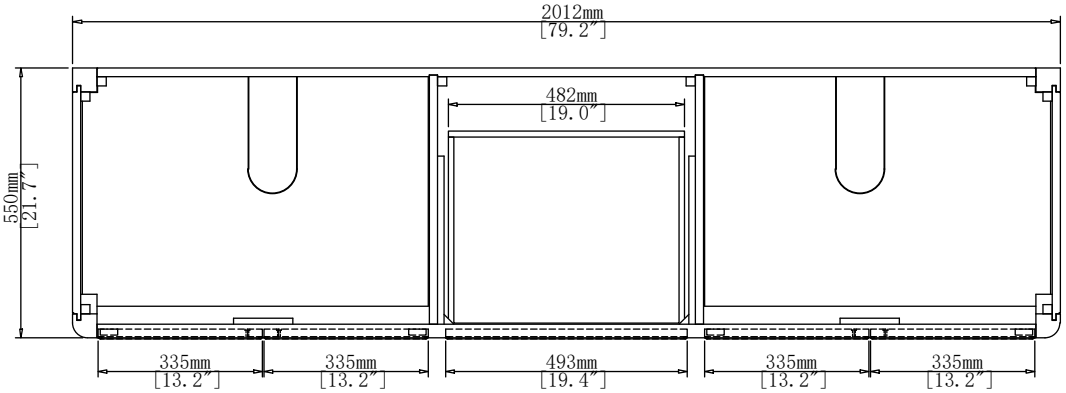

Side

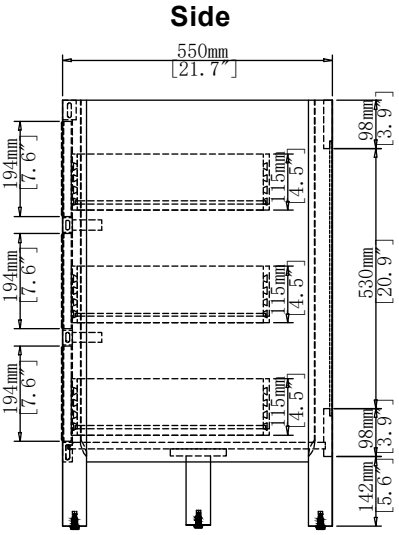

All dimensions and specifications are nominal and may vary.Use actual products for accuracy in critical situations.

VANITY TOP

With rectangular undermount sink

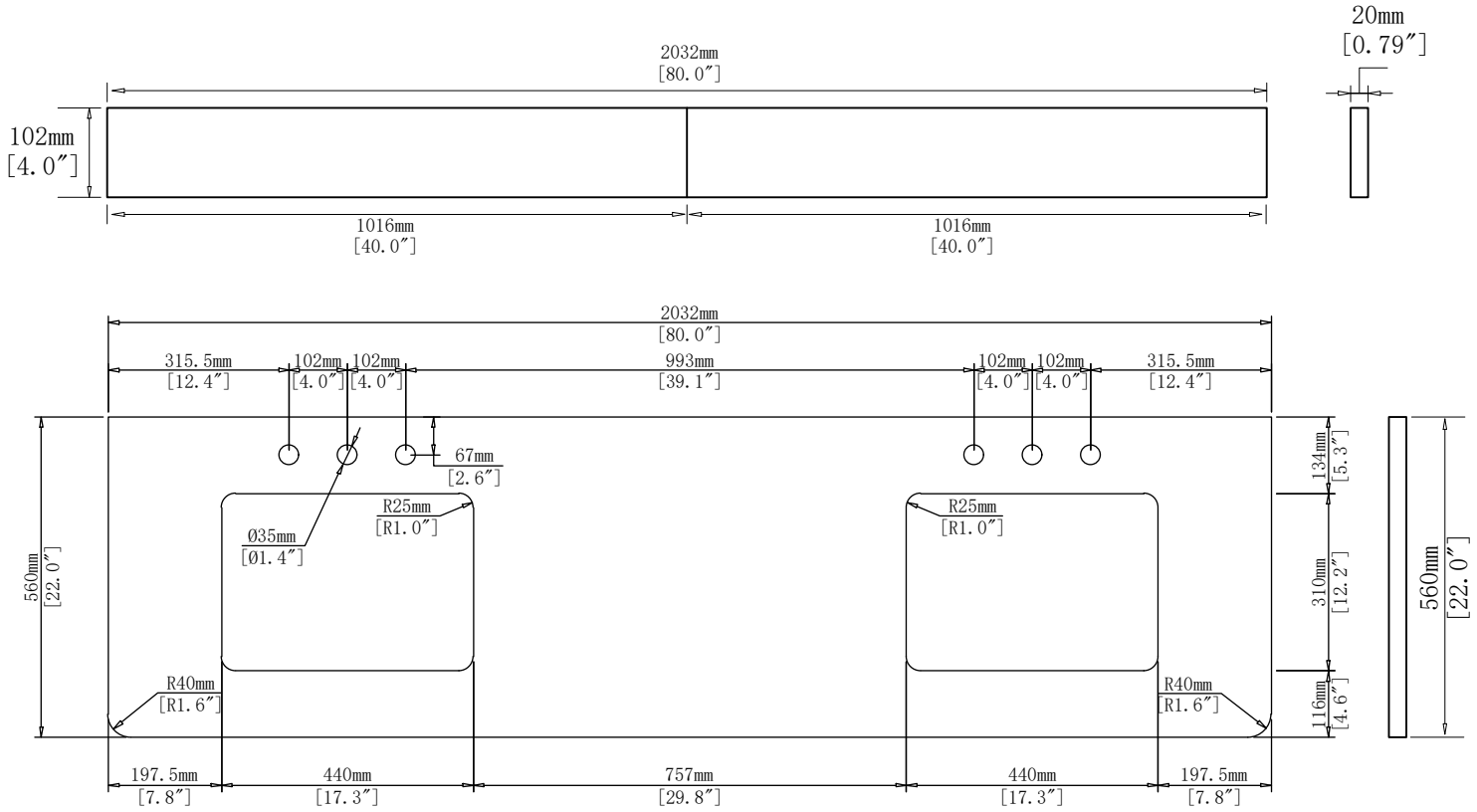

Undermount Sink

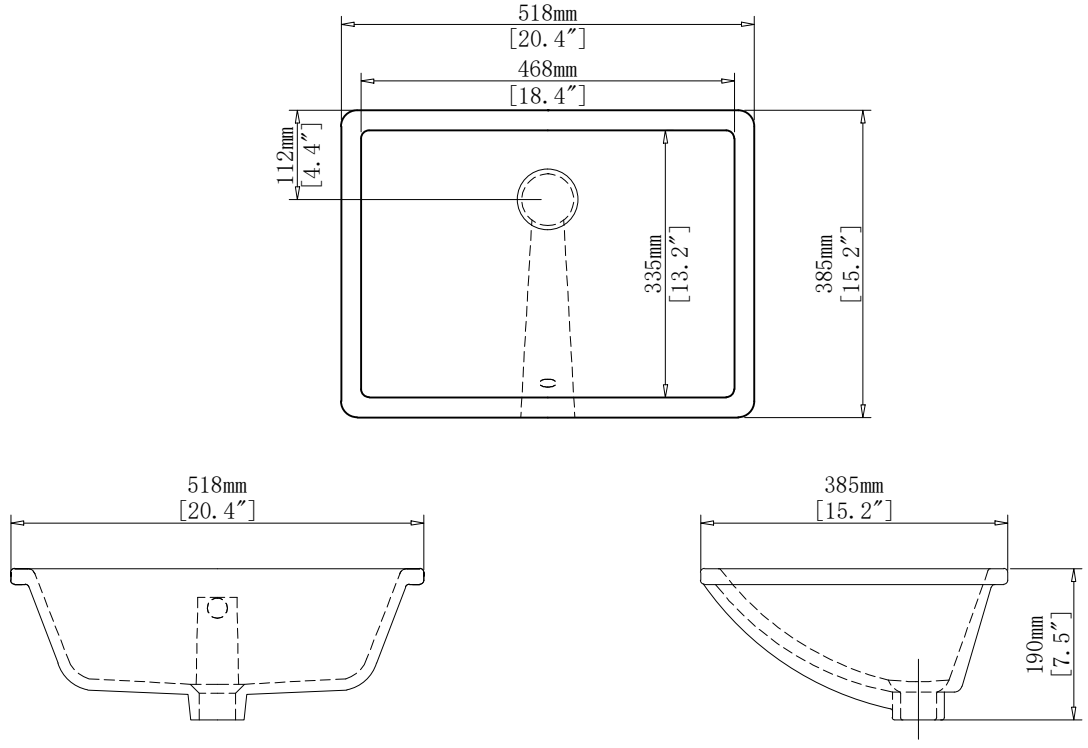

All dimensions and specifications are nominal and may vary.Use actual products for accuracy in critical situations.

Vanity Installation

SUGGESTED TOOLS AND MATERIALS:

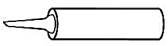
Sealant


Measuring tape


Safety glasses


Rag


Level

INSTALLATION INSTRUCTLONS

We recommend consulting a professional if you are unfamiliar with installing bathroom fixtures and plumbing .We accept no liability for any damage to the floor,plumbing,vanity cabinet,sink,counter top,or personal injury during installation.

1

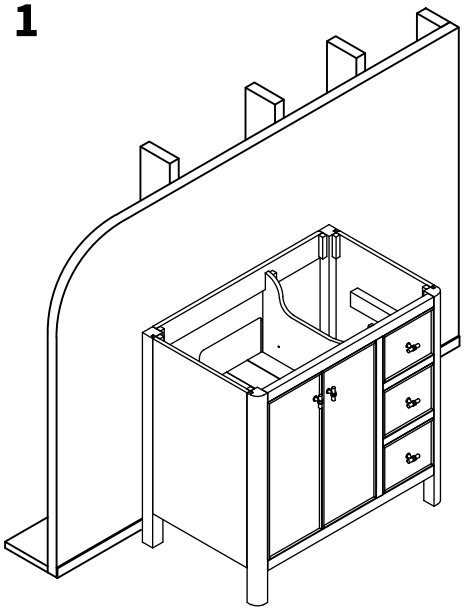

Remove vanity from box and examine vanity for any defects or damage.Carefully place vanity against wall.

2

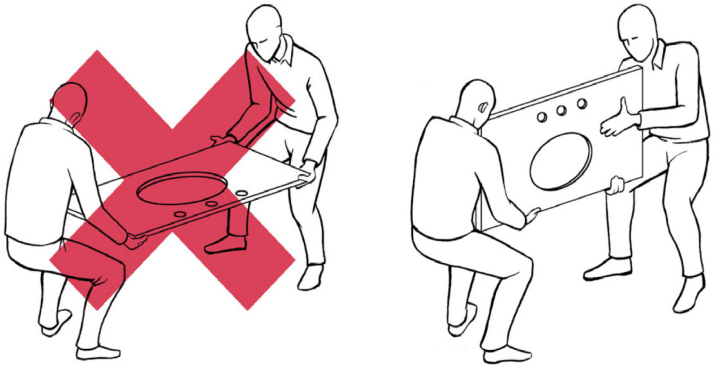

Always use a two man crew,a single person crew is much more likely to break or chip the stone top.

3

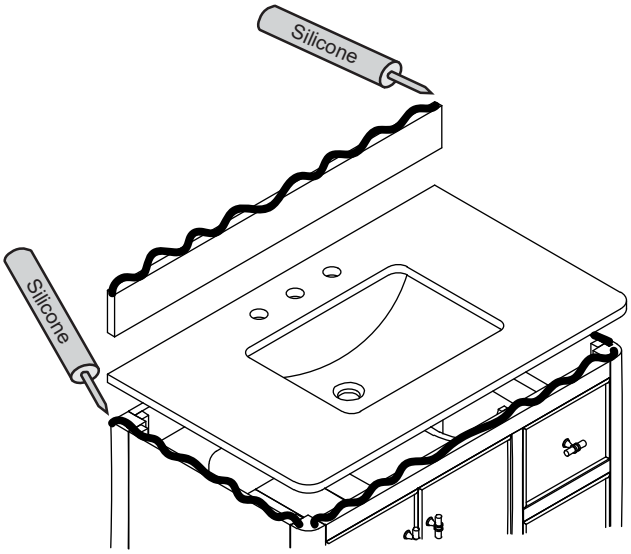

Apply bead of quality sealant evenly along the bottom of backsplash and the top of the vanity.

4

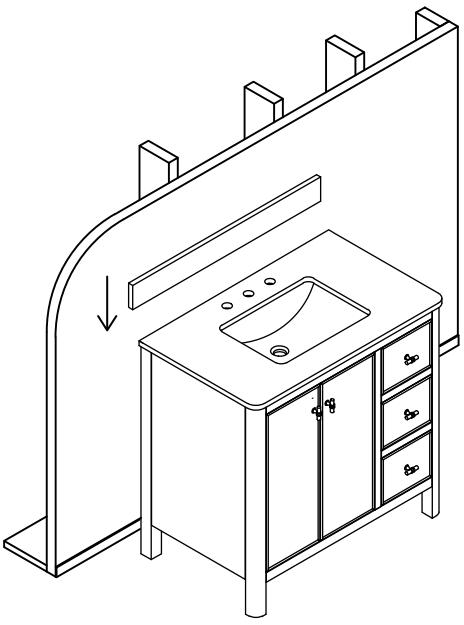

Finally,place the bottom side of back splash with sealant onto the counter top and check alignment of back splash.

Note:sink style,shape,countertop,vanity may vary from the picture above. Instructional purpose only