Assembly Instructions

Caution: You must read this before you proceed

Please look in the small box for hardware packs

Swing

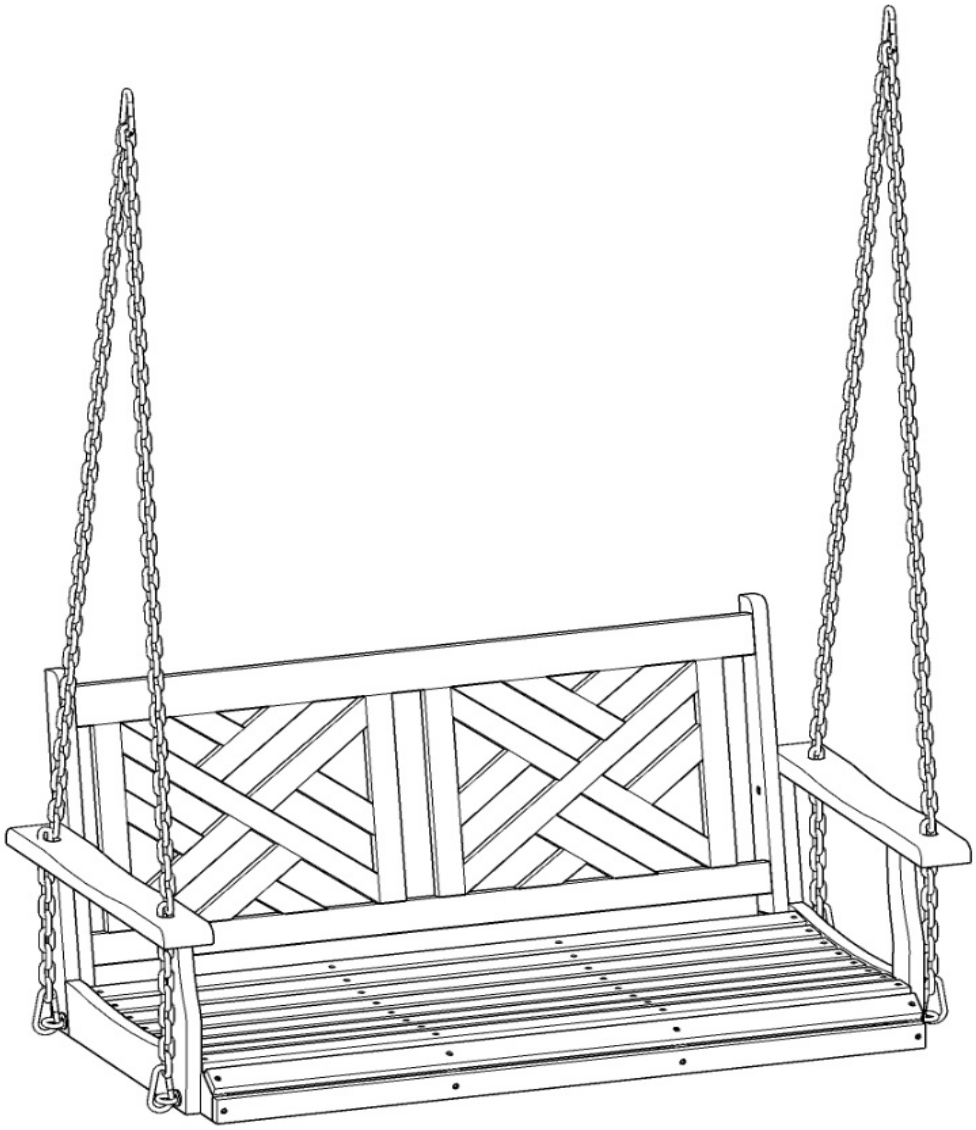

CAUTION: This Swing is NOT a TOY.
Keep your child / children at bay during the assembly process.
Whenever lifting or moving the Swing and to prevent damage to the Swing, two adults may be needed to execute these actions.

Parts List

Label	Picture	Description	QTY
A	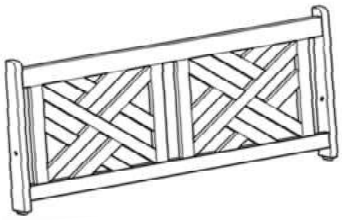	Backrest Panel	1
B	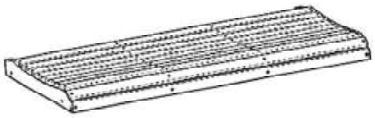	Seat Panel	1
C		Left Arm Panel	1
D	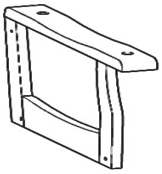	Right Arm Panel	1

Hardware

Label	Picture	Description	QTY
①		Screw (M6x90mm)	3
②		Bolt (M6x35mm)	3
③		Sleeve Nut (M6x15mm)	3
④		Lock Nut (M8)	5
⑤	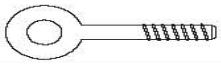	Eye Bolt (Ø8x60mm)	4
⑥		Chain (Ø5x2440mm)	4
⑦		Carabiner (M8)	6
⑧		Washer (Ø8,5/20x2mm)	9
⑨		Wrench (Ø17x2mm)	1
⑩		Allen Wrench	2

Assembly Preparation

Before Beginning Assembly:

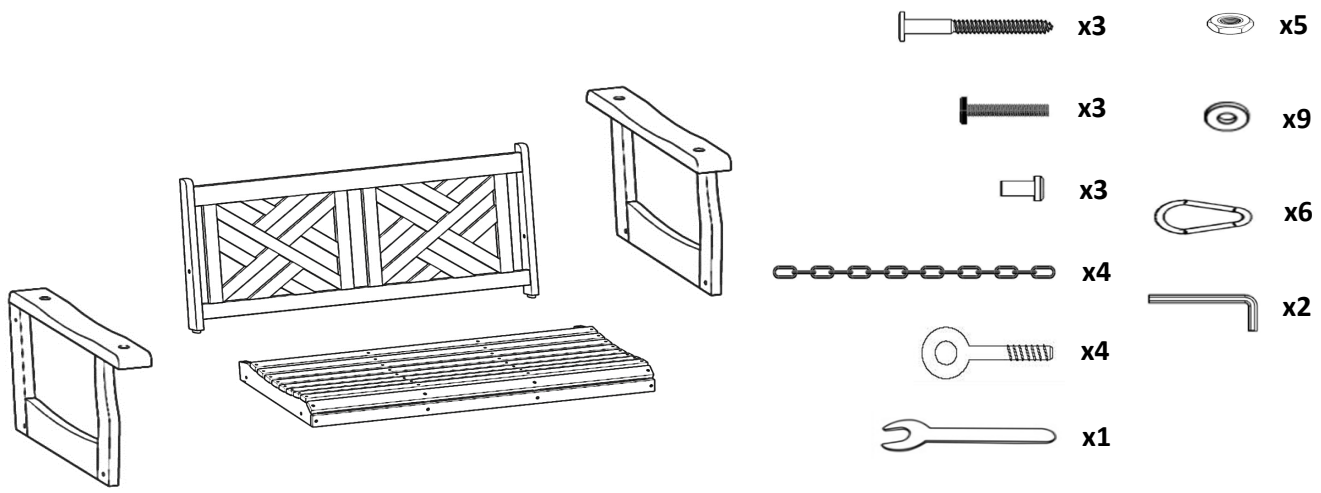

- Read instructions, cover to cover-
- Have 2 adults on hand for assembly-
- Do not assemble on flooring or carpet-
- Assemble on a clean non-marring surface (packing foam)-
- Save all packaging until finished-

Assembly Steps

Overview

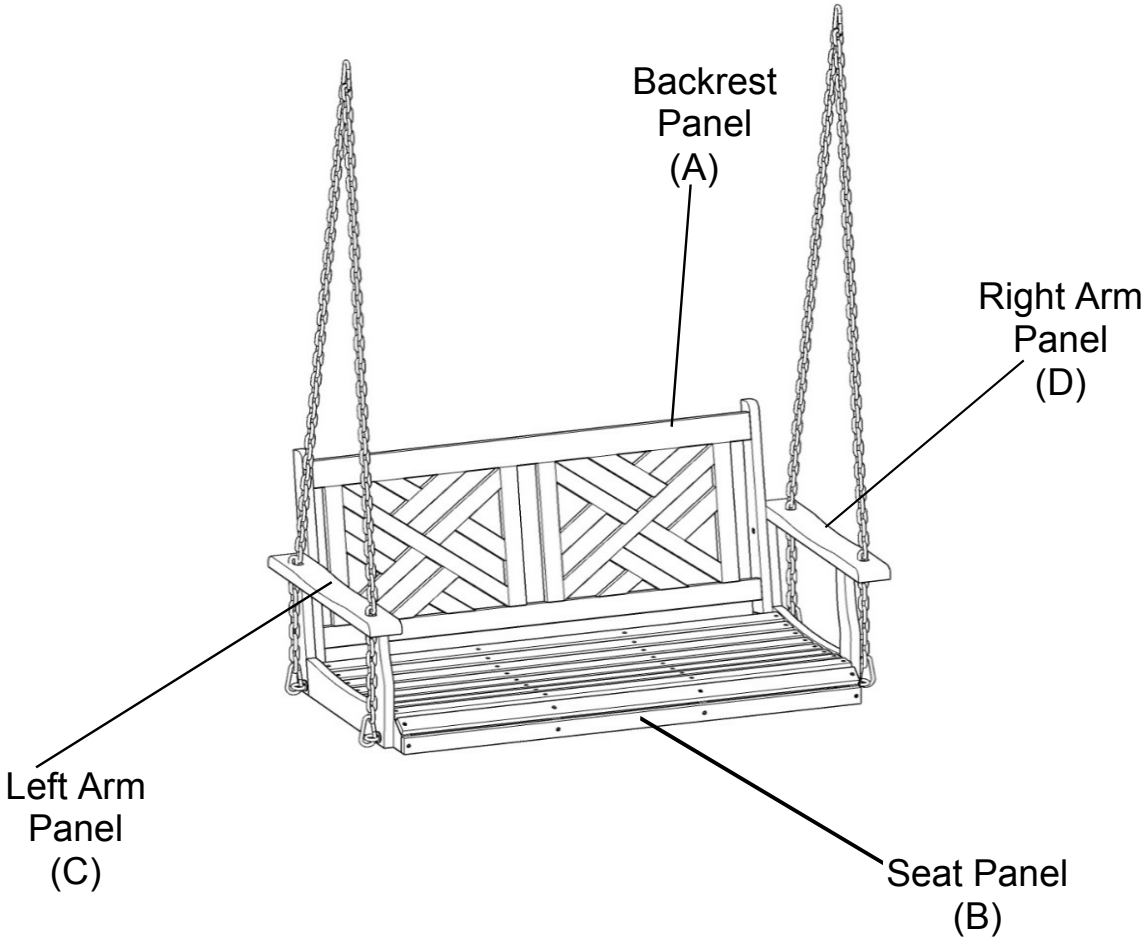

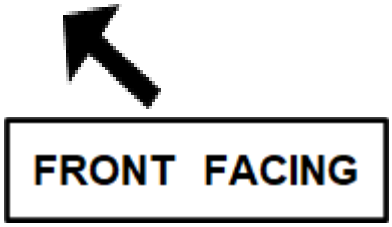

This Swing has multiple parts and may require up to 30 minutes to assemble. To give you an overview of the Swing, the above picture is to help you put the various parts into perspective. Please read through the instructions below to familiarise yourself with the parts and steps before assembly.

Step 1

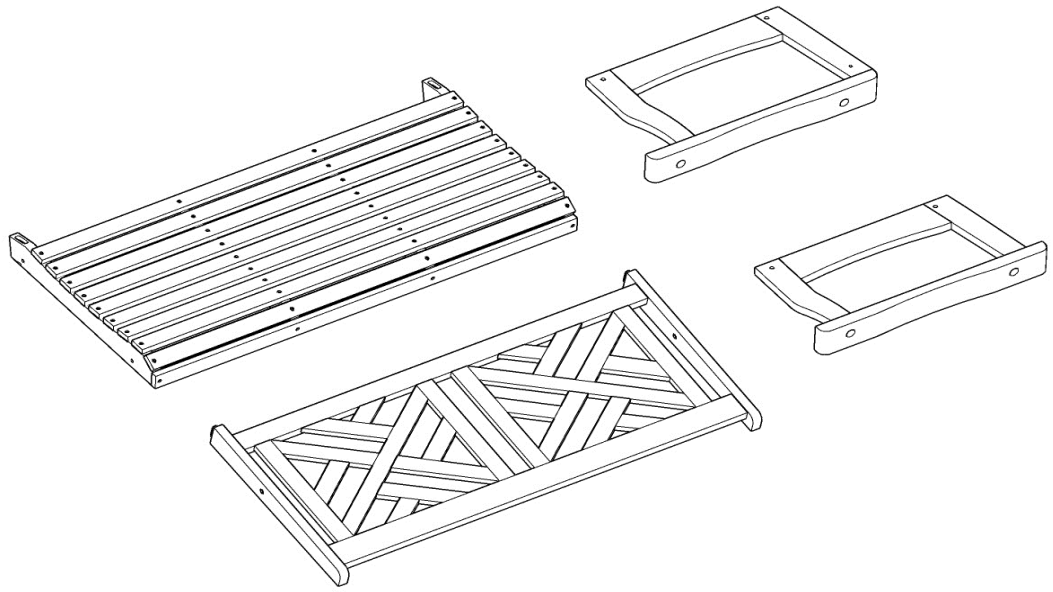

Unpack and place all parts on a clean, non-marring surface.

Step 2

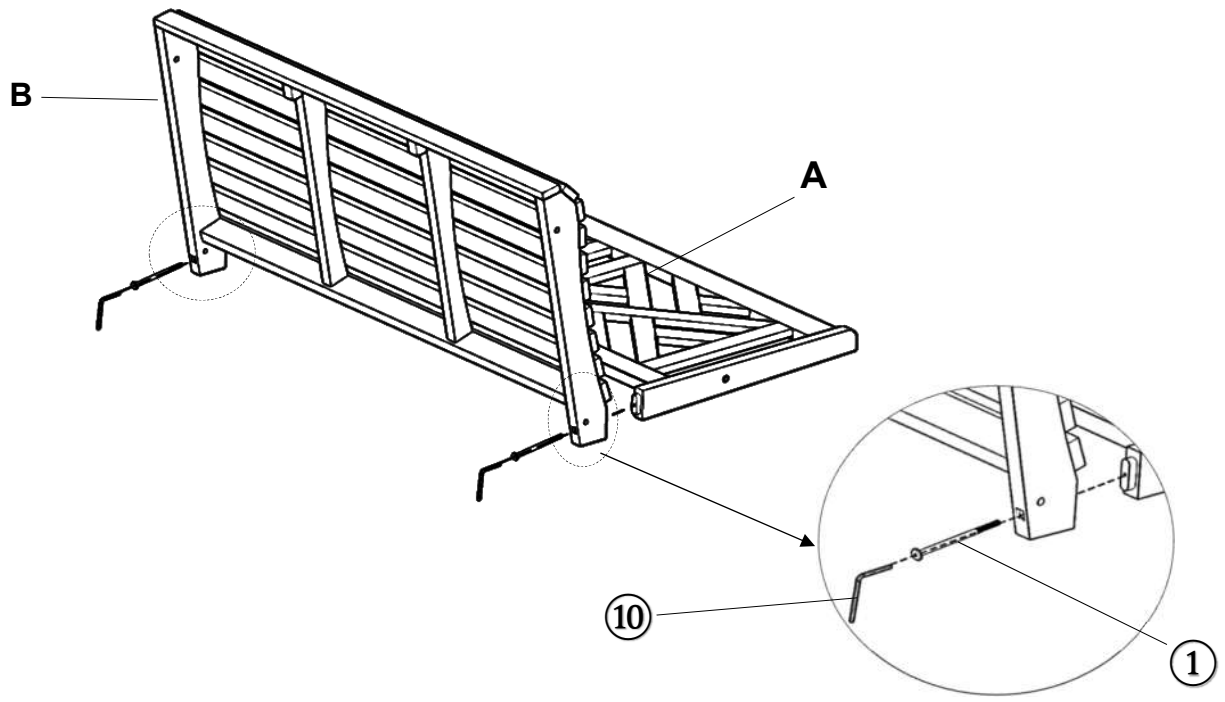

With the assistance from your adult partner, attach the Backrest Panel (A) to the Seat Panel (B) using Screws (1) and the Allen Wrench (10) as shown above. **Do not fully tighten the Screws.**

Step 3

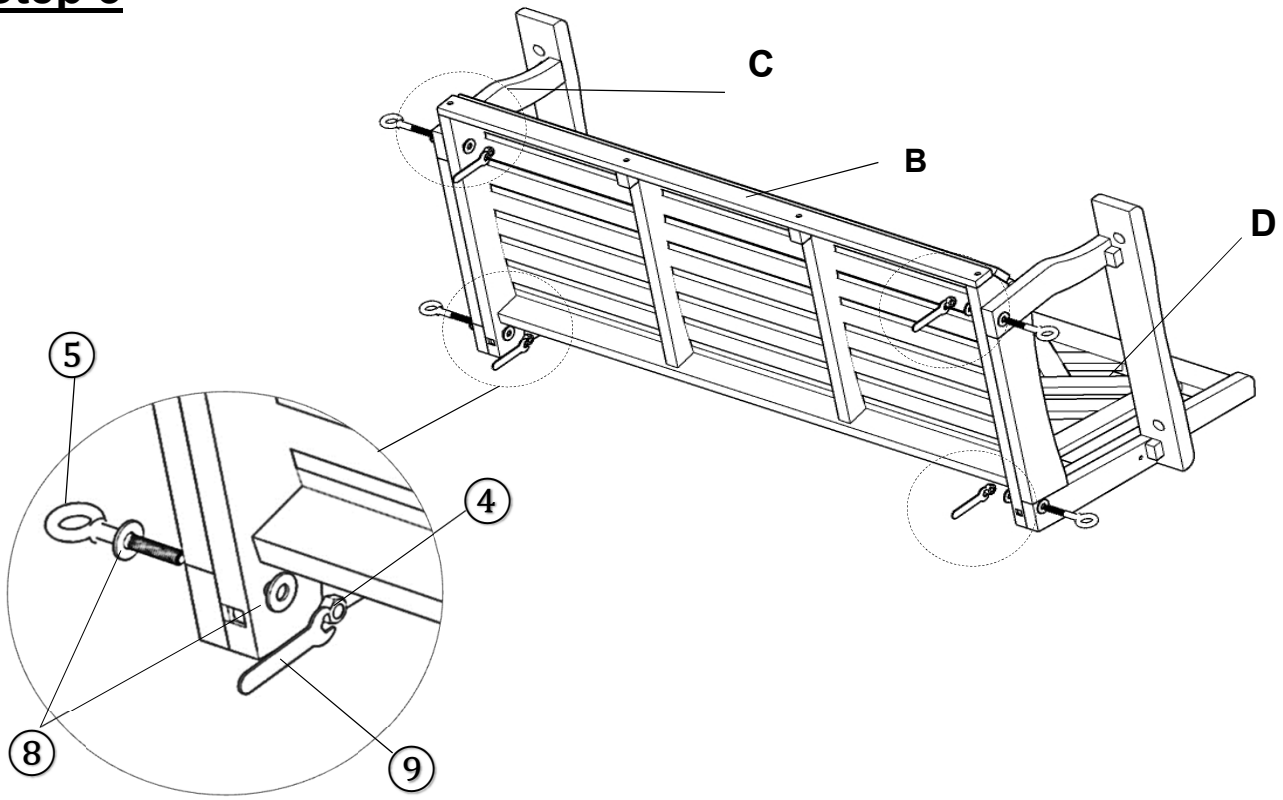

Insert the tenons of the Seat Panel (B) into the mortises of the Left Arm Panel (C) and the Right Arm Panel (D), then attach all three parts by using Lock Nuts (④), Washers (⑧), and Eye Bolts (⑤), with the Wrench (⑨) as shown above.

Do not fully tighten the Bolts.

Step 4

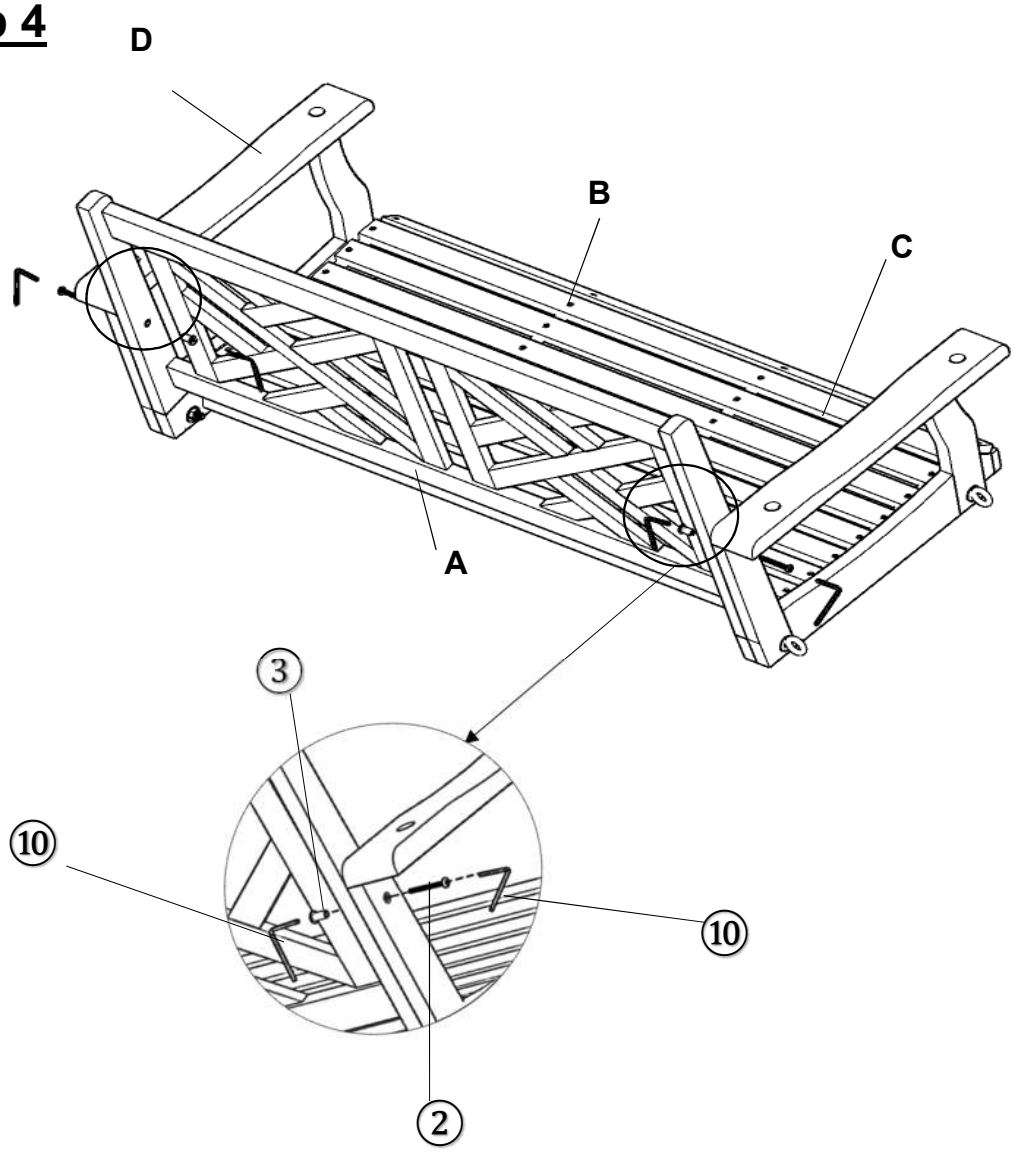

With the assistance from your adult partner, turn the Backrest Panel (A) in the assemble part of step 3 up as shown above.
Continuously attach the Backrest Panel (A) to the Left Arm Panel (C) and the Right Arm Panel (D) using Bolts (2) and Sleeve Nuts (3) with the Allen Wrench (10) as shown above.
Do not fully tighten the Bolts.

Step 5

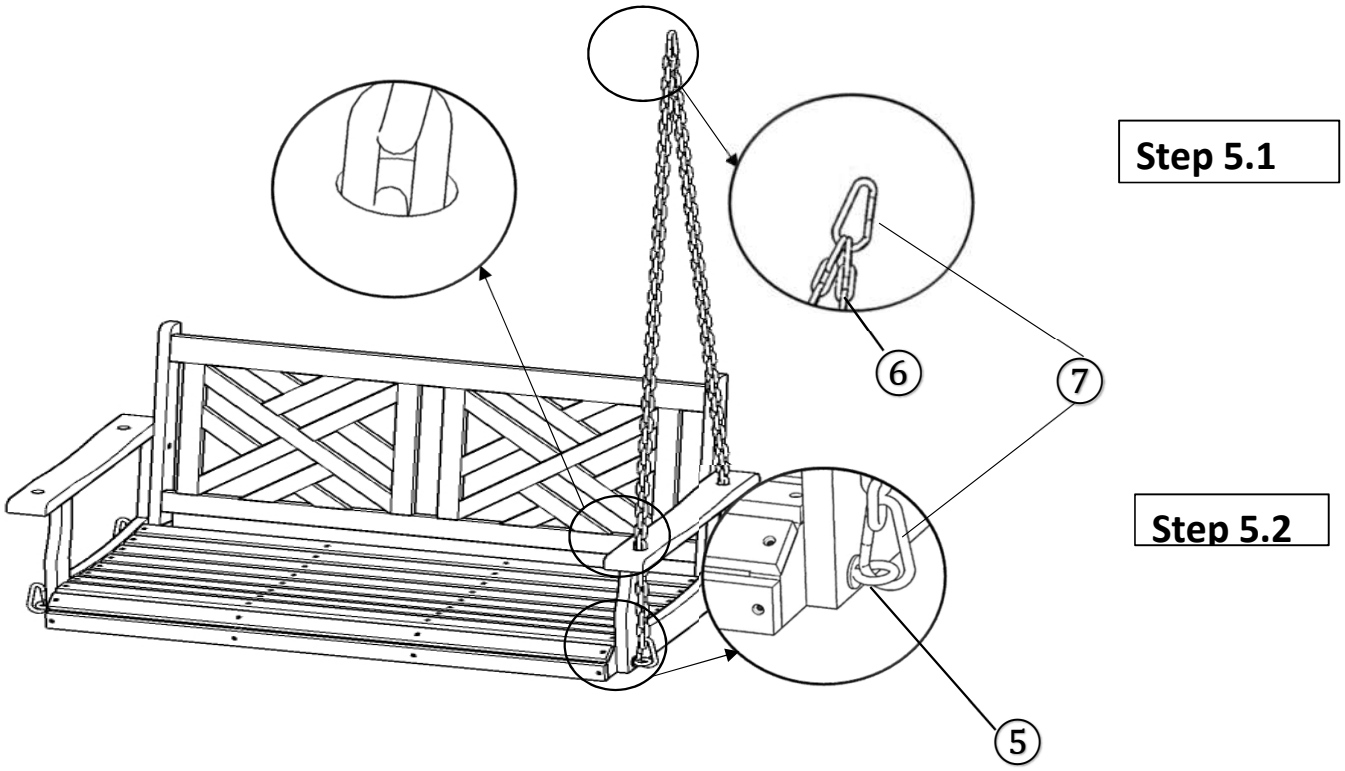

Step 5.1: Unscrew the connection on the Carabiner (⑦), then loop the Chain (⑥) onto the Carabiner (⑦), and screw the connection shut as shown above.

Note: The distance from the Carabiner (⑦) to the back of the Left Arm Panel (C) and the Right Arm Panel (D) is shorter than the distance from the Carabiner (⑦) to the front of the Left Arm Panel (C) and the Right Arm Panel (D).

Step 5.2: Align the Chain (⑥) through the holes of the Left Arm Panel (C) and the Right Arm Panel (D). Then lock the end of the Chain to the Eye Bolt (⑤) on the Left Arm Panel (C) and the Right Arm Panel (D) using the Carabiners (⑦)
Repeat the same process for the remaining Chain (⑥)

Step 6

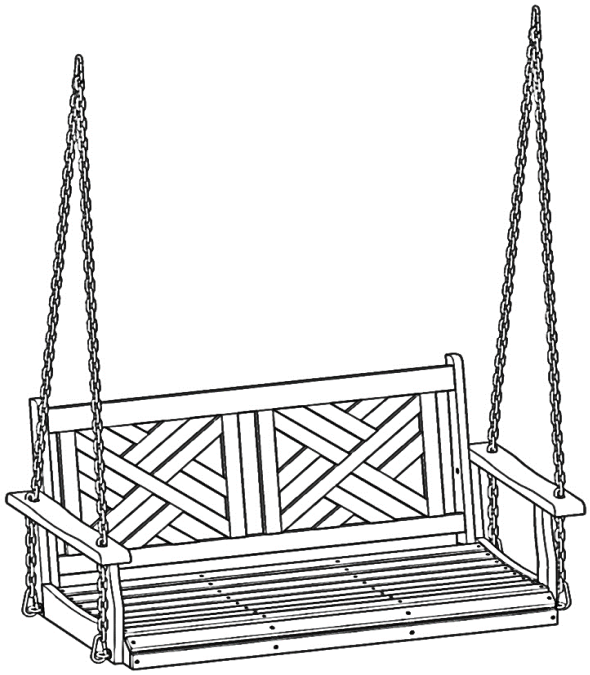

Then carefully sit onto the Swing.
This pressure will help the swing reach full alignment at all joints.
Then get off the Swing and proceed to tighten the Bolts and Screws in a sequential manner.
When tightening the Bolts and Screws, tighten sequentially.
DO NOT tighten any Bolt or Screw fully and then move on towards the next one.

Your Swing is ready for use.
This Swing can only be used on a flat, level surface.

Care & Maintenance

- Do not put hot items directly on furniture surface.
- Do not clean furniture with harsh cleansers or polish.
- To obtain the longest lifespan of your outdoor prodcts, minimizing exposure to direct sunlight is recommended.
- Children should not climb or jump on the furniture.
- Do not write on furniture without a padded barrier to protect the surface.
- To obtain the longest lifespan of your outdoor products, avoid extended and lengthy exposure to rain, snow, and direct sunshine. Whenever possible cover the product and /or place under patio or awnings.
- Not for commercial use. For residential use only.
- Stains may be removed with mild soap solution and damp cloth.
- Dust and pick-up spills using a clean, non-colored, lint-free cloth .